YAMAHA

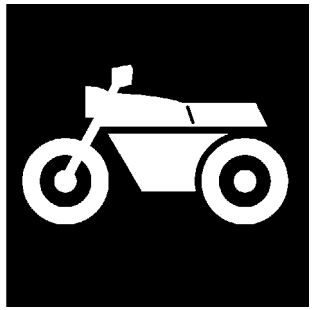

CATALOGO DE REPUESTOS

FZ1-N (2D1R) EUROPE

1J2D1-352S1

( )

YAMAHA GENUINE Parts & Accessories

FZ1-N
CATALOGO DE REPUESTOS
©2009 por Yamaha Motor Co., Ltd.
1ª edición, julio 2009
Todos los derechos reservados.
Toda reproducción o uso no autorizado
sin el consentimiento escrito de
Yamaha Motor Co., Ltd.
quedan expresamente prohibidos
Impreso en Japón.

PROLOGO

Este catálogo de repuestos corresponde a las piezas para el o los modelos que figuran en la página de portada. Al formular el pedido de repuestos, se ruega citar este catálogo y especificar correctamente el número y el nombre de las piezas.

1. Las modificaciones y agregados que se hayan realizado después de la edición de este Catálogo de Repuestos, serán anunciados en las Informaciones de Recambios.
   Es recomendable que se hagan las correcciones necesarias en el Catálogo de Repuestos de acuerdo con las Informaciones de Recambios.

2. Abreviaciones
   En este. Catálogo de Repuestos se emplean las siguientes abreviaciones.

   "UR" Usar el número de partes especificado
   "UN" Usar la cantidad necesaria
   "AP" Piezas sustitutivas
   "LM" Fabricación local (Hay que pedir los repuestos en las cercanías)
   "F#" Nº de bastidor (Nº aplicable a la máquina)
   "O/S" Sobredimensionado

3. La cantidad de componentes para el montaje
   - Los componentes, suministrados como conjunto, se describen con un punto (.) que precede al nombre del parte como se indica a continuación.
   - La numeración que aparece a la derecha de cada descripción indica la cantidad de partes por cada unidad de conjunto.

CODIGO Nº	DESCRIPCION	CANT.	OBSERVACIONES
2F5–83310–60	ENSAMBLAJE DE LA LUZ	2	
115–83311–60	.BOMBILLA (6V–18W)	1	

4. Los colores de los componentes se indican como sigue en la columna de "OBSERVACIONES".

CODIGO Nº	DESCRIPCION	CANT.	OBSERVACIONES
2N4–24110–00–X5	COMP. DEL TANQUE	2	MXR
3J1–24240–10	.GRAFICO, DEL TANQUE	1	PARA MXR

5. Debe tenerse en cuenta que las ilustraciones sirven como guia para la búsqueda de los números de partes y no deben usarse para el montaje. Durante el montaje, se recomienda usar el manual de taller correspondiente.

6. EL asterisco (*) antes del número de referencia indica los elementos modificados después de la primera edición.

7. Números de serie

Nº de Serie del motor

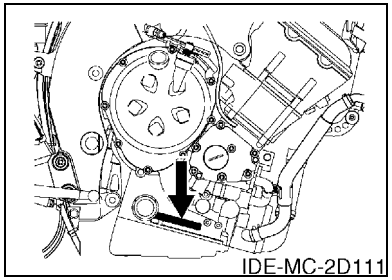

Nº de Serie del bastidor

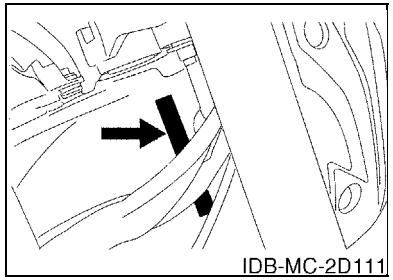

8. Códigos de color aplicables (El símbolo (*) muestra el color de modelo.)

Abreviatura	Nombre de color	Código de color
BWC1(*)	BLUISH WHITE COCKTAIL 1	0390
LGB	LOW GLOSS BLACK	0098
MBL2	MAT BLACK 2	0582
SMX(*)	BLACK METALLIC X	0903

ROTULO DE MODELO

(1) El rótulo llamada “Rótulo de Modelo” está en la ubicación indicada abajo en el (3). Cuando se utilice este catálogo de repuestos, se ruega cotejar entre el “código de modelo–número de código de producción” del catálogo y el “código de modelo–número de código de producción” indicado en el Rótulo de Modelo fijado en el producto correspondiente.

(2) Indicación del “Rótulo de Modelo”

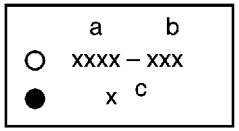

a: Código de tipo de Modelo

b: Número de código de Producción

c: Tipo de color

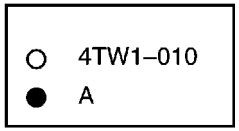

(3) Ubicación de fijación del Rótulo de Modelo

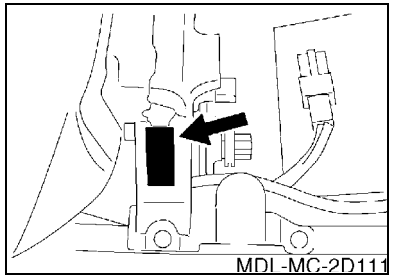

(4) Información de Color

Código de Modelo	Código de tipo de color	Código de color	Nombre de color	Abreviatura
2D1R	A	0903	BLACK METALLIC X	SMX
	B	0390	BLUISH WHITE COCKTAIL 1	BWC1

(5) Código de Modelo–Número de código de Producción del Modelo Listado en este Catálogo de Repuestos

Código de Modelo	Número de Código de Producción	País (destino)
2D1R	010	SPAIN

CONTENIDO

MOTOR

CULATA DE CILINDRO 1
CILINDRO 3
CIGUENAL & PISTON 4
VALVULA 5
ARBOL DE LEVAS & CADENA 7
BOMBA DE AGUA 8
RADIADOR & MANGUERA 10
BOMBA DE ACEITE 12
FILTRO ACEITE 13
ADMISION 14
ADMISION 2 15
SYSTEMA DE INDUCCION DE AIRE 17
DESCARGA 18
CARTER 19
CUBIERTA DE CARTER 1 20
ARRANQUE 22
EMBRAGUE 23
TRANSMISION 25
LEVA DE CAMBIO & HORQUILLA 27
EJE DE CAMBIO & PEDAL 28

SHASIS

CUADRO 29
GUARDABARRO 31
CUBIERTA LATERAL 33
BRAZO TRASERO 34
SUSPENSION TRASERO 36
DIRECCION 37
HORQUILLA DELANTERA 38
DEPOSITO DE COMBUSTIBLE 40
ASIENTO 42
RUEDA DELANTERA 43
CALIBRE FRENO DELANTERA 44
RUEDA TRASERA 45
CALIBRE FRENO TRASERA 47
MANILLAR & CABLE 48
CILINDRO MAESTRO DELANTERO 49
SOPORTE & APOYAPIE 50
CILINDRO MAESTRO TRASERO 53
GENERADOR 54
MOTOR DE ARRANQUE 55
LUZ DE DESTELLADOR 56
MEDIDOR 57
FARO DELANTERO 58
LUZ DE COLA 59
INTERRUPTOR DE MANILLAR&PALANC 60
EQUIPO ELECTRICO 1 61
EQUIPO ELECTRICO 2 63

INDICE

INDICE NUMERICO 65

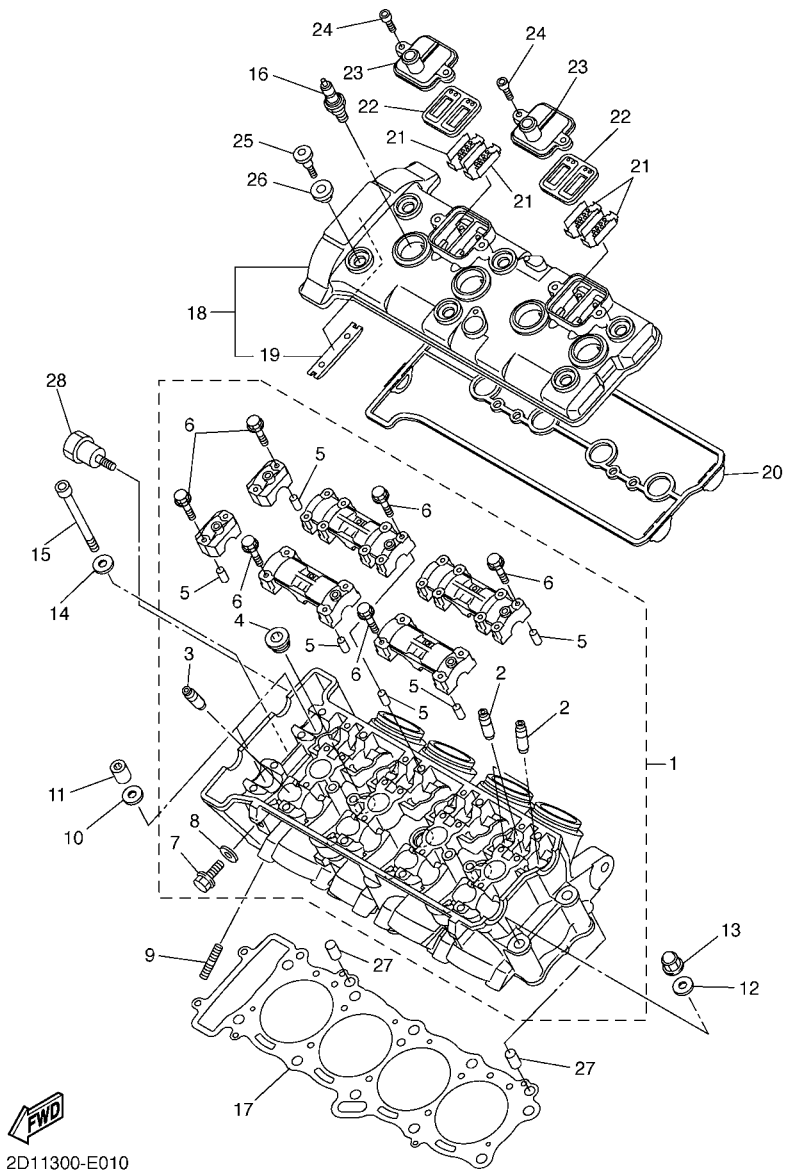

FIG. 1 CULATA DE CILINDRO

REF. Nº	CODIGO Nº	DESCRIPCION	2D1R					OBSERVACIONES
1	5VY–11101–20	CULATA DE CILINDRO COMPLETA	1					
2	5VY–11133–10	.GUIA DE VALVULA 1	12					
3	5VY–11134–10	.GUIA DE VALVULA 2	8					
4	90340–18002	.TORNILLO, DE DRENAJE	3					
5	91808–16023	.PASADOR DE CLAVIJA	12					
6	90105–06026	.TORNILLO	28					
7	95024–06012	.PERNO, BRIDA	1					
8	90430–06014	.JUNTA	1					
9	95612–08625	TUERCA U	8					
10	90201–10033	ARANDELA PLANA	8					
11	90179–10006	TUERCA	8					
12	90201–10033	ARANDELA PLANA	2					
13	90176–10075	TUERCA CORONA	2					
14	90201–06034	ARANDELA PLANA	2					
15	91314–06105	TORNILLO ALLEN	2					
16	94701–00403	BUJIA (NGK CR9EK)	4					
17	2D1–11181–00	JUNTA, DE CULATA 1	1					
18	5VY–11191–02	TAPA CULATA DE CILINDRO 1	1					
19	5BE–12241–00	.TOPE DE GUIA 2	1					
20	5VY–11193–10	EMPAQUE	1					
21	5VY–1482K–00	PLACA	4					
22	5SL–14890–10	VALVULA DE LENGUETA COMPLETA	2					
23	5VY–14899–00	TAPA, DE CAJA	2					
24	90110–06178	TORNILLO ALLEN	4					
25	90109–066F0	PERNO	6					
26	5VY–1111G–00	CASQUILLO DE GOMA	6					
27	99530–10114	PASADOR, DE ESPIGA	2					

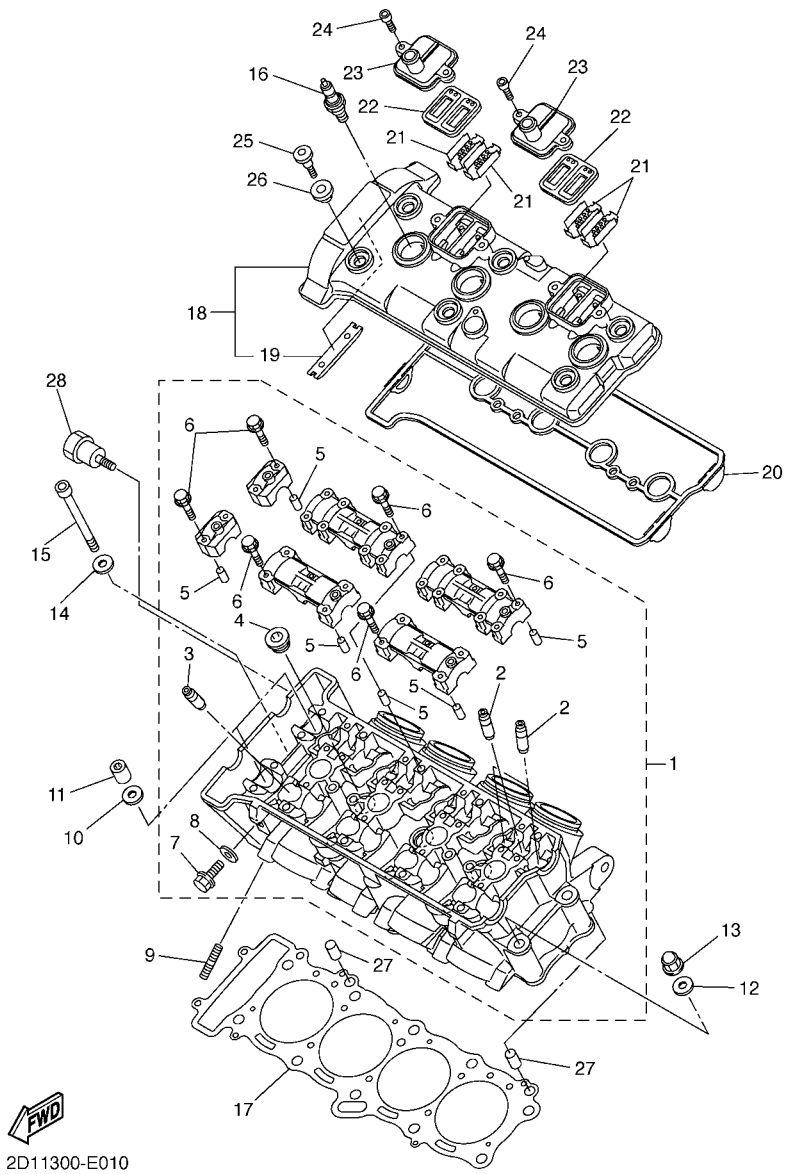

FIG. 1 CULATA DE CILINDRO

REF. Nº	CODIGO Nº	DESCRIPCION	2D1R					OBSERVACIONES
28	2D1–11026–00	PERNO	1					

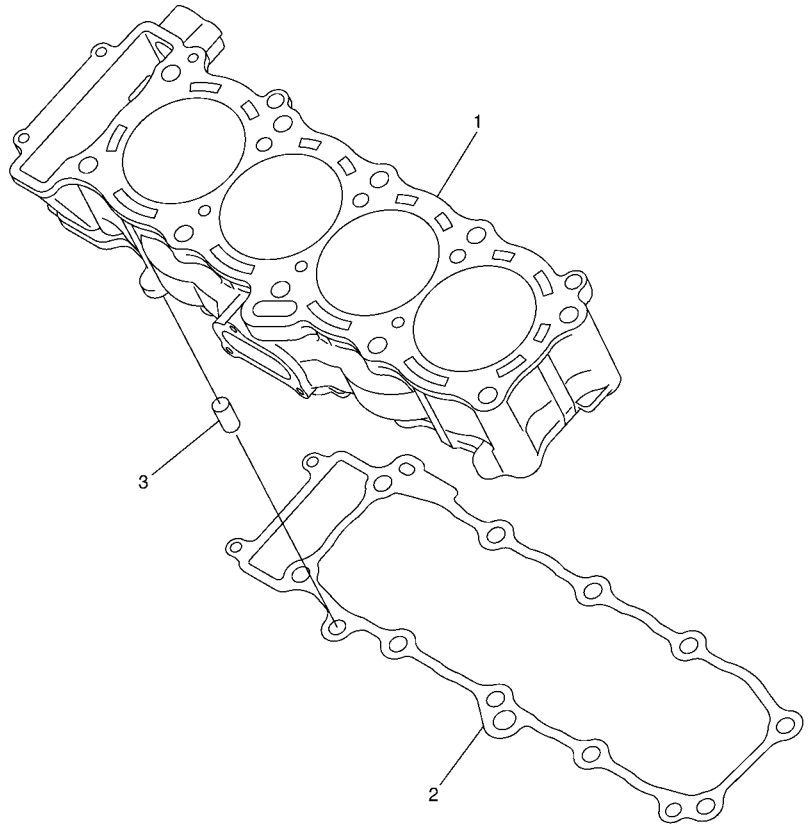

5VY1300-C020

FIG. 2 CILINDRO

REF. Nº	CODIGO Nº	DESCRIPCION	2D1R					OBSERVACIONES
1	5VY–11311–10	CILINDRO 1	1					
2	5VY–11351–00	JUNTA, DE CILINDRO	1					
3	99530–10114	PASADOR, DE ESPIGA	2					

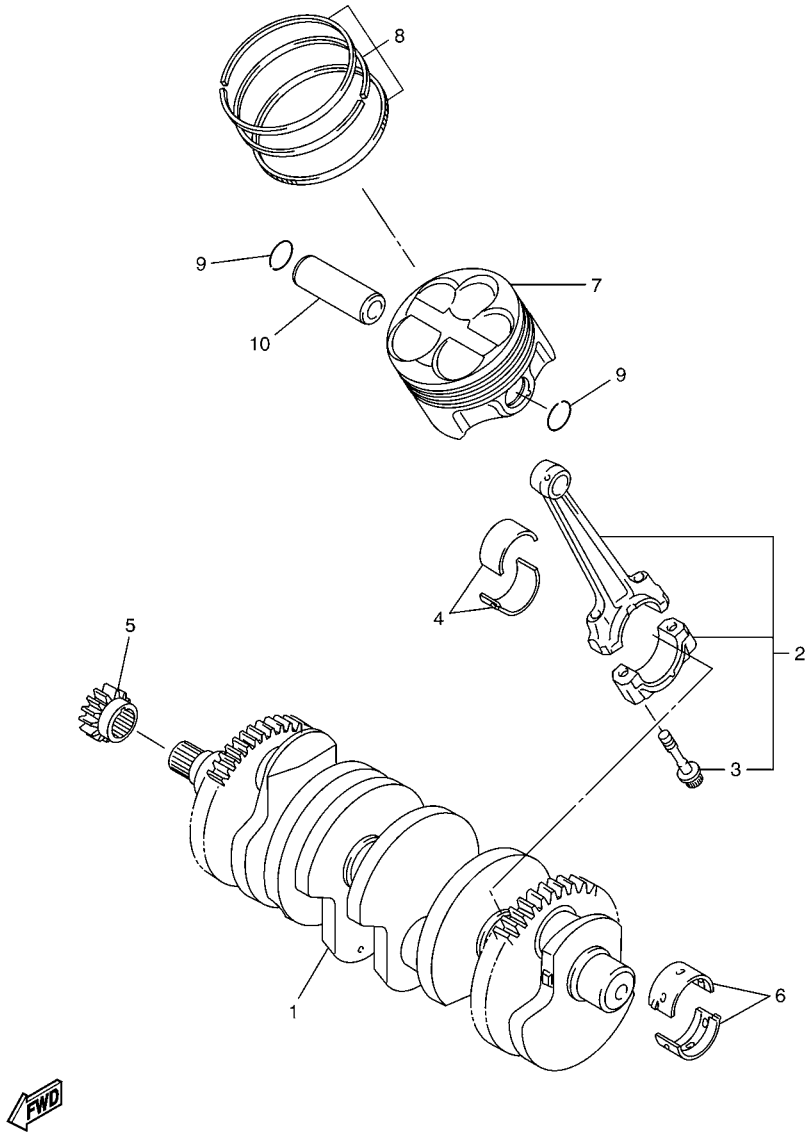

FIG. 3 CIGUENAL & PISTON

REF. Nº	CODIGO Nº	DESCRIPCION	2D1R					OBSERVACIONES
1	2D1–11411–00	CIGUENAL	1					
2	14B–11650–00	BIELA COMPLETA	4					
3	5VY–11654–01	.TORNILLO DE BIELA	2					
4	2D1–11656–00	COJINETE PLANO	8					UR AZUL
	2D1–11656–10	COJINETE PLANO	8					UR NEGRO
	2D1–11656–20	COJINETE PLANO	8					UR MARRON
	2D1–11656–30	COJINETE PLANO	8					UR VERDE
5	5VY–11549–00	CATALINA CADENA DE LEVA	1					
6	5VY–11416–A0	COJINETE PLANO 1	10					UR BLANCO
	5VY–11416–00	COJINETE PLANO 1	10					UR AZUL
	5VY–11416–10	COJINETE PLANO 1	10					UR NEGRO
	5VY–11416–20	COJINETE PLANO 1	10					UR MARRON
	5VY–11416–30	COJINETE PLANO 1	10					UR VERDE
7	5VY–11631–10	PISTON (NORMA)	4					
8	5VY–11603–01	JUEGO DE ANILLOS (NORMA)	4					
9	93450–18157	SEGURO	8					
10	5VY–11633–00	PASADOR, PISTON	4					

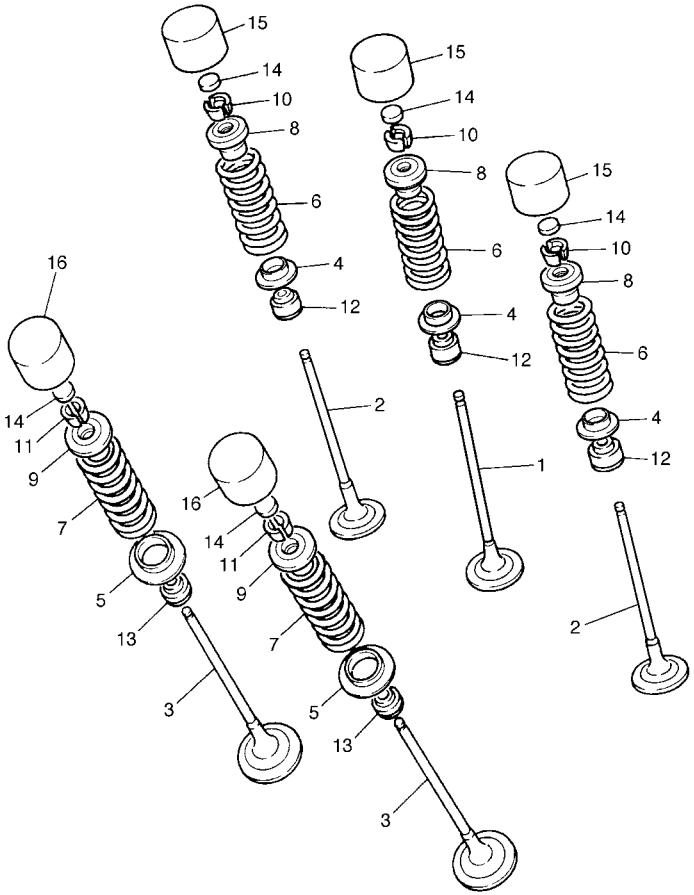

5VY1300-C040

FIG. 4 VALVULA

REF. Nº	CODIGO Nº	DESCRIPCION	2D1R					OBSERVACIONES
1	2D1–12111–00	VALVULA DE ADMISION	4					
2	2D1–12112–00	VALVULA, DE ADMISION 2	8					
3	5VY–12121–00	VALVULA DE ESCAPE	8					
4	5NL–12116–00	ASIENTO RESORTE DE VALVULA	12					
5	3GM–12126–00	ASIENTO RESORTE DE VALVULA2	8					
6	2D1–12113–00	RESORTE VALVULA INTERNA	12					
7	2D1–12114–00	RESORTE VALVULA EXTERIOR	8					
8	1HX–12117–00	RETEN RESORTE DE VALVULA	12					
9	1WG–12117–00	RETEN RESORTE DE VALVULA	8					
10	1HX–12118–00	SEGURO DE VALVULA	24					
11	1WG–12118–00	SEGURO DE VALVULA	16					
12	4TV–12119–00	SELLO DE ACEITE VALVULA	12					
13	4SV–12119–00	SELLO DE ACEITE VALVULA	8					
14	1HX–12168–00	COJIN, AJUSTADOR 2 (1.20)	20					UR
	1HX–12168–20	COJIN, AJUSTADOR 2 (1.25)	20					UR
	1HX–12168–40	COJIN, AJUSTADOR 2 (1.30)	20					UR
	1HX–12168–60	COJIN, AJUSTADOR 2 (1.35)	20					UR
	1HX–12168–80	COJIN, AJUSTADOR 2 (1.40)	20					UR
	1HX–12168–A0	COJIN, AJUSTADOR 2 (1.45)	20					UR
	1HX–12168–F0	COJIN, AJUSTADOR 2 (1.50)	20					UR
	1HX–12168–H1	COJIN, AJUSTADOR 2 (1.55)	20					UR
	1HX–12168–K1	COJIN, AJUSTADOR 2 (1.60)	20					UR
	1HX–12168–M1	COJIN, AJUSTADOR 2 (1.65)	20					UR
	1HX–12168–R1	COJIN, AJUSTADOR 2 (1.70)	20					UR
	1HX–12168–U1	COJIN, AJUSTADOR 2 (1.75)	20					UR
	1HX–12168–W1	COJIN, AJUSTADOR 2 (1.80)	20					UR
	1HX–12168–Y1	COJIN, AJUSTADOR 2 (1.85)	20					UR

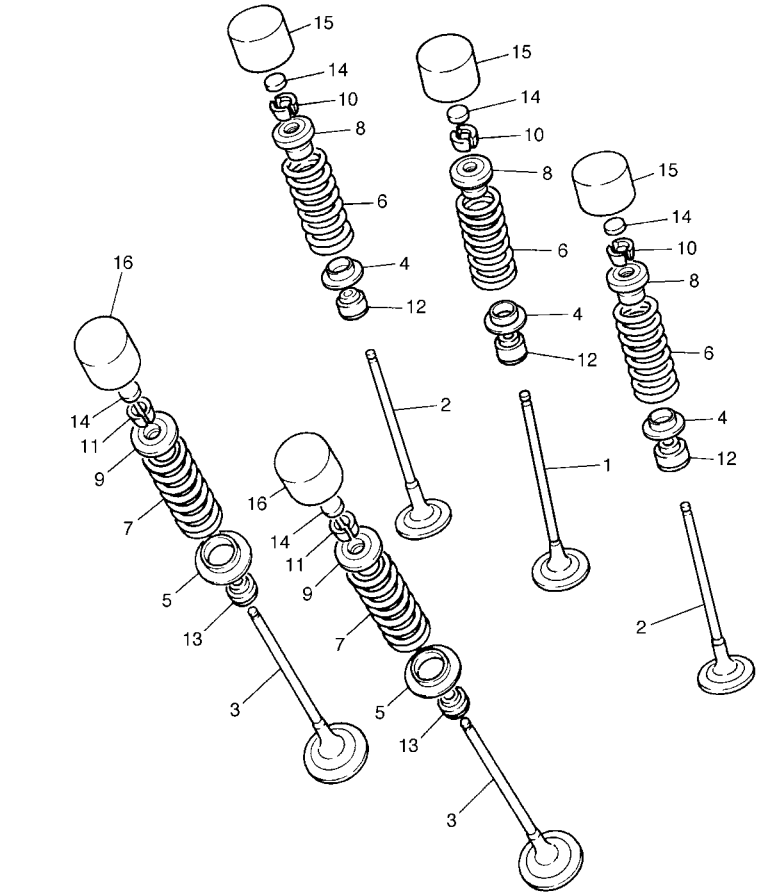

5VY1300-C040

FIG. 4 VALVULA

REF. Nº	CODIGO Nº	DESCRIPCION	2D1R					OBSERVACIONES
14	1HX–12169–11	COJIN, AJUSTADOR 2 (1.90)	20					UR
	1HX–12169–31	COJIN, AJUSTADOR 2 (1.95)	20					UR
	1HX–12169–50	COJIN, AJUSTADOR 2 (2.00)	20					UR
	1HX–12169–70	COJIN, AJUSTADOR 2 (2.05)	20					UR
	1HX–12169–90	COJIN, AJUSTADOR 2 (2.10)	20					UR
	1HX–12169–E0	COJIN, AJUSTADOR 2 (2.15)	20					UR
	1HX–12169–G0	COJIN, AJUSTADOR 2 (2.20)	20					UR
	1HX–12169–J0	COJIN, AJUSTADOR 2 (2.25)	20					UR
	1HX–12169–L0	COJIN, AJUSTADOR 2 (2.30)	20					UR
	1HX–12169–N0	COJIN, AJUSTADOR 2 (2.35)	20					UR
	1HX–12169–T0	COJIN, AJUSTADOR 2 (2.40)	20					UR
15	3LN–12153–20	LEVANTADOR DE VALVULA	12					UR AZUL
	3LN–12153–30	LEVANTADOR DE VALVULA	12					UR ROJO
	3LN–12153–09	LEVANTADOR DE VALVULA (O/S)	12					UR VERDE
16	3FV–12153–20	LEVANTADOR DE VALVULA	8					UR AZUL
	3FV–12153–30	LEVANTADOR DE VALVULA	8					UR ROJO
	3FV–12153–09	LEVANTADOR DE VALVULA (O/S)	8					UR VERDE

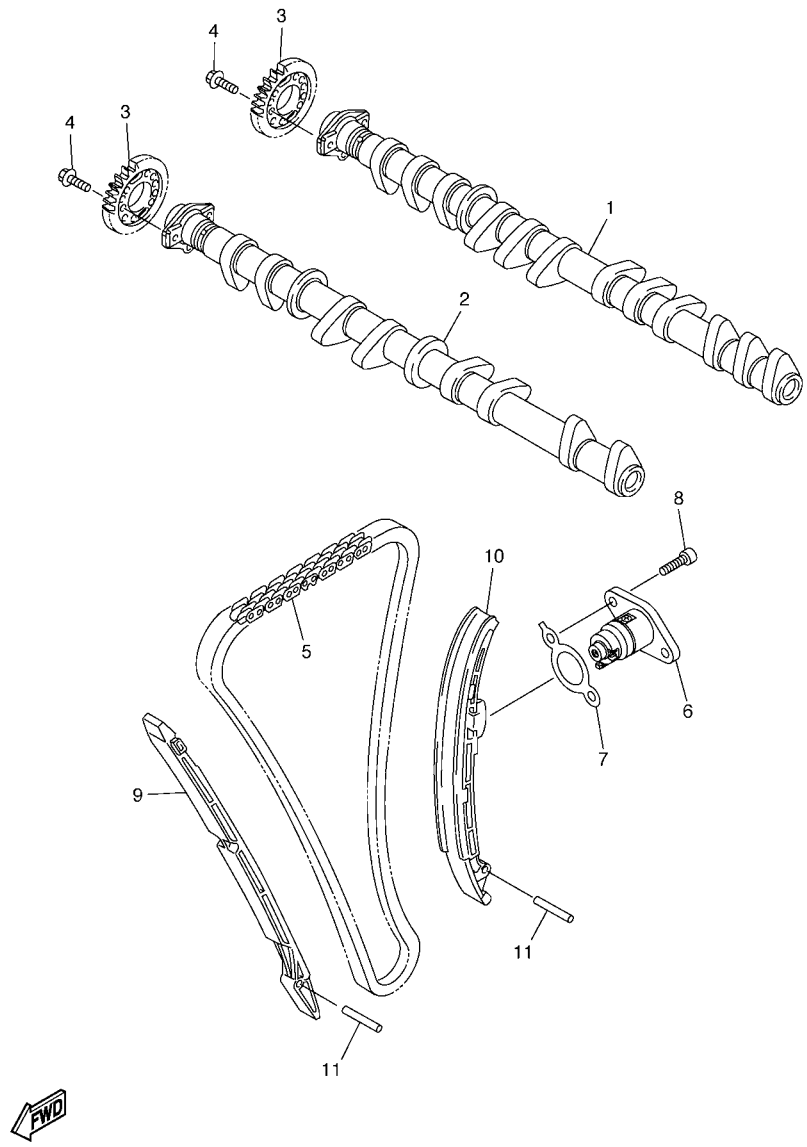

5VYE300-E050

FIG. 5 ARBOL DE LEVAS & CADENA

REF. Nº	CODIGO Nº	DESCRIPCION	2D1R					OBSERVACIONES
1	2D1–12170–00	ARBOL DE LEVAS COMPLETO 1	1					
2	2D1–12180–10	ARBOL DE LEVAS COMPLETO 2	1					
3	14B–12176–00	CATALINA DE CADENA	2					
4	90105–07006	TORNILLO	4					
5	94591–60122	CADENA	1					
6	5VY–12210–20	TENSOR CADENA DE LEVA	1					
7	2D1–12213–00	EMPAQUE DE CAJA TENSOR	1					
8	91314–06020	TORNILLO ALLEN	2					
9	5VY–12251–00	AMORTIGUADOR CADENA 1	1					
10	5VY–12252–01	AMORTIGUADOR CADENA 2	1					
11	93607–44002	PASADOR DE CLAVIJA	2					

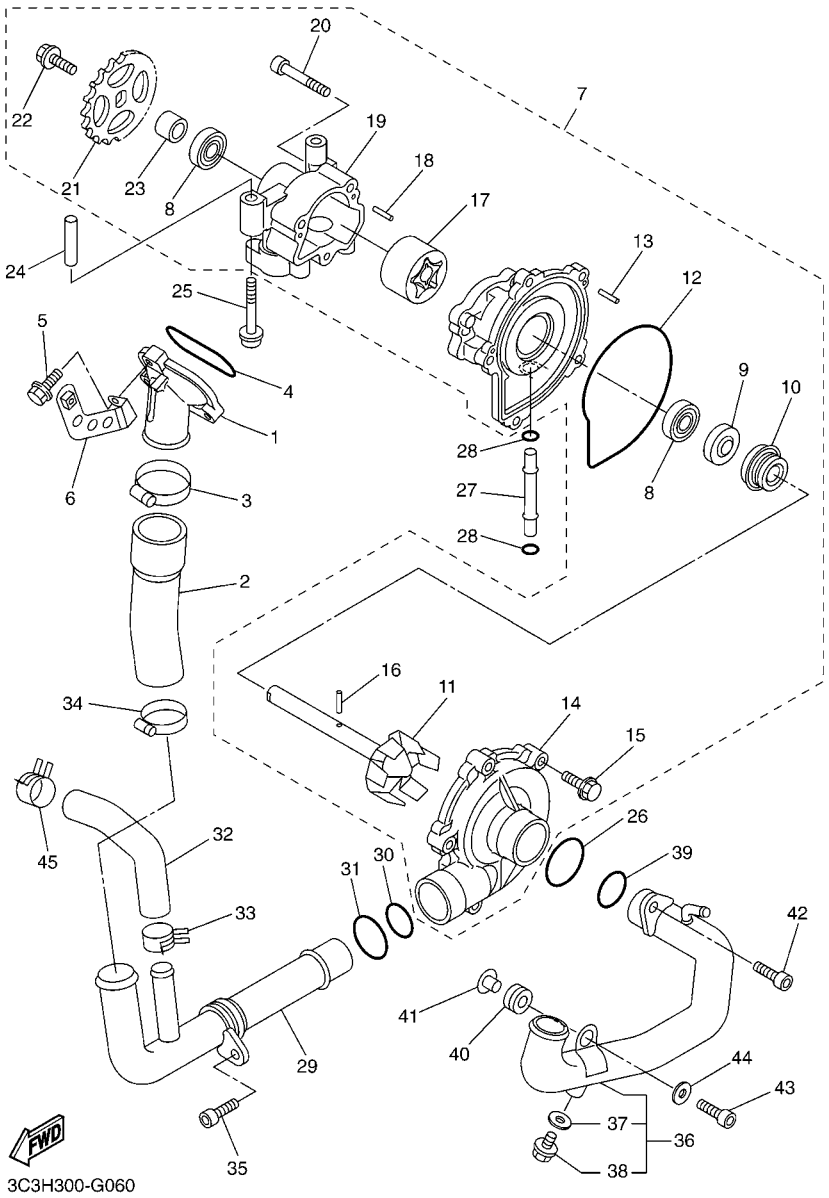

FIG. 6 BOMBA DE AGUA

REF. Nº	CODIGO Nº	DESCRIPCION	2D1R					OBSERVACIONES
1	5VY–12469–00	CONDUCTO	1					
2	5VY–12576–00	MANGUERA 1	1					
3	90450–38040	BRIDA, MANGUERA	1					
4	93210–47675	ANILLO O	1					
5	95024–06025	PERNO, BRIDA	3					
6	2D1–12637–00	SOPORTE 1	1					
7	4C8–12420–00	BOMBA DE AGUA COMPLETA	1					
8	93306–00106	.COJINETE	2					
9	93102–12372	.SELLO ACEITE	1					
10	4C8–12438–00	.SELLO MECANICO	1					
11	5VY–12450–11	.EJE IMPULSOR COMPLETO	1					
12	4XV–12439–00	.ANILLO O	1					
13	93603–12007	.PASADOR DE CLAVIJA	2					
14	5VY–12422–00	.CUBIERTA DE CAJA	1					
15	90105–06065	.TORNILLO	5					
16	93603–17070	.PASADOR DE CLAVIJA	1					
17	5VY–13310–10	.ROTOR COMPLETO 1	1					
18	93603–12007	.PASADOR DE CLAVIJA	2					
19	5VY–13336–00	.CAJA DE ROTOR	1					
20	91312–06040	.TORNILLO	3					
21	5VY–13355–00	.CATALINA IMPULSADA	1					
22	90105–06066	.TORNILLO	1					
23	5VY–12456–10	.ARANDELA	1					
24	91808–30031	PASADOR DE CLAVIJA	1					
25	90110–06167	TORNILLO ALLEN	2					
26	93210–357A2	ANILLO O	1					
27	4XV–12485–00	TUBO 5	1					

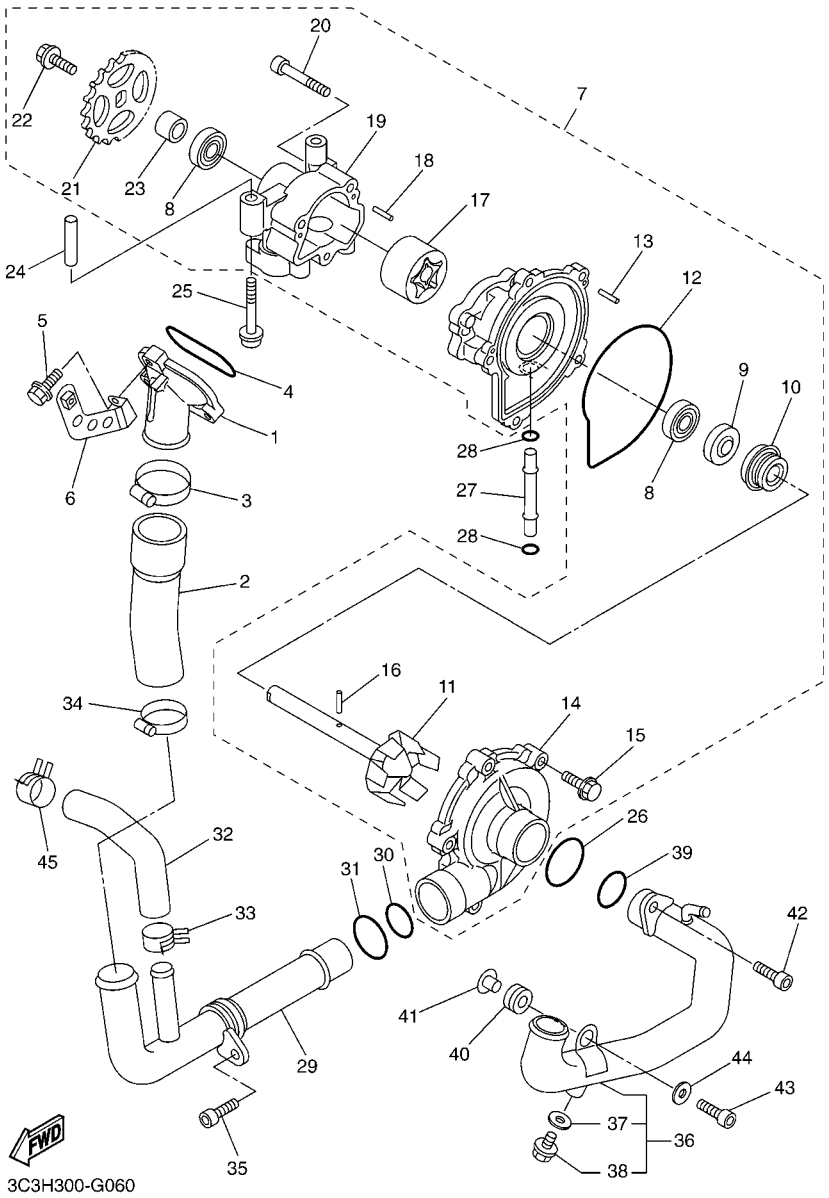

FIG. 6 BOMBA DE AGUA

REF. Nº	CODIGO Nº	DESCRIPCION	2D1R					OBSERVACIONES
28	93210–06667	ANILLO O	2					
29	5VY–12481–11	TUBO 1	1					
30	93210–235A1	ANILLO O	1					
31	93210–27370	ANILLO O	1					
32	5VY–12588–00	MANGUERA 5	1					
33	90467–200A0	PRESILLA	1					
34	90450–32001	BRIDA, MANGUERA	1					
35	90110–06161	TORNILLO ALLEN	1					
36	2D1–12484–01	TUBO 4	1					
37	90430–06014	.JUNTA	1					
38	90153–06002	.TORNILLO HEXAGONAL	1					
39	93210–235A1	ANILLO O	1					
40	90480–12010	TAPON	1					
41	90387–06112	ESPACIADOR	1					
42	90110–06161	TORNILLO ALLEN	1					
43	90110–06174	TORNILLO ALLEN	1					
44	90201–06079	ARANDELA PLANA	1					
45	90467–200A0	PRESILLA	1					

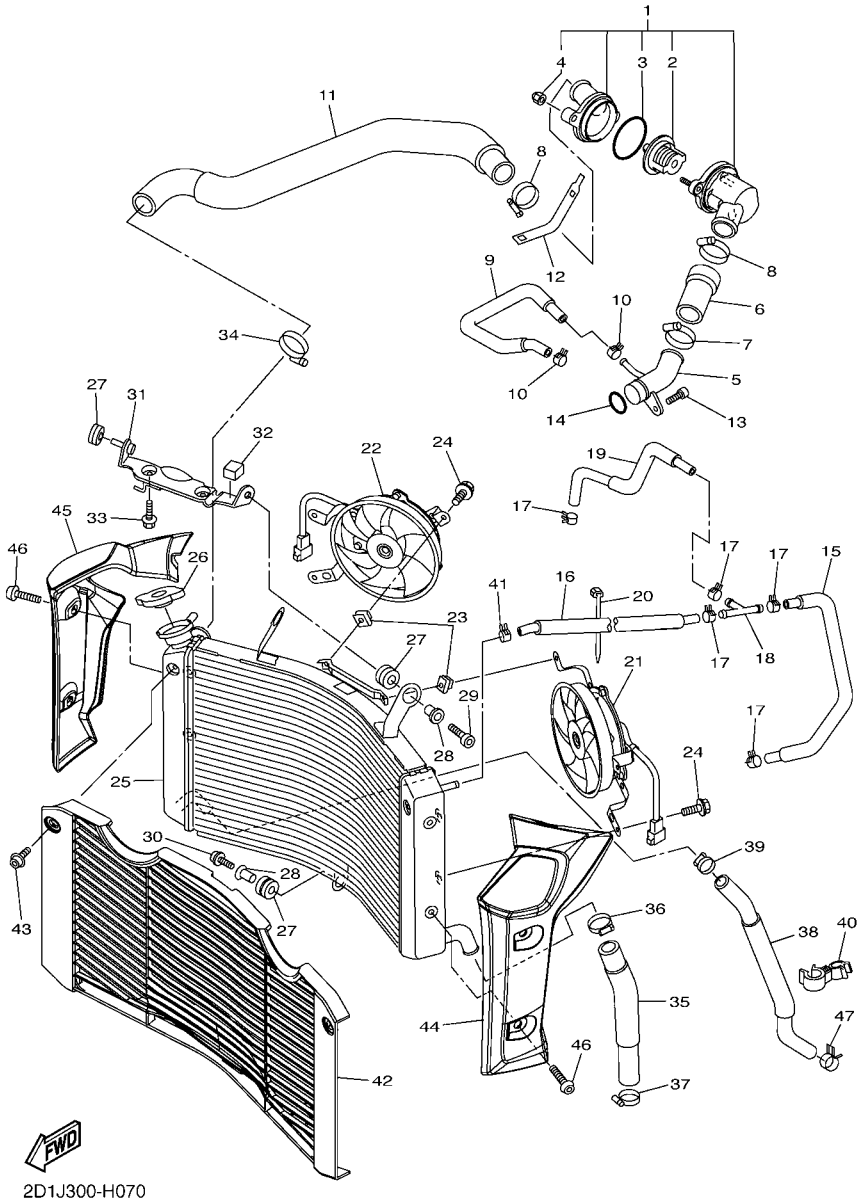

FIG. 7 RADIADOR & MANGUERA

REF. Nº	CODIGO Nº	DESCRIPCION	2D1R					OBSERVACIONES
1	2D1–12410–00	TERMOSTATO CONJUNTO	1					
2	5LP–12411–00	.TERMOSTAT	1					
3	93210–49046	.ANILLO O	1					
4	90176–06014	.TUERCA CORONA	2					
5	5VY–12485–10	TUBO 5	1					
6	5VY–12579–00	MANGUERA 4	1					
7	90450–35001	BRIDA, MANGUERA	1					
8	90450–38040	BRIDA, MANGUERA	2					
9	5VY–1243F–01	MANGUERA 3	1					
10	90467–11090	PRESILLA	2					
11	2D1–12578–00	MANGUERA 3	1					
12	5GV–1246A–00	CUBIERTA 1	1					
13	90110–06168	TORNILLO ALLEN	1					
14	93210–235A1	ANILLO O	1					
15	5VY–1243A–00	TUBO 1	1					
16	2D1–1244G–00	MANGUERA 4	1					
17	90467–11090	PRESILLA	5					
18	90413–07023	UNION	1					
19	2D1–1243E–01	TUBO 2	1					
20	90464–13073	BRIDA	1					
21	2D1–12405–00	COMPRESOR	1					
22	2D1–12405–10	COMPRESOR	1					
23	1AA–12535–00	EMPAQUETADURA	2					
24	2D1–12675–00	PERNO, SUJECION VENTILADOR	6					
25	2D1–12461–00	RADIADOR COMPLETO	1					
26	22W–12462–00	TAPON, DEL RADIADOR	1					
27	90480–15363	TAPON	3					

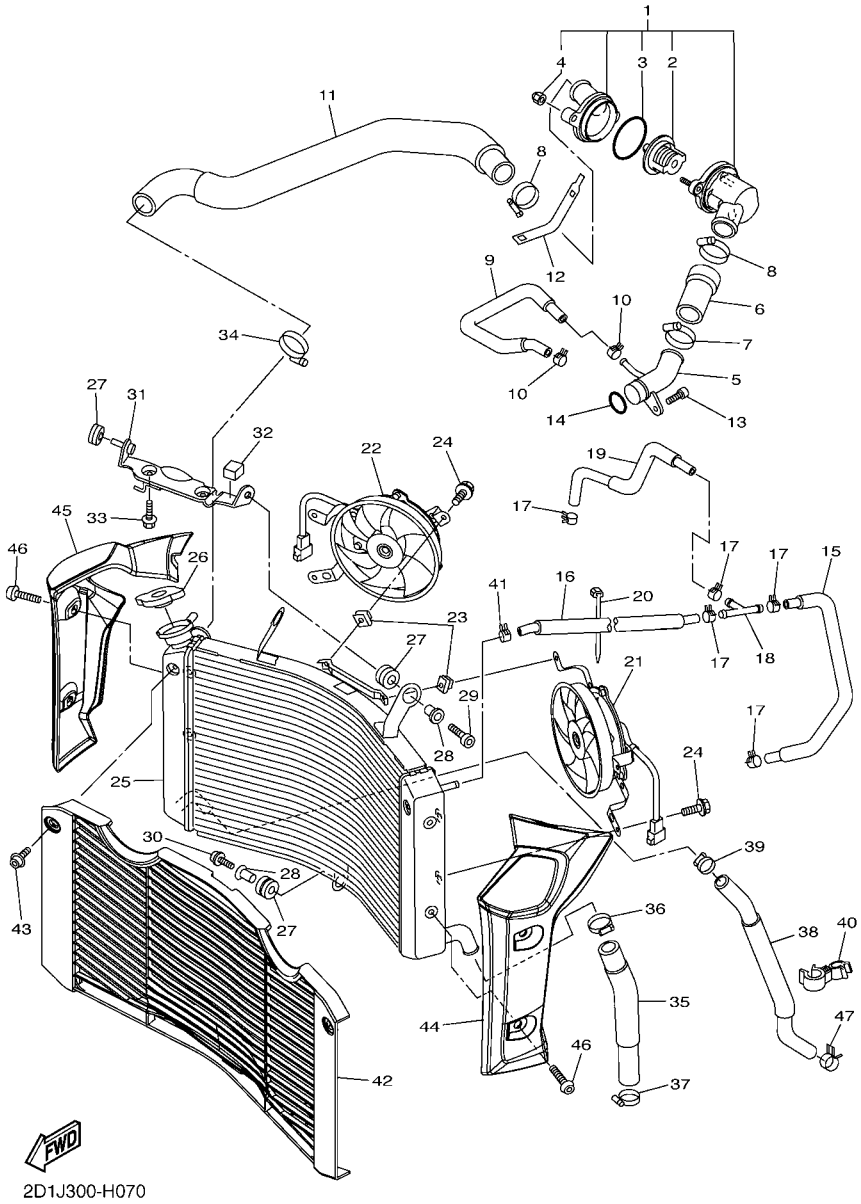

FIG. 7 RADIADOR & MANGUERA

REF. Nº	CODIGO Nº	DESCRIPCION	2D1R					OBSERVACIONES
28	90387–07391	ESPACIADOR	2					
29	90109–06015	PERNO	1					
30	90110–06232	TORNILLO ALLEN	1					
31	2D1–12464–00	APOYO DE RADIADOR	1					
32	2D1–2139U–00	AMORTIGUADOR 2	1					
33	95802–06012	TORNILLO DE REBORDE	2					
34	90450–35001	BRIDA, MANGUERA	1					
35	2D1–12551–00	55 PLACA	1					
36	90450–35001	BRIDA, MANGUERA	1					
37	90450–32001	BRIDA, MANGUERA	1					
38	2D1–12589–00	MANGUERA 6	1					
39	90450–22017	BRIDA, MANGUERA	1					
40	90464–23002	BRIDA	1					
41	90467–11090	PRESILLA	1					
42	2D1–12467–00	CUBIERTA DEL RADIADOR	1					
43	90111–06031	TORNILLO	2					
44	2D1–1240J–00–P0	CUBIERTA DE RADIADOR COMPLETO	1					MBL2
45	2D1–1240K–00–P0	CUBIERTA DE RADIADOR COMPLETO	1					MBL2
46	90111–06078	TORNILLO	4					
47	90467–200A0	PRESILLA	1					

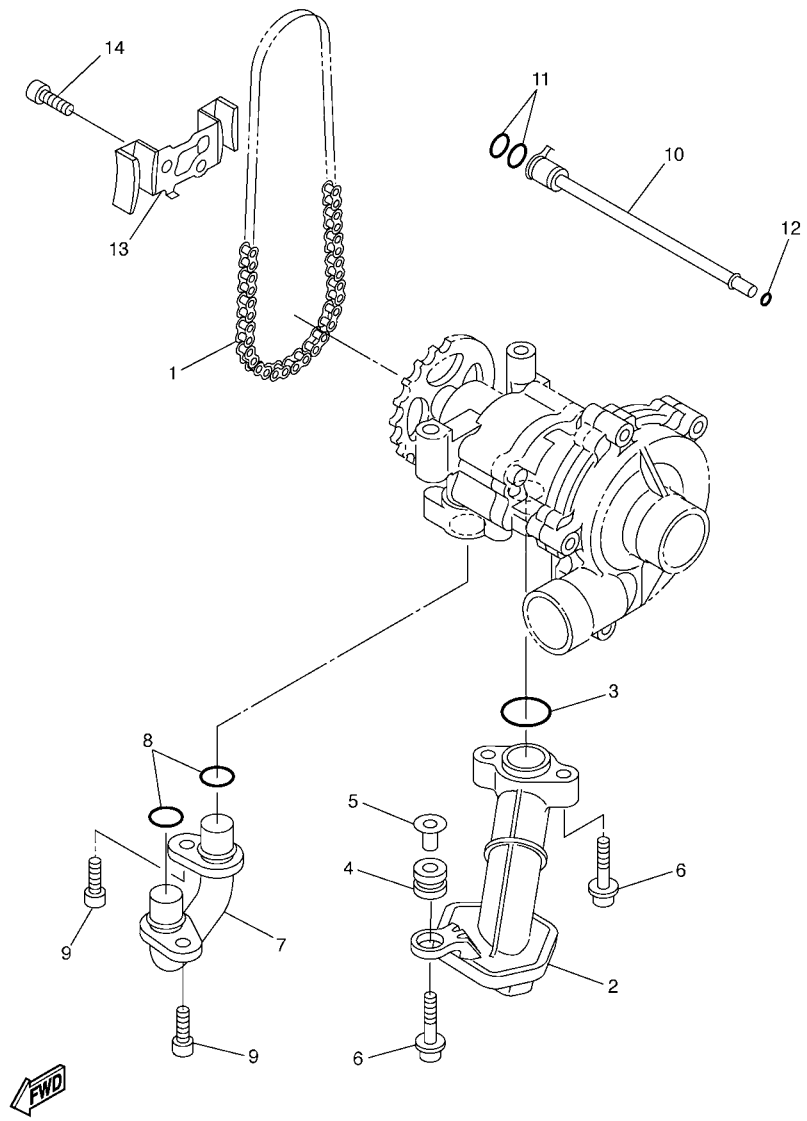

5VY1300-C080

FIG. 8 BOMBA DE ACEITE

REF. Nº	CODIGO Nº	DESCRIPCION	2D1R					OBSERVACIONES
1	94580–25078	CADENA (DID25 78LE)	1					
2	5VY–13410–00	CAJA DE FILTRO COMPLETA	1					
3	93210–22298	ANILLO O	1					
4	90480–13010	TAPON	1					
5	5VY–13117–10	COLLAR, DISTANCIA	1					
6	90110–06173	TORNILLO ALLEN	3					
7	5VY–13416–00	TUBO DE ACEITE 1	1					
8	93210–14003	ANILLO O	2					
9	90110–06161	TORNILLO ALLEN	2					
10	5VY–1316E–00	TUBO, DE ENTREGA 5	1					
11	93210–09165	ANILLO O	2					
12	93210–06667	ANILLO O	1					
13	5VY–13898–00	SOSTEN	1					
14	90110–06182	TORNILLO ALLEN	2					

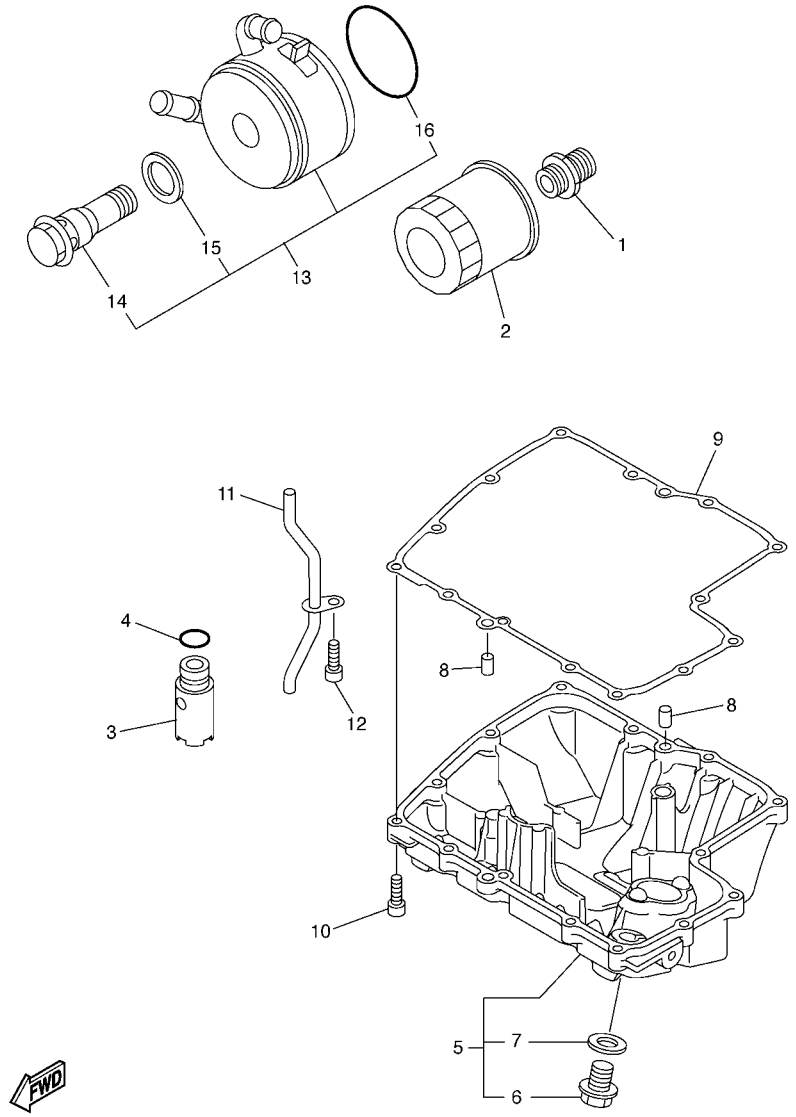

FIG. 9 FILTRO ACEITE

REF. Nº	CODIGO Nº	DESCRIPCION	2D1R					OBSERVACIONES
1	90401–20145	PERNO DE UNION	1					
2	5GH–13440–20	ELEMENTO FILTRO DE ACEITE	1					
3	5VY–13490–00	VALVELA DE DESCOMPRESION	1					
4	93210–15566	ANILLO O	1					
5	2D1–13400–00	CUBIERTA DE FILTRO COMPLETO	1					
6	90340–14132	.TORNILLO, DE DRENAJE	1					
7	214–11198–01	.EMPAQUE	1					
8	99530–08012	PASADOR, DE ESPIGA	2					
9	4C8–13414–00	EMPAQUE DE TAPA FILTRO	1					
10	91312–06025	TORNILLO	14					
11	5VY–13161–00	TUBO CONDUCTOR 1	1					
12	90110–06182	TORNILLO ALLEN	1					
13	5VY–13470–00	ENFRIADOR DE ACEITE COMPLETO	1					
14	5EB–12822–00	.PERNO DE UNION	1					
15	5EB–13475–00	.EMPAQUE	1					
16	5JW–13473–00	.ANILLO O	1					

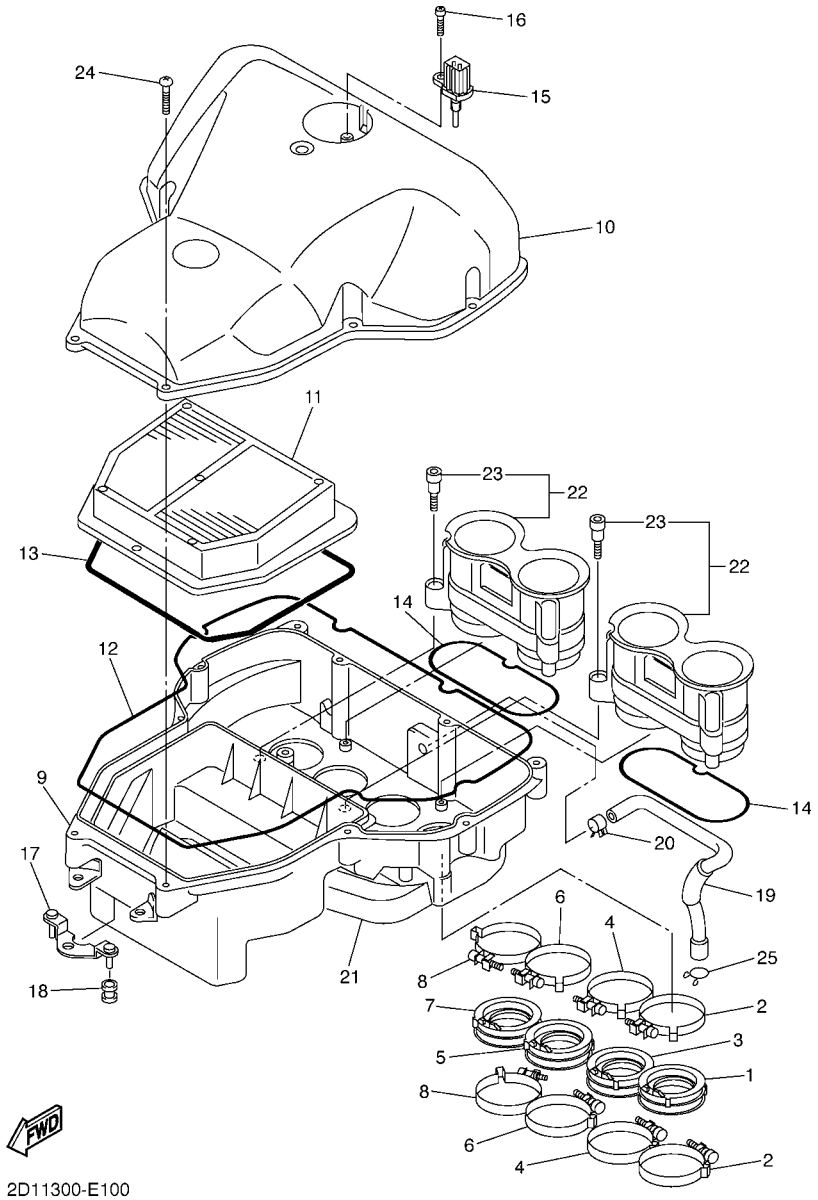

FIG. 10 ADMISION

REF. Nº	CODIGO Nº	DESCRIPCION	2D1R					OBSERVACIONES
1	5VY–13595–00	TOBERA	1					
2	90450–62002	BRIDA, MANGUERA	2					
3	5VY–13596–00	TOBERA DE CARBURADOR 2	1					
4	90450–62002	BRIDA, MANGUERA	2					
5	5VY–13597–00	JUNTA, DE CARBURADOR 3	1					
6	90450–62002	BRIDA, MANGUERA	2					
7	5VY–13598–00	COJINETE DE RODILLOS	1					
8	90450–62002	BRIDA, MANGUERA	2					
9	2D1–14411–00	CAJA FILTRO DEL AIRE 1	1					
10	2D1–14421–00	CAJA FILTRO DEL AIRE 2	1					
11	2D1–14451–00	ELEMENTO DEL FILTRO DEL AIRE	1					
12	2D1–14452–00	SELLO	1					
13	2D1–14462–00	SELLO	1					
14	5VY–14457–00	SELLO	2					
15	8FP–85886–00	SENSOR	1					
16	97702–50520	TORNILLO ROSCA HEMBRA	1					
17	2D1–14498–00	SOPORTE 1	1					
18	90480–08264	TAPON	2					
19	2D1–15393–00	TUBO, RESPIRADERO2	1					
20	90467–14171	PRESILLA	1					
21	2D1–14409–00	AMORTIGUADOR	1					
22	2D1–1440B–00	UNION COMPLETO	2					
23	90109–05005	.PERNO	3					
24	97702–50025	TORNILLO ROSCA HEMBRA	11					
25	90467–14015	PRESILLA	1					

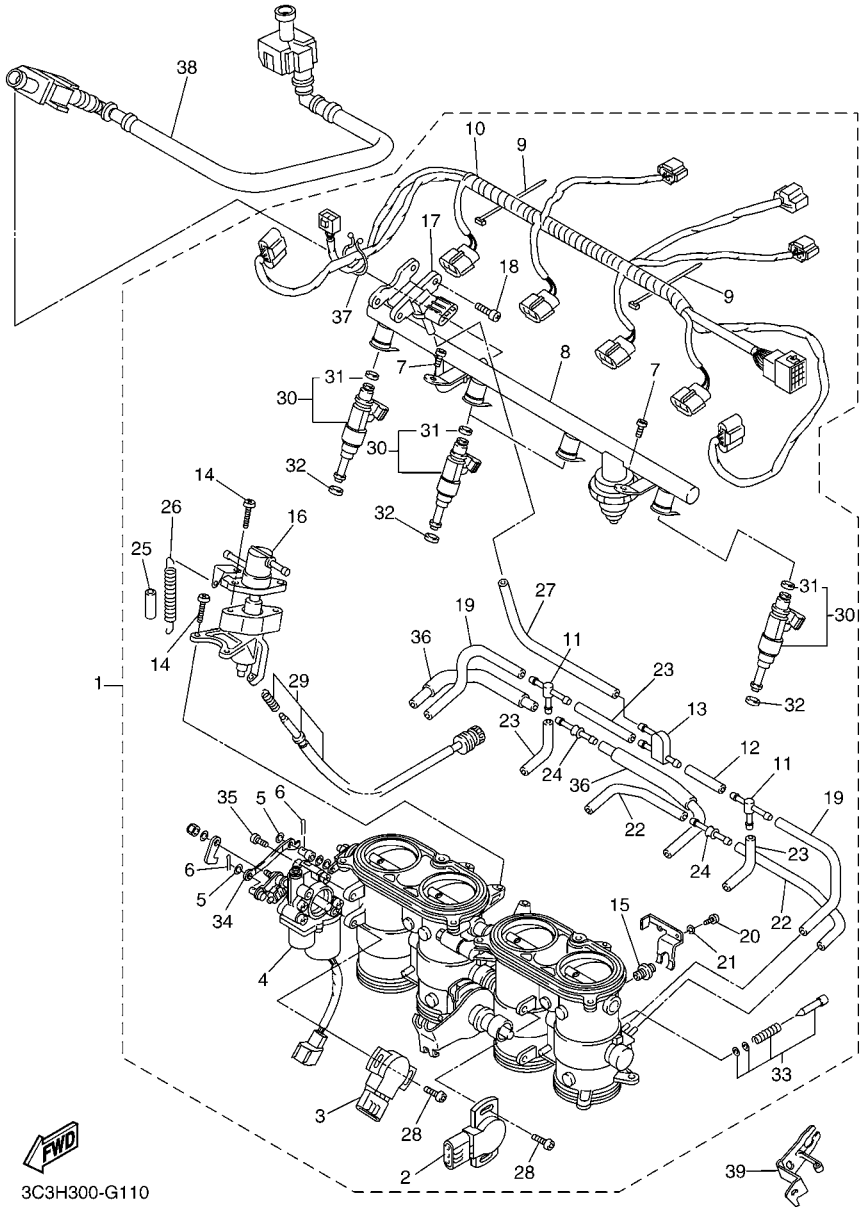

FIG. 11 ADMISION 2

REF. Nº	CODIGO Nº	DESCRIPCION	2D1R					OBSERVACIONES
1	2D1–13750–20	CAJA DE ACELERADOR COMPL.	1					
2	2D1–85885–00	.TERMICA SENSORIO	1					
3	5FL–85885–02	.TERMICA SENSORIO	1					
4	5VY–85850–10	.MOTOR ENGRANADO	1					
5	22U–14952–00	.ARANDELA	2					
6	91492–12010	.PASADOR DE CHAVETA	2					
7	98502–06012	.TORNILLO	2					
8	2D1–13160–00	.TUBO DE LLEGADA CONJUNTO 1	1					
9	4KM–14137–00	.PRESILLA	5					
10	2D1–82386–00	.EXTENSION, ARNES DE CABLES	1					
11	68V–24376–00	.TUBO DE UNION 1	2					
12	5JW–14396–00	.TUBO	1					
13	3XV–14251–00	.NIPLE	1					
14	98502–05014	.TORNILLO	4					
15	5VY–14171–00	.EMBOLO DE ARRANQUE	2					
16	5VY–14204–00	.CAJA, DE ARRANQUE	1					
17	1C7–82380–00	.SENSOR DE PRESION	1					
18	92502–06010	.TORNILLO CABEZA CRUZADA	2					
19	5FL–14349–10	.TUBO	2					
20	98507–03016	.TORNILLO DE CABEZA PLANA	4					
21	92990–03100	.ARANDELA PLANA	4					
22	5PW–14349–00	.TUBO	2					
23	5PS–14987–00	.TUBO	3					
24	5PW–14251–00	.NIPLE	2					
25	5DM–14936–00	.ASIENTO DE RESORTE	1					
26	5JW–14589–00	.RESORTE	1					
27	5SL–14349–00	.TUBO	1					

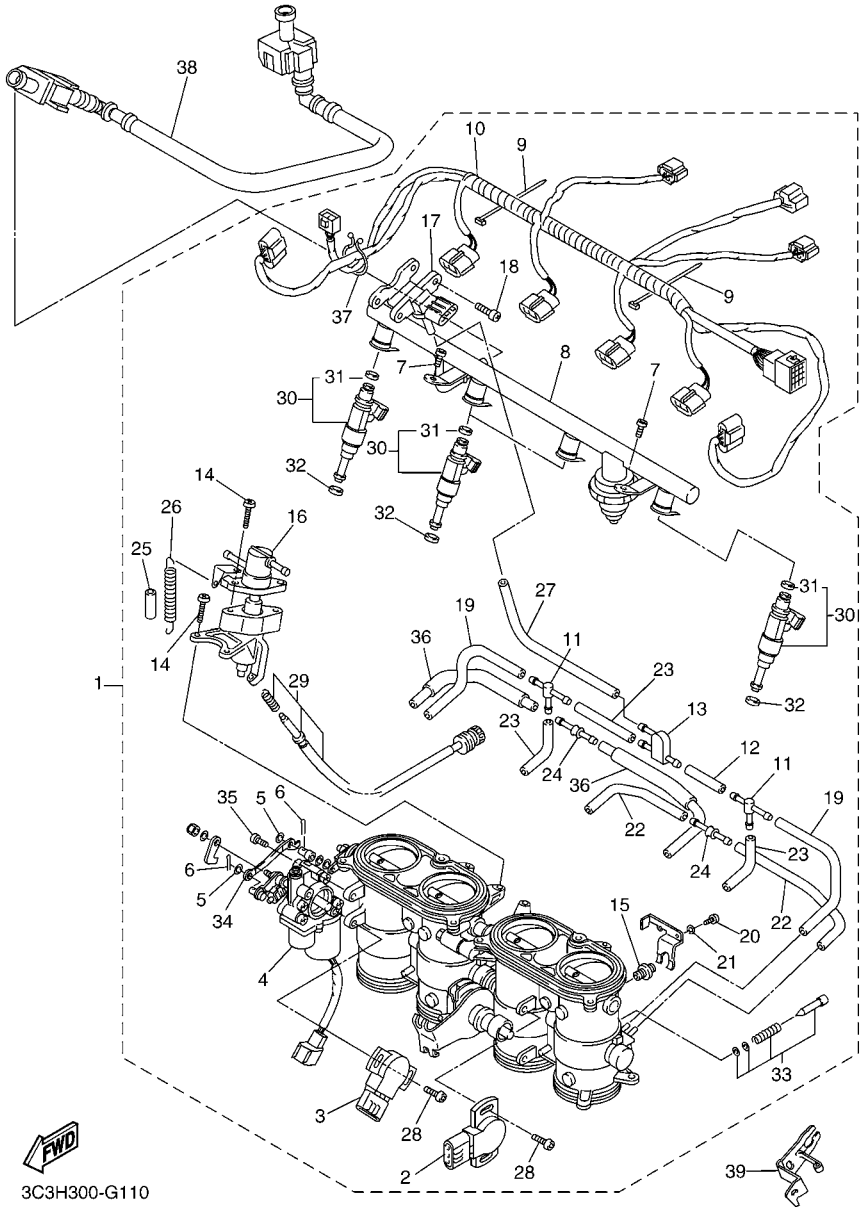

FIG. 11 ADMISION 2

REF. Nº	CODIGO Nº	DESCRIPCION	2D1R					OBSERVACIONES
28	8CC–14216–10	.TORNILLO	4					
29	5PW–14103–00	.CJTO. TORNILLO DEL RALENTI	1					
30	5VY–13761–00	.INYECTOR	4					
31	5PS–14147–00	..ANILLO O	1					
32	8FP–13556–00	.EMPAQUE	4					
33	5JW–14104–00	.CJTO. TORNNILLO DE AIRE	2					
34	5VY–14905–00	.PALANCA DE ARRANQUE	1					
35	98507–06020	.TORNILLO DE CABEZA CON PLANA	2					
36	5VY–13543–00	.TUBO DE AIRE	2					
37	90464–30040	.BRIDA	1					
38	2D1–13971–00	ANILLO DE ESPACIADOR	1					
39	2D1–14413–01	SOPORTE	1					

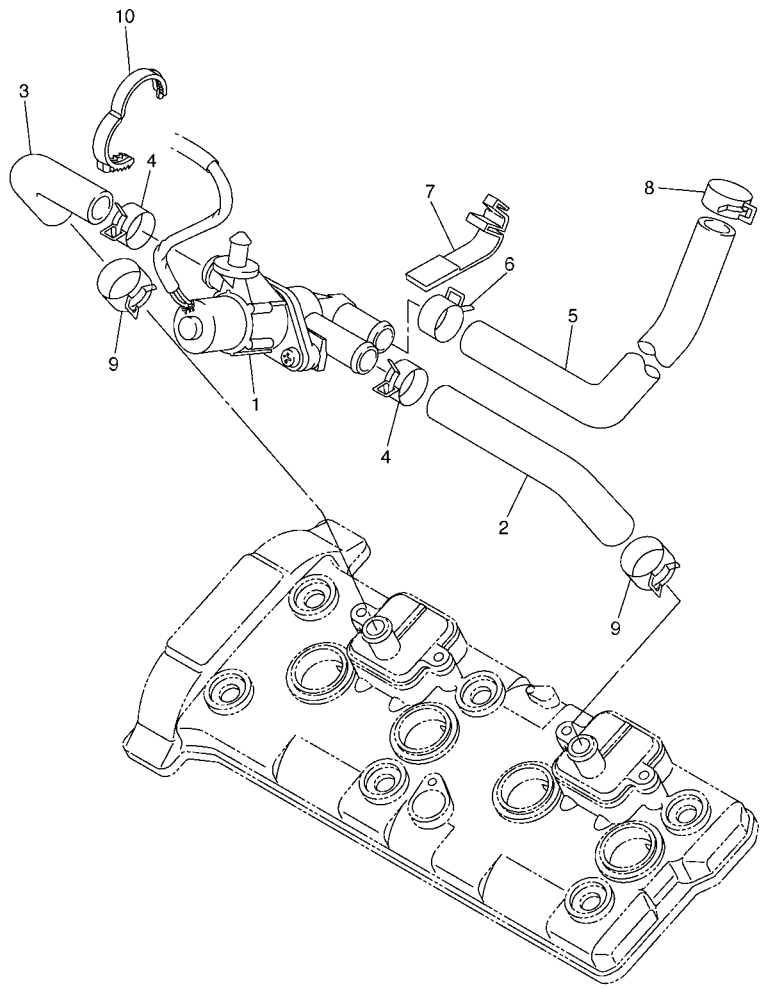

2D11300-E120

FIG. 12 SYSTEMA DE INDUCCION DE AIRE

REF. Nº	CODIGO Nº	DESCRIPCION	2D1R					OBSERVACIONES
1	2D1–14840–00	VALVULA, CORTE DE AIRE	1					
2	5VY–14881–00	TUBO 1	1					
3	5VY–14882–00	TUBO 2	1					
4	90467–18172	PRESILLA	2					
5	5VY–14883–00	TUBO 3	1					
6	90467–18172	PRESILLA	1					
7	5JW–14723–00	CUBIERTA	2					
8	90467–17128	PRESILLA	1					
9	90467–180A0	PRESILLA	2					
10	90464–28003	BRIDA	1					

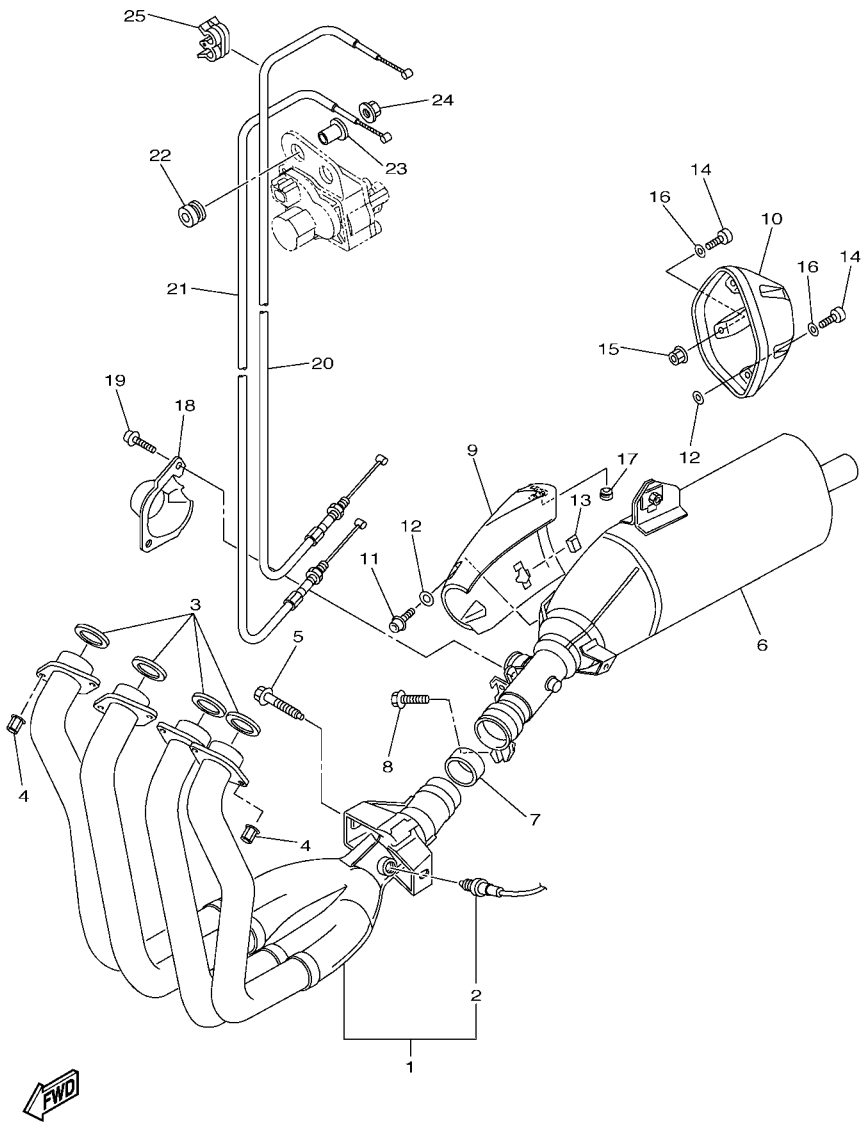

1CA5300-J130

FIG. 13 DESCARGA

REF. Nº	CODIGO Nº	DESCRIPCION	2D1R					OBSERVACIONES
1	2D1–14602–10	TUBO DE ESPAPE COMPLETO	1					
2	2D1–8592A–00	.SENSOR	1					
3	4FM–14613–00	JUNTA, TUBO DE ESCAPE	4					
4	90179–08410	TUERCA	8					
5	90109–08170	PERNO	2					
6	2D1–14703–10	SILENCIADOR COMPL. 1	1					
7	5VY–14755–00	EMPAQUE DE SILENCIADOR	1					
8	95814–08030	TORNILLO	1					
9	2D1–14718–20	PROTECTOR DE SILENCIADOR 1	1					
10	2D1–14799–10	TAPA	1					
11	90111–06060	TORNILLO	2					
12	90201–05017	ARANDELA PLANA	6					
13	3MA–24181–00	AMORTIGUADOR DE MONTAJE 1	2					
14	91380–06014	PERNO	5					
15	95702–06500	TUERCA DE BRIDA	1					
16	92990–06600	ARANDELA PLANA	5					
17	2D1–14737–00	AMORTIGUADOR DE SILENCIADOR	1					
18	2D1–14826–00	PROTECTOR DE VALVULA DE ESCAPE	1					
19	90110–06110	TORNILLO ALLEN	2					
20	2D1–1133E–01	CABLE DE POLEA	1					
21	2D1–1133F–11	CABLE DE POLEA	1					
22	90480–14604	TAPON	2					
23	90387–06M60	ESPACIADOR	1					
24	95702–06500	TUERCA DE BRIDA	1					
25	90464–04001	BRIDA	1					

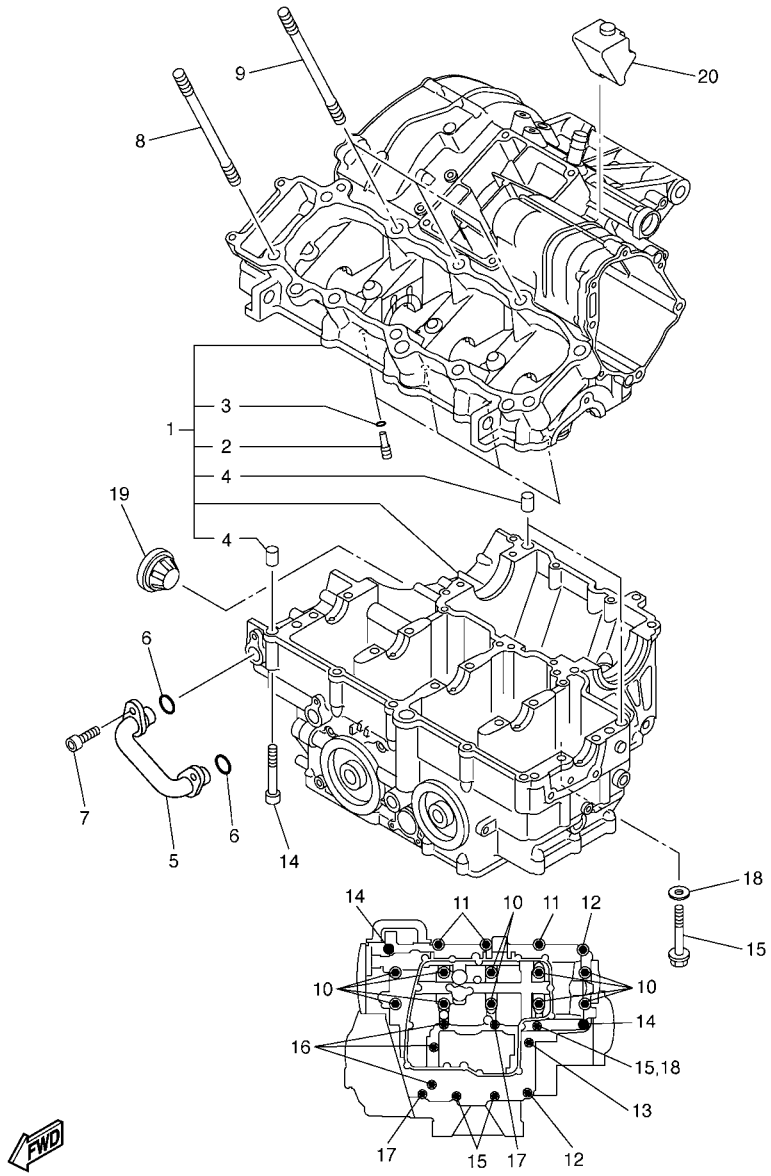

5VY1300-C140

FIG. 14 CARTER

REF. Nº	CODIGO Nº	DESCRIPCION	2D1R					OBSERVACIONES
1	4C8–15100–00	CARTER COMPLETO	1					
2	5EB–15155–00	.BOQUILLA 3	4					
3	93210–04092	.ANILLO O	4					
4	99530–10014	.PASADOR, DE ESPIGA	3					
5	5VY–13418–11	TUBO DE ACEITE 2	1					
6	93210–14003	ANILLO O	2					
7	90110–06161	TORNILLO ALLEN	2					
8	90116–10032	ESPARRAGO	7					
9	90116–10023	ESPARRAGO	3					
10	90119–09012	TORNILLO CON ARANDELA	10					
11	95812–08050	TORNILLO DE REBORDE	3					
12	95812–08060	TORNILLO DE REBORDE	2					
13	90105–08101	TORNILLO	1					
14	90109–06100	PERNO	2					
15	95812–06060	TORNILLO DE REBORDE	3					
16	95812–06070	TORNILLO DE REBORDE	3					
17	95812–06050	TORNILLO DE REBORDE	2					
18	90430–06166	JUNTA	1					
19	5PW–15361–00	MEDIDOR DE NIVEL	1					
20	5VY–15316–00	AMORTIGUADOR 1	1					

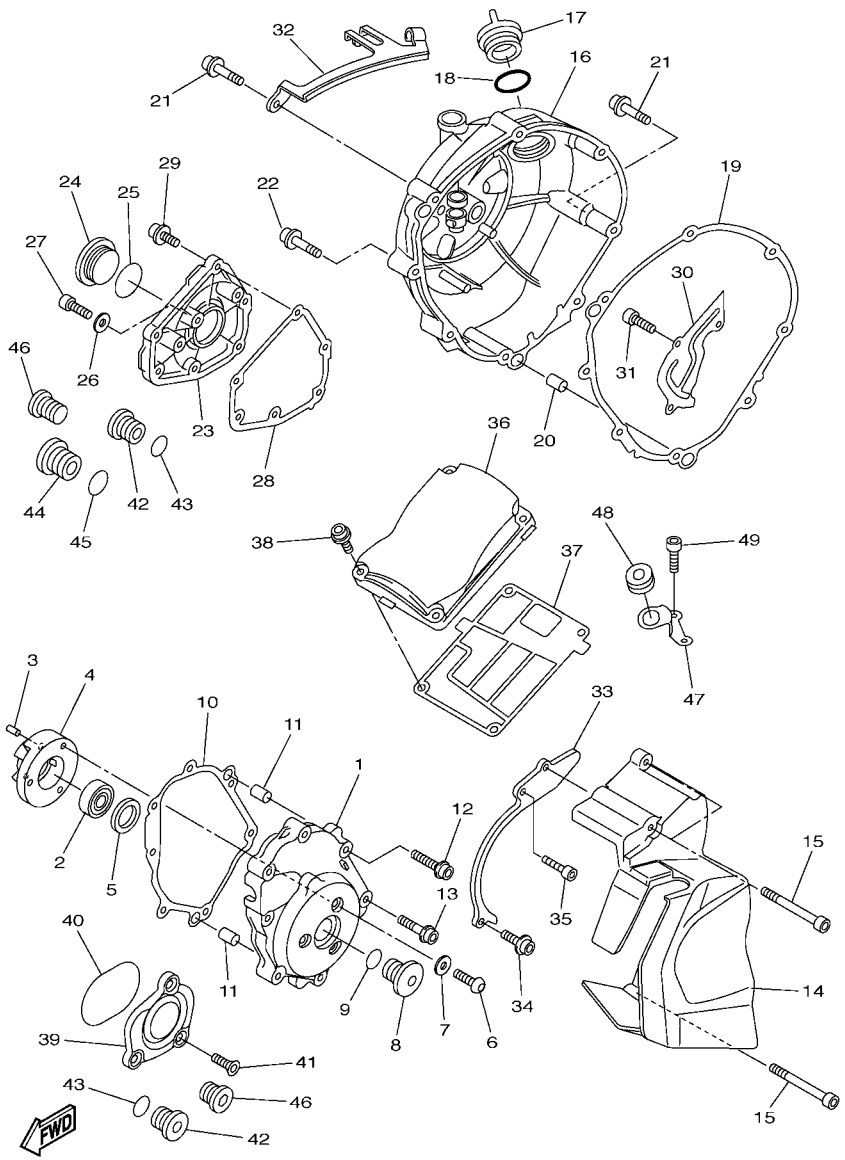

FIG. 15 CUBIERTA DE CARTER 1

REF. Nº	CODIGO Nº	DESCRIPCION	2D1R					OBSERVACIONES
1	5VY–15411–00	CUBIERTA DE CARTER 1	1					
2	93306–20124	COJINETE	1					
3	93605–10108	PASADOR DE CLAVIJA	2					
4	5VY–15164–00	CAJA DE COJINETE 2	1					
5	5VY–15542–00	COLLAR 2	1					
6	90149–06064	TORNILLO DE REGLAJE	3					
7	90201–06431	ARANDELA PLANA	3					
8	5PX–15189–00	TAPON	1					
9	93210–22382	ANILLO O	1					
10	2D1–15451–10	EMPAQ DE CUBIERTA DE CARTER	1					
11	99480–10018	PASADOR	2					
12	90110–06323	TORNILLO ALLEN	4					
13	90110–08099	TORNILLO ALLEN	3					
14	2D1–15418–00	CUBIERTA CAJA DE CADENA	1					
15	90110–06255	TORNILLO ALLEN	3					
16	2D1–15421–00	TAPA DE CARTER DERECHA	1					
17	3F9–15362–10	TAPON DEL NIVEL DE ACEITE	1					
18	93210–27194	ANILLO O	1					
19	4C8–15461–00	JUNTA TAPA CARTER DERECHO 2	1					
20	93610–20189	PASADOR DE CLAVIJA	2					
21	90110–06321	TORNILLO ALLEN	7					
22	90110–06320	TORNILLO ALLEN	1					
23	2D1–15416–00	CUBIERTA DE BOMBA DE ACEITE	1					
24	90340–32004	TORNILLO, DE DRENAJE	1					
25	93210–32172	ANILLO O	1					
26	90430–08143	JUNTA	1					
27	92014–08012	PERNO	1					

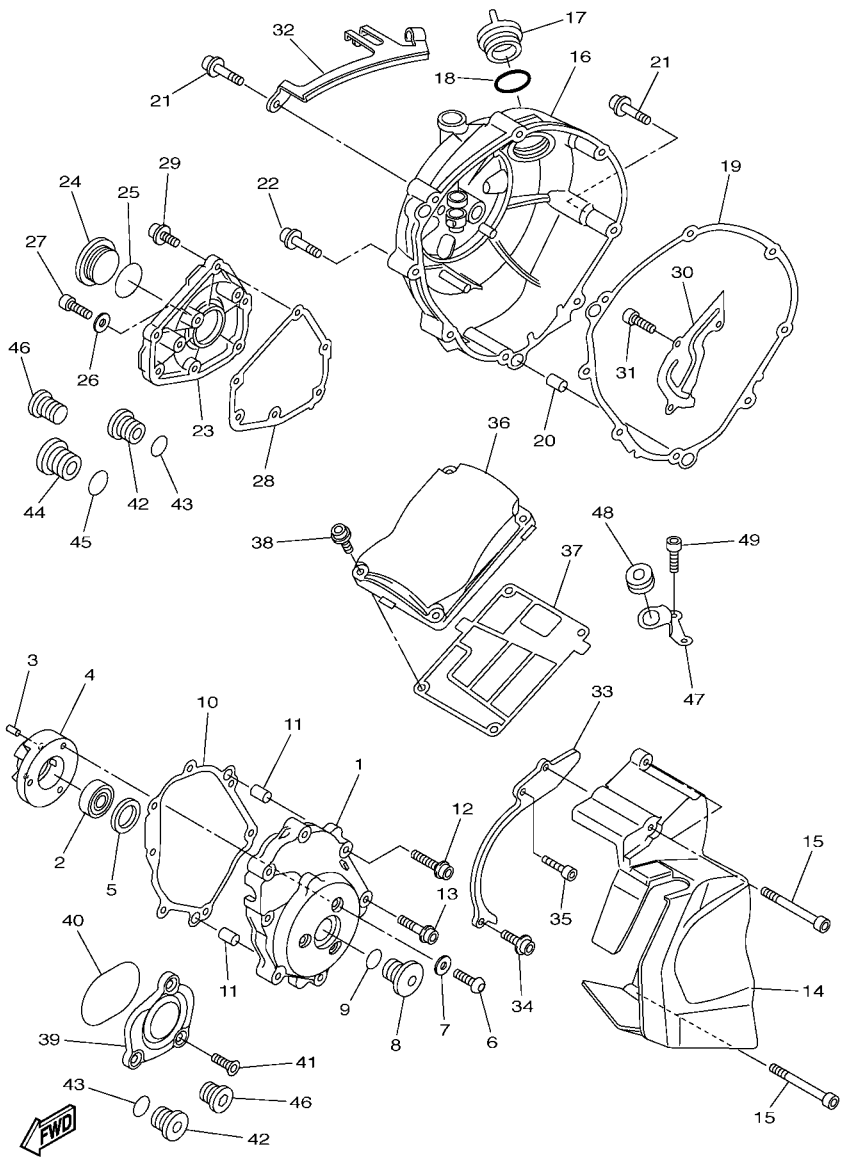

FIG. 15 CUBIERTA DE CARTER 1

REF. Nº	CODIGO Nº	DESCRIPCION	2D1R					OBSERVACIONES
28	4C8–15456–00	EMPAQ CUBTA.BOMBA ACEITE 1	1					
29	90110–06331	TORNILLO ALLEN	6					
30	5VY–11165–00	PLACA RESPIRADERO	1					
31	90110–06182	TORNILLO ALLEN	3					
32	2D1–15441–01	SOSTEN DE CABLE DE EMBRAGUE	1					
33	4B1–15113–00	PLACA	1					
34	90110–06277	TORNILLO ALLEN	1					
35	90110–06276	TORNILLO ALLEN	1					
36	2D1–15413–00	CUBIERTA	1					
37	4C8–15462–00	EMPAQ CUBIERTA DE CARTER 3	1					
38	90110–06172	TORNILLO ALLEN	4					
39	5VY–15431–00	CUBIERTA DE CARTER 3	1					
40	93210–57003	ANILLO O	1					
41	90151–06022	TORNILLO EMBUTIDO	3					
42	36Y–15189–00	TAPON	3					
43	93210–16325	ANILLO O	3					
44	4H7–15189–00	TAPON	1					
45	93210–22382	ANILLO O	1					
46	90340–12003	TORNILLO, DE DRENAJE	2					
47	5VY–12443–10	APOYO	1					
48	90480–13014	TAPON	1					
49	91380–06014	PERNO	2					

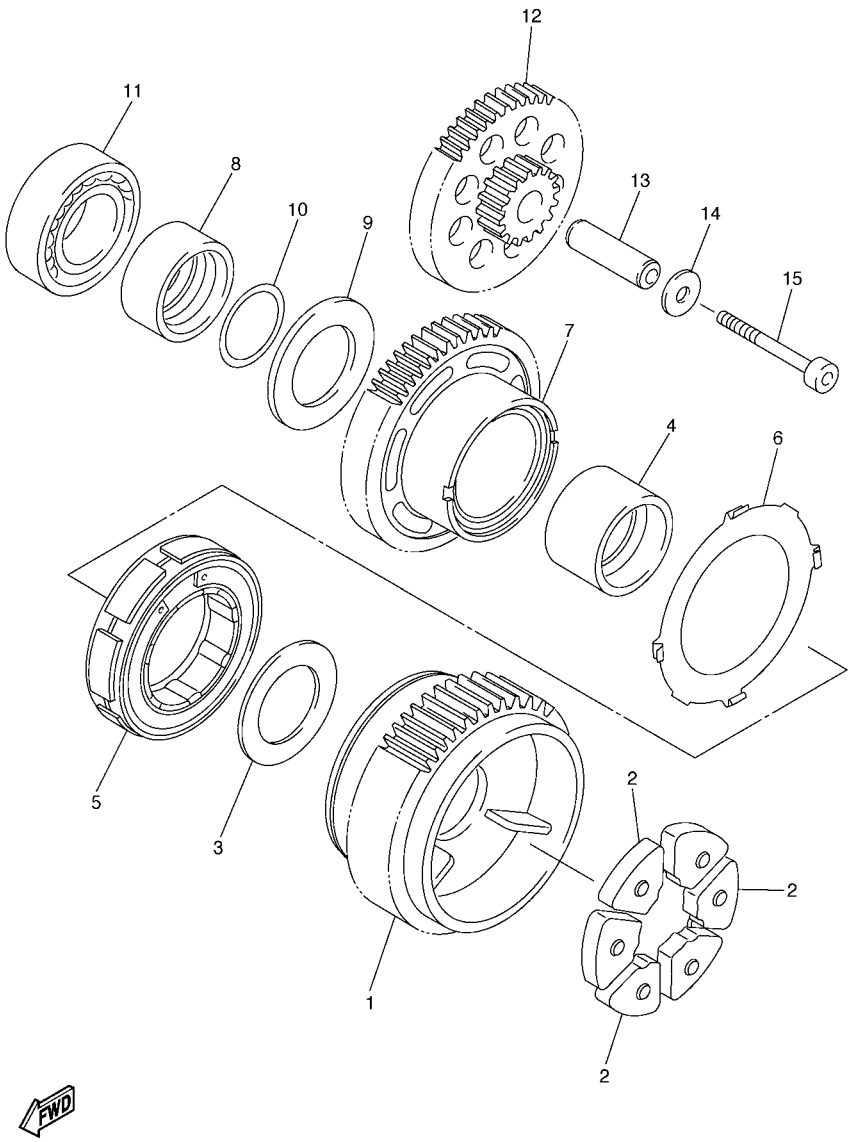

5VY1300-C160

FIG. 16 ARRANQUE

REF. Nº	CODIGO Nº	DESCRIPCION	2D1R					OBSERVACIONES
1	2D1–11537–00	ENGRANAJE TRACCION	1					
2	5VY–16155–00	AMORTIGUADOR 1	3					
3	90201–20016	ARANDELA PLANA	1					
4	5VY–11478–00	COLLAR	1					
5	5VY–15570–00	EMBRAGUE DEL ARRANQUE COMPLETA	1					
6	5VY–15586–00	PLACA	1					
7	5VY–15515–00	ENGRANAJE 3	1					
8	5VY–11445–00	ESPACIADOR	1					
9	90201–20017	ARANDELA PLANA	1					
10	93210–18397	ANILLO O	1					
11	93306–20230	COJINETE	1					
12	5VY–15517–00	ENGRENAJE POSICION 2DA	1					
13	5VY–15521–00	EJE 1	1					
14	90201–06589	ARANDELA PLANA	1					
15	90110–06176	TORNILLO ALLEN	1					

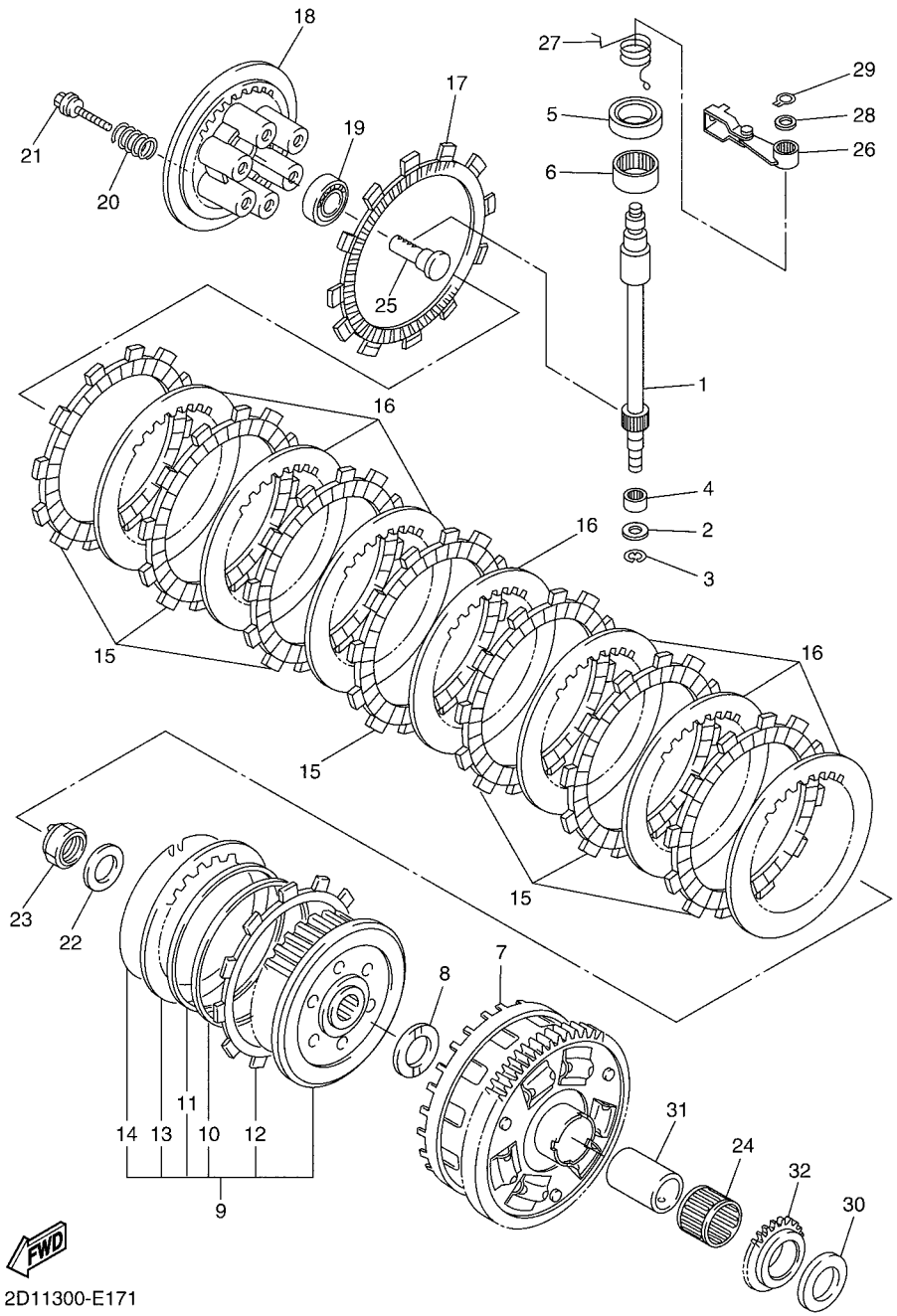

FIG. 17 EMBRAGUE

REF. Nº	CODIGO Nº	DESCRIPCION	2D1R					OBSERVACIONES
1	2D1–16382–00	EJE DE PALANCA DE EMPUJE	1					
2	92907–08600	ARANDELA	1					
3	99001–07600	PRESILLA REDONDA	1					
4	93317–11096	COJINETE	1					
5	93102–15212	SELLO ACEITE	1					
6	93315–31502	COJINETE DE RODILLOS	1					
7	5VY–16150–00	CAMPANA DE EMBRAGUE	1					
8	5VY–16154–00	ARANDELA, DE EMPUJE 1	1					
9	2D1–16370–00	COPA DE EMBRAGUE COMPLETA	1					
10	5VY–16384–00	.PLACA DE ASIENTO	1					
11	5VY–16383–00	.RESORTE DE COPA DE EMBRAGUE	1					
12	5VY–16331–00	.DISCO, DE FRICCION 2	1					
13	5VY–16325–00	.DISCO, DE EMBRAGUE	1					
14	4X7–16385–00	.RESORTE DE COPA DE EMBRAGUE	1					
15	5VY–16321–00	PLACA DE FRICCION	7					
16	5VY–16325–00	DISCO, DE EMBRAGUE	7					
17	5VY–16330–00	PLACA DE FRICCION 2	1					
18	5VY–16351–00	PLATO DE PRESION	1					
19	93306–00304	COJINETE	1					
20	90501–230A0	RESORTE DE COMPRESION	6					
21	90159–06026	TORNILLO CON VALONA	6					
22	90208–20001	ARANDELA DE RESORTE CONICO	1					
23	90179–20007	TUERCA	1					
24	93310–232R9	COJINETE DE RODILLOS	1					
25	4XV–16356–01	VARILLA DE EMPUJE 1	1					
26	5VY–16340–00	PALANCA DE EMPUJE COMPLETA	1					
27	90508–18051	RESORTE DE TORSION	1					

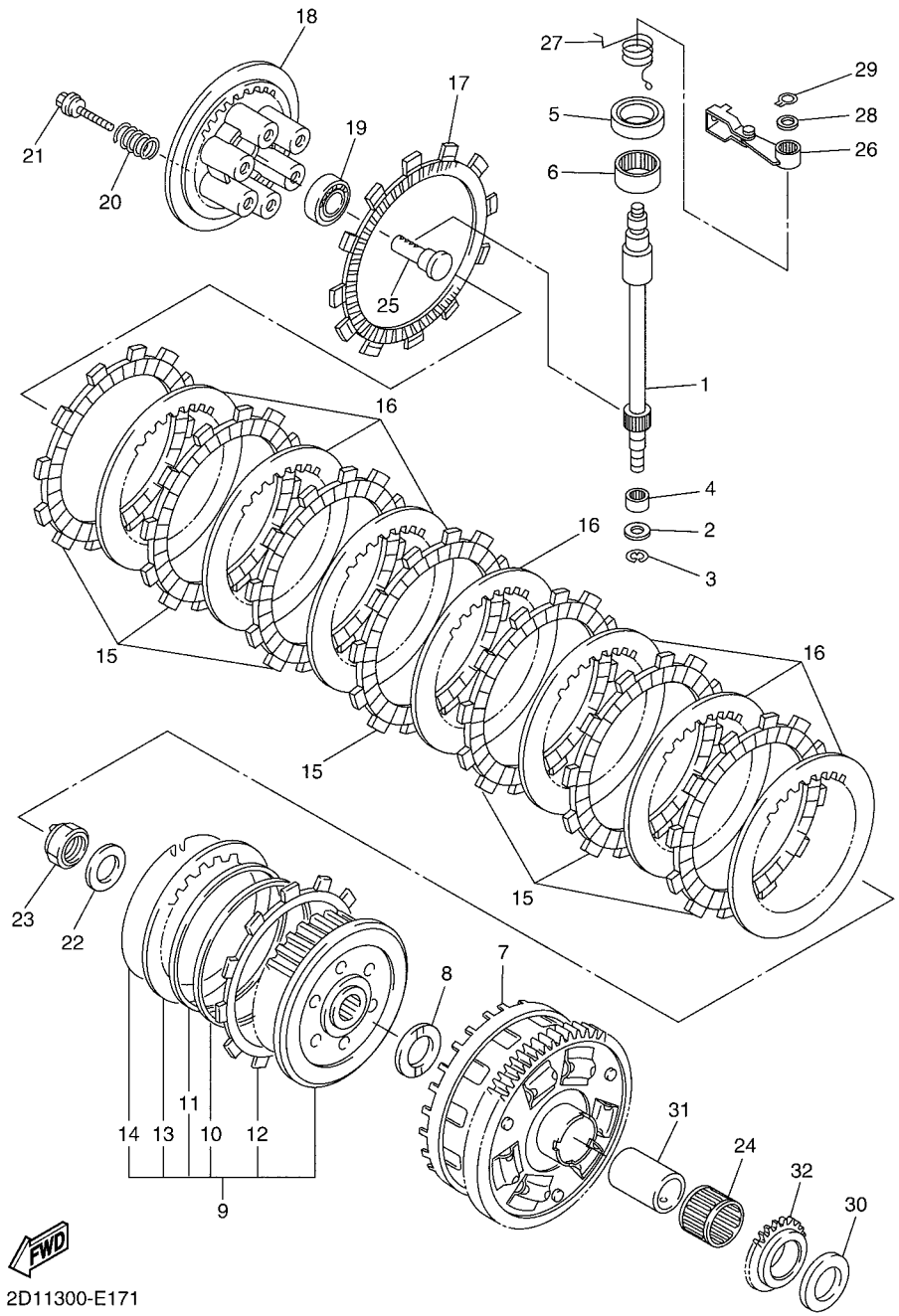

FIG. 17 EMBRAGUE

REF. Nº	CODIGO Nº	DESCRIPCION	2D1R					OBSERVACIONES
28	90201–10029	ARANDELA PLANA	1					
29	99009–10400	PRESILLA REDONDA	1					
30	5VY–16164–00	PLACA DE EMPUJE 2	1					
31	5VY–16181–00	SEPARADOR	1					
32	5VY–13354–00	CATALINA	1					

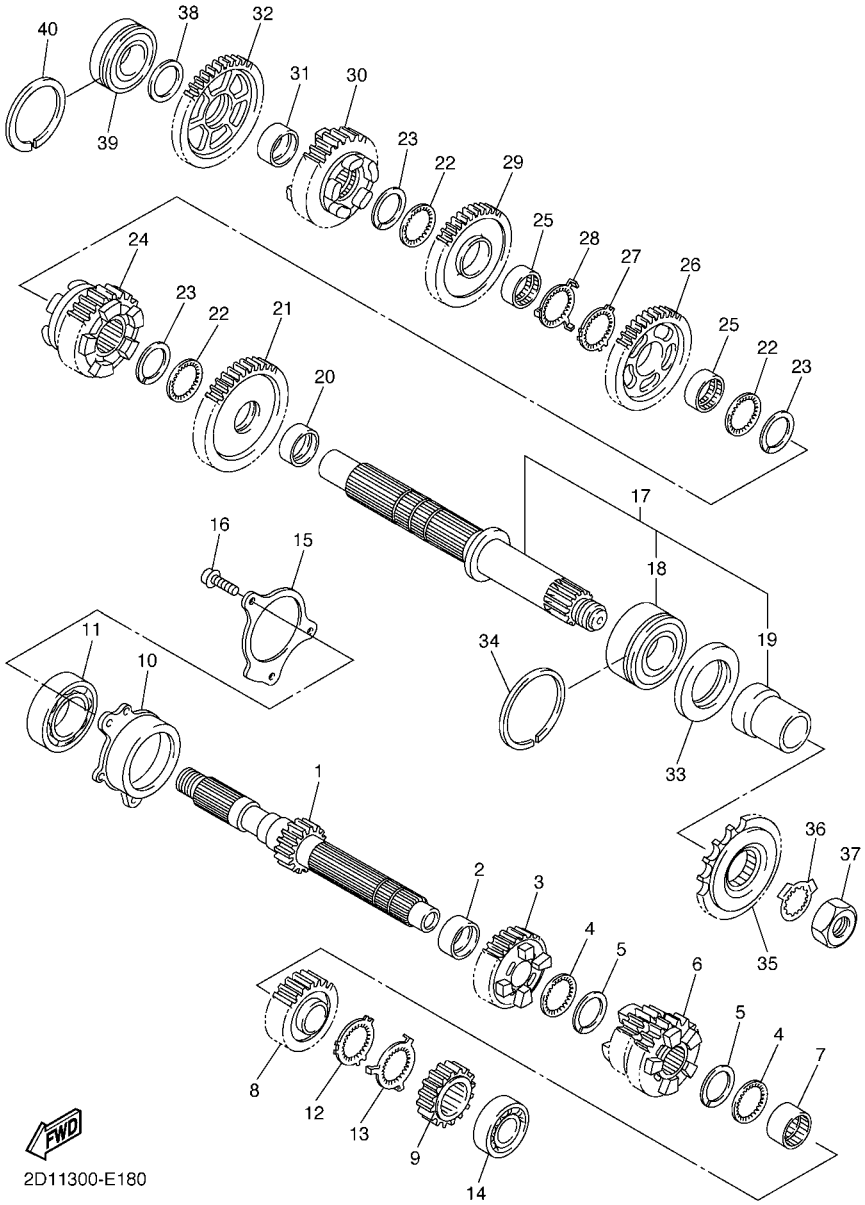

FIG. 18 TRANSMISION

REF. Nº	CODIGO Nº	DESCRIPCION	2D1R					OBSERVACIONES
1	5VY–17411–00	EJE PRIMARIO (15T)	1					
2	90387–28003	ESPACIADOR	1					
3	2D1–17151–00	ENGRANAJE PINON DE 5TA (20T)	1					
4	90209–25011	ARANDELA DE SEPARACION	2					
5	93440–28184	SEGURO	2					
6	2D1–17131–00	ENGRANAJE PINON DE 3RA(21/23T)	1					
7	90387–25007	ESPACIADOR	1					
8	2D1–17161–00	ENGRANAJE PINON 6TA (24T)	1					
9	2D1–17121–10	ENGRANAJE DE PINON DE 2DA(16T)	1					
10	5VY–15163–00	CAJA DE COJINETE 1	1					
11	93306–20652	COJINETE	1					
12	90214–25004	ARANDELA DE POSICION	1					
13	90214–25003	ARANDELA DE POSICION	1					
14	93306–27208	COJINETE	1					
15	5VY–17446–00	PLACA	1					
16	90110–06164	TORNILLO ALLEN	3					
17	5VY–17402–00	EJE DE TRACCION COMPLETO	1					
18	93305–20605	.COJINETE	1					
19	5VY–17442–00	.COLLAR DISTANCIADOR	1					
20	90387–31003	ESPACIADOR	1					
21	2D1–17221–00	ENGRANAJE RUEDA DE 2DA (33T)	1					
22	90209–28008	ARANDELA DE SEPARACION	3					
23	93440–31187	SEGURO	3					
24	2D1–17261–00	ENGRANAJE DE RUEDA 6TA (29T)	1					
25	90387–28004	ESPACIADOR	2					
26	5VY–17241–00	ENGRANAJE DE RUEDA 4TA (35T)	1					
27	90214–29002	ARANDELA DE POSICION	1					

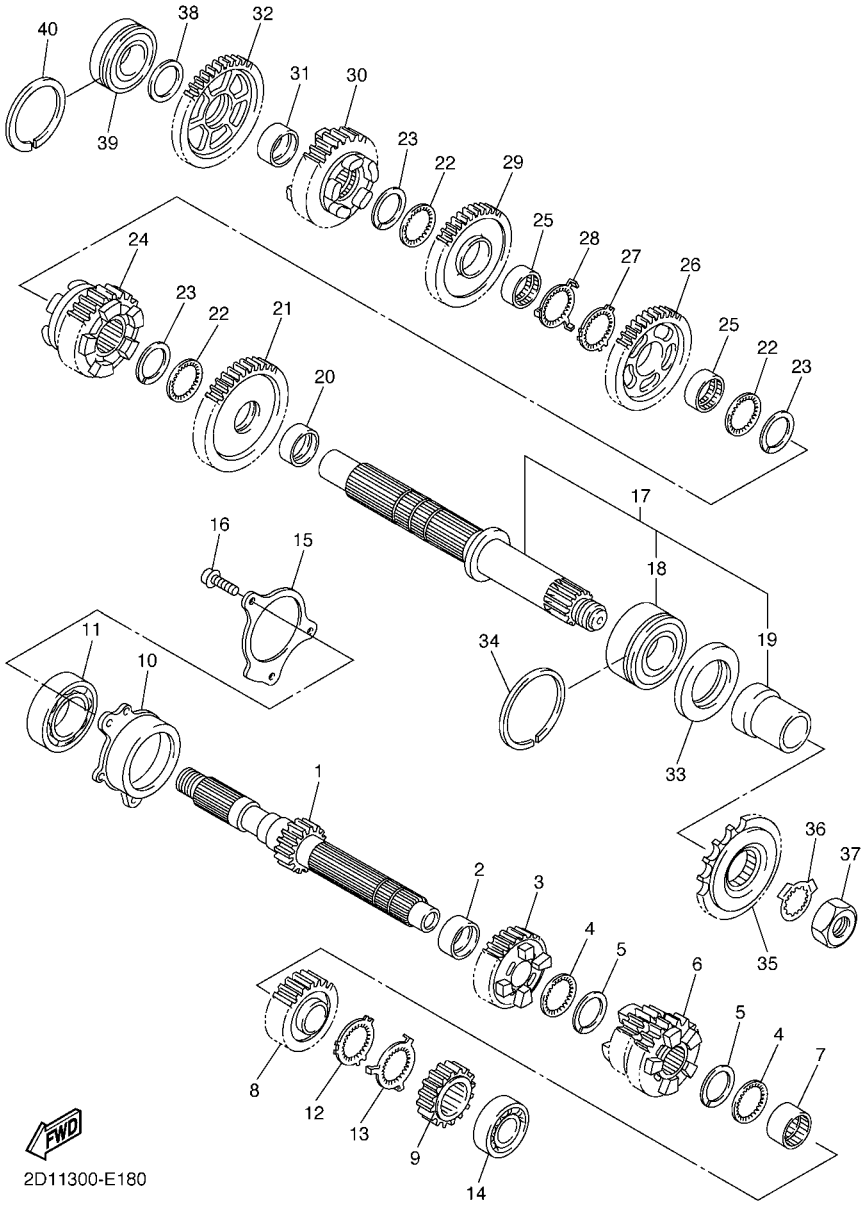

FIG. 18 TRANSMISION

REF. Nº	CODIGO Nº	DESCRIPCION	2D1R					OBSERVACIONES
28	90214–28002	ARANDELA DE POSICION	1					
29	5VY–17231–00	ENGRANAJE RUEDA DE 3RA (37T)	1					
30	2D1–17251–01	ENGRANAJE DE RUEDA 5TA (27T)	1					
31	90387–25008	ESPACIADOR	1					
32	5VY–17211–00	ENGRANAJE RUEDA DE 1RA (38T)	1					
33	93102–40330	SELLO ACEITE	1					
34	93440–62032	SEGURO	1					
35	3CV–17460–00	RUEDA DENTADA (17T)	1					
36	90215–30233	ARANDELA DE CIERRE	1					
37	90179–22011	TUERCA	1					
38	90201–257H0	ARANDELA PLANA	1					
39	93306–205A2	COJINETE	1					
40	93440–52009	SEGURO	1					

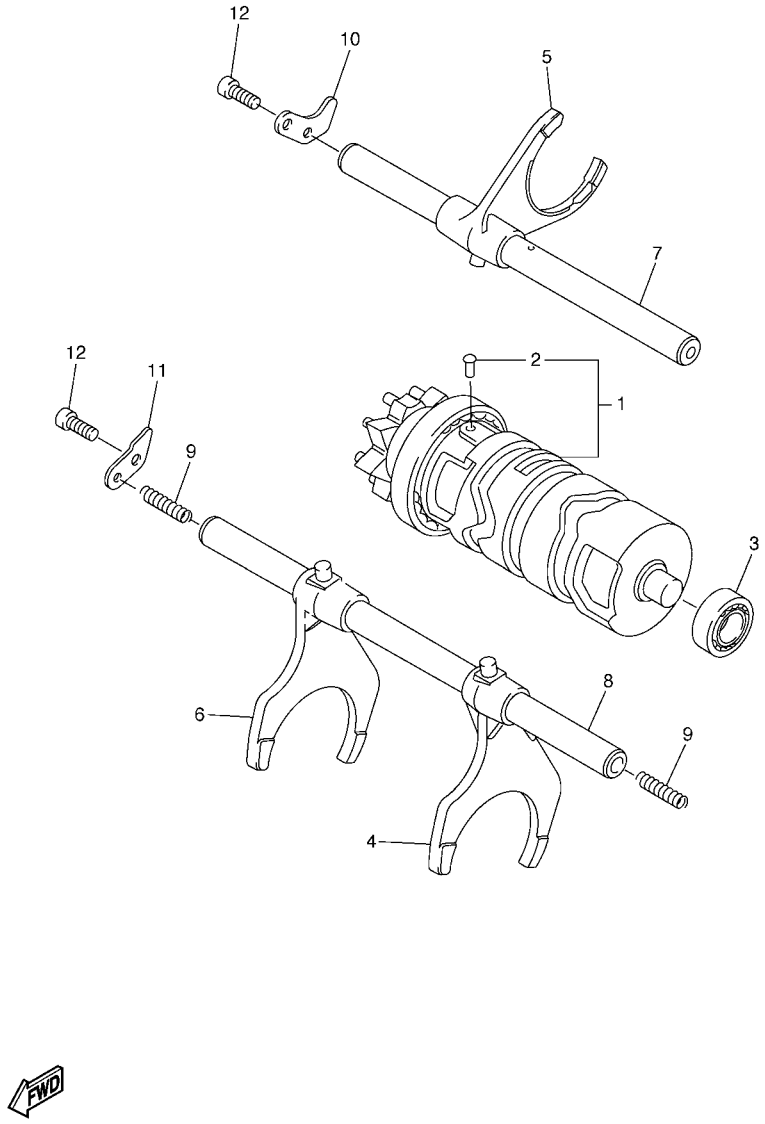

FIG. 19 LEVA DE CAMBIO & HORQUILLA

REF. Nº	CODIGO Nº	DESCRIPCION	2D1R					OBSERVACIONES
1	5VY–18540–00	LEVA DEL CAMBIO COMPLETA	1					
2	136–18542–00	.PUNTO MUERTO	1					
3	93306–00106	COJINETE	1					
4	2D1–18511–00	HORQUILLA DEL CAMBIO 1	1					
5	2D1–18512–00	HORQUILLA DEL CAMBIO 2	1					
6	5VY–18513–01	HORQUILLA DEL CAMBIO 3	1					
7	5VY–18531–00	BARRA GUIA HORQ. CAMBIO 1	1					
8	5VY–18535–00	BARRA GUIA HORQ .CAMBIO 2	1					
9	90501–064L1	RESORTE DE COMPRESION	2					
10	5VY–18536–00	TOPE DE PALANCA SELECTOR	1					
11	5VY–18562–00	PLACA DE TOPE 2	1					
12	90110–06182	TORNILLO ALLEN	2					

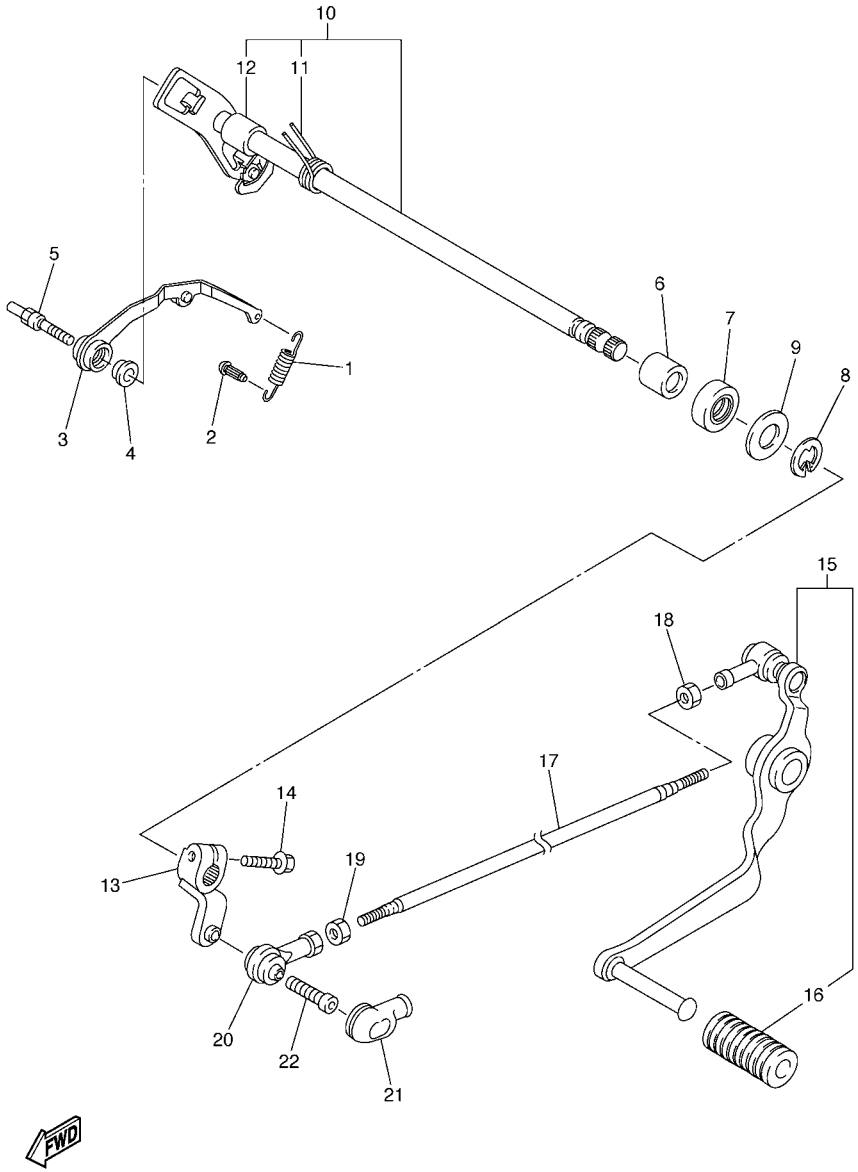

FIG. 20 EJE DE CAMBIO & PEDAL

REF. Nº	CODIGO Nº	DESCRIPCION	2D1R					OBSERVACIONES
1	5VY–18144–00	GANCHO DE RESORTE	1					
2	132–16346–00	GANCHO DE RESORTE	1					
3	5VY–18140–00	PALANCA DE TOPE COMPLETA	1					
4	90387–0804S	ESPACIADOR	1					
5	5VY–18127–10	PASADOR DE PALANCA	1					
6	93317–11295	COJINETE	2					
7	93102–12106	SELLO ACEITE (SD 12-22-5 HS)	1					
8	99002–10600	PRESILLA REDONDA	1					
9	90201–12575	ARANDELA PLANA	2					
10	2D1–18101–00	EJE SELECTOR COMPLETO	1					
11	90508–32020	.RESORTE DE TORSION	1					
12	90387–1211D	.ESPACIADOR	1					
13	2D1–18112–00	BRAZO DEL CAMBIO	1					
14	95022–06020	PERNO, DE BRIDA	1					
15	2D1–18110–00	PEDAL DE CAMBIO COMPLETO	1					
16	5EB–18113–00	.FUNDA DEL PEDAL DEL CAMBIO	1					
17	2D1–18115–00	VARILLA DEL CAMBIO	1					
18	90170–06228	TUERCA	1					
19	95304–06700	TUERCA	1					
20	5VX–18116–00	VARILLA DE CONECTOR 1	1					
21	5VX–18154–00	CUBIERTA GUARDAPOLVO	1					
22	90111–06098	TORNILLO	1					

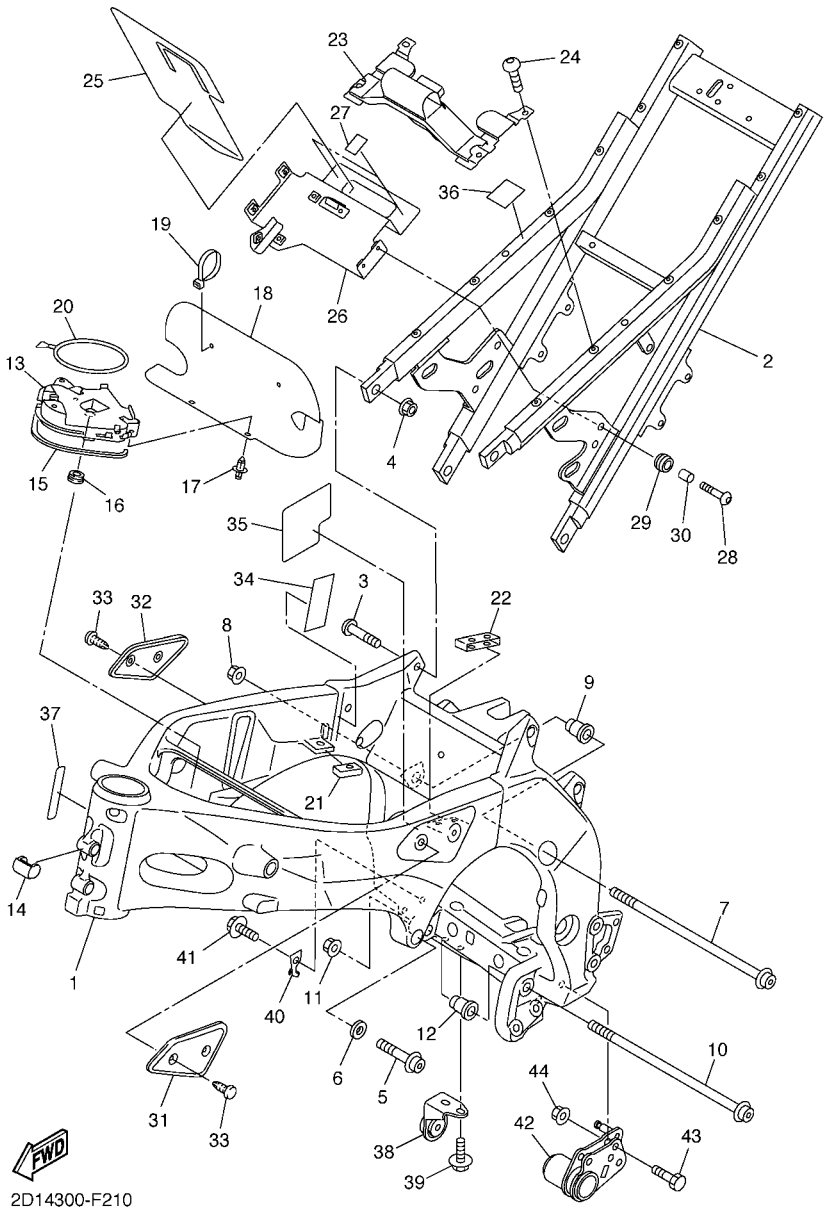

FIG. 21 CUADRO

REF. Nº	CODIGO Nº	DESCRIPCION	2D1R					OBSERVACIONES
1	2D1–21110–01–P0	ARMAZON COMPLETO	1					MBL2
2	2D1–21190–00–P0	CUADRO TRASERO COMPLETA	1					MBL2
3	90157–10001	TORNILLO CABEZA CONICA PLANA	4					
4	95604–10200	TUERCA DE AUTO-CIERRE	4					
5	95024–10040	PERNO, BRIDA	2					
6	90201–10020	ARANDELA PLANA	2					
7	90110–10024	TORNILLO ALLEN	1					
8	90179–10025	TUERCA	1					
9	4C8–21495–00	PERNO DE AJUSTE	1					
10	90110–10024	TORNILLO ALLEN	1					
11	90179–10025	TUERCA	1					
12	4C8–21495–00	PERNO DE AJUSTE	1					
13	2D1–2117N–00	CUBIERTA 3	1					
14	2D1–21399–00	TAPA	1					
15	2D1–2174Y–00	AMORTIGUADOR	1					
16	90480–01333	TAPON	1					
17	90269–06001	REMACHE	2					
18	2D1–2117G–00	PROTECTOR	1					
19	1UA–82591–00	BANDA	2					
20	3YX–21376–00	BANDA DE HERRAMIENTA	1					
21	2D1–24184–00	AMORTIGUADOR DE MONTAJE 4	1					
22	2D1–24185–00	AMORTIGUADOR DE MONTAJE 5	1					
23	2D1–21345–00	SOPORTE ACCESORIO DE DEPOSITO	1					
24	90149–06162	TORNILLO DE REGLAJE	4					
25	2D1–24183–00	AMORTIGUADOR DE MONTAJE 3	1					
26	2D1–21287–01	SOPORTE DE REGULADOR	1					
27	5YU–21639–00	AMORTIGUADOR 2	2					

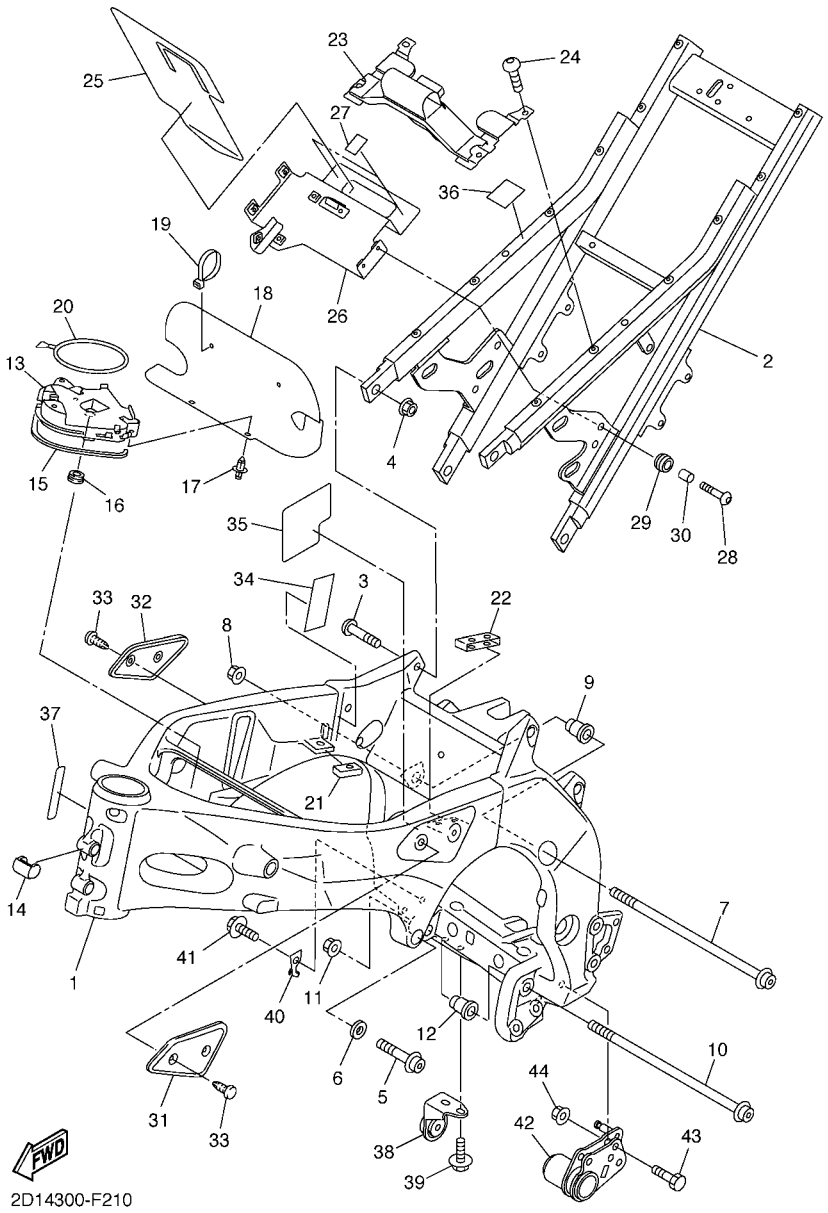

FIG. 21 CUADRO

REF. Nº	CODIGO Nº	DESCRIPCION	2D1R					OBSERVACIONES
28	90111–06098	TORNILLO	4					
29	90480–14013	TAPON	4					
30	90387–06026	ESPACIADOR	4					
31	2D1–24129–00	CUBIERTA LATERAL 1	1					
32	2D1–24139–00	CUBIERTA LATERAL 2	1					
33	90269–06003	REMACHE	4					
34	4PX–23426–00	AMORTIGUADOR	1					
35	2D1–21575–00	SELLO 1	1					
36	2D1–21268–10	SELLO	1					
37	2D1–2197E–00	PROTECTOR DE CUADRO	1					
38	2D1–27425–02	SOPORTE DE APOYAPIE 2	1					
39	95812–08016	TORNILLO DE REBORDE	2					
40	2D1–27267–00	GUIA DE CABLE	1					
41	95022–10016	PERNO, DE BRIDA	1					
42	3C3–27151–01	SOPORTE	1					
43	90101–10033	TORNILLO	2					
44	95602–10200	TUERCA DE AUTO-CIERRE	2					

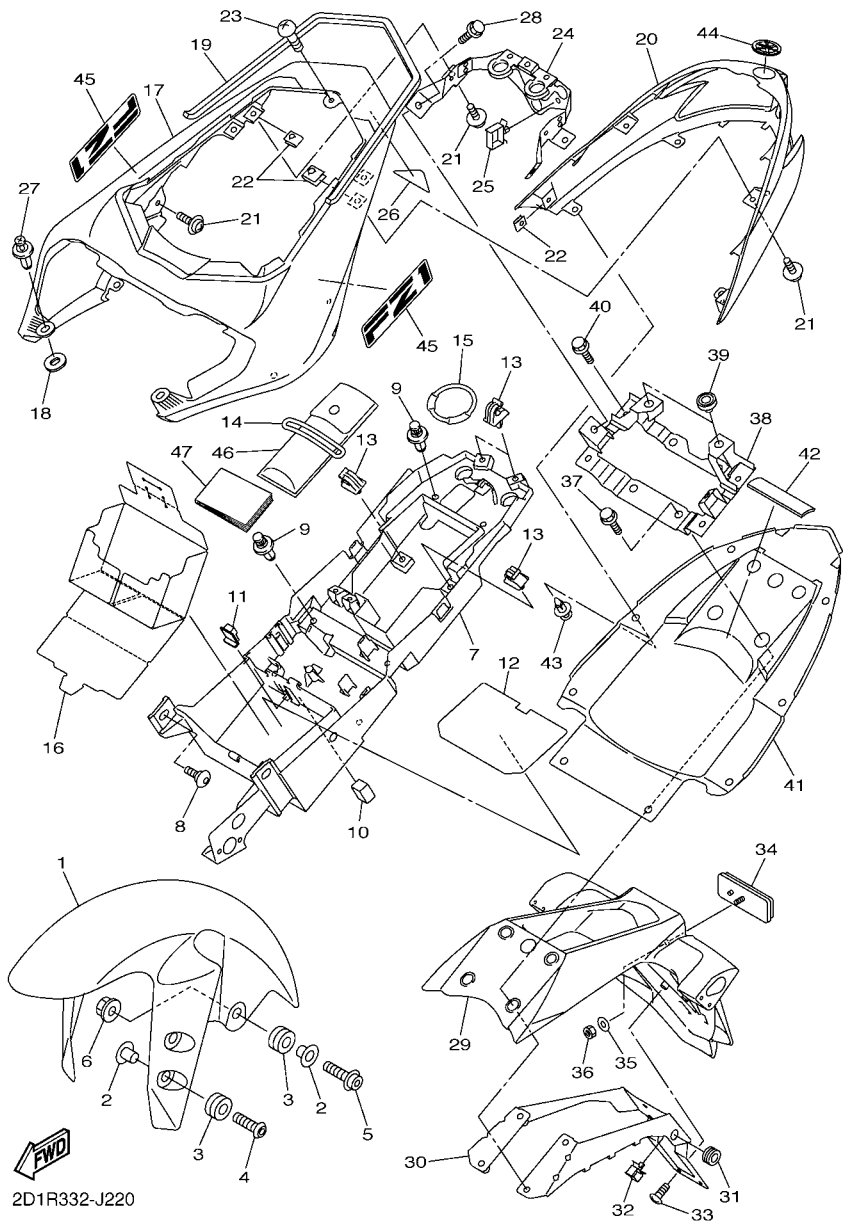

FIG. 22 GUARDABARRO

REF. Nº	CODIGO Nº	DESCRIPCION	2D1R					OBSERVACIONES
1	5PW–21511–00–P6	GUARDABARRO DELANTERO	1					UR PARA SMX
	5PW–21511–00–PB	GUARDABARRO DELANTERO	1					UR PARA BWC1
2	90387–065J6	ESPACIADOR	6					
3	90480–12072	TAPON	6					
4	90111–06043	TORNILLO	4					
5	90109–06031	PERNO	2					
6	95602–06200	TUERCA DE AUTO-CIERRE	2					
7	2D1–8212B–01	CAJA DE BATERIA	1					
8	90109–06253	PERNO	2					
9	90269–07077	REMACHE	4					
10	2D1–216A2–00	SELLO 2	1					
11	2D1–216A3–00	SELLO 3	1					
12	2D1–24182–00	AMORTIGUADOR DE MONTAJE 2	1					
13	90464–07259	BRIDA	4					
14	4XV–21376–00	BANDA DE HERRAMIENTA	1					
15	2D1–21646–00	BANDA	1					
16	2D1–82122–10	ASIENTO DE BATERIA	1					
17	2D1–21651–00–P0	TAPA DE GUARDABARRO TRAS.	1					UR PARA SMX
	2D1–21651–00–P5	TAPA DE GUARDABARRO TRAS.	1					UR PARA BWC1
18	5PW–2174X–00	AMORTIGUADOR	2					
19	2D1–24747–00	AMORTIGUADOR DE ASIENTO	1					
20	2D1–2163A–00	CUBIERTA TRAS GUARDABARRO 1	1					
21	90159–05056	TORNILLO CON VALONA	6					
22	90183–051A0	TUERCA DE RESORTE	6					
23	98902–06012	TORNILLO DE AJUSTE	1					
24	2D1–2117E–00	SOPORTE DE LANTERNA TRAZERA	1					
25	90464–16021	BRIDA	1					

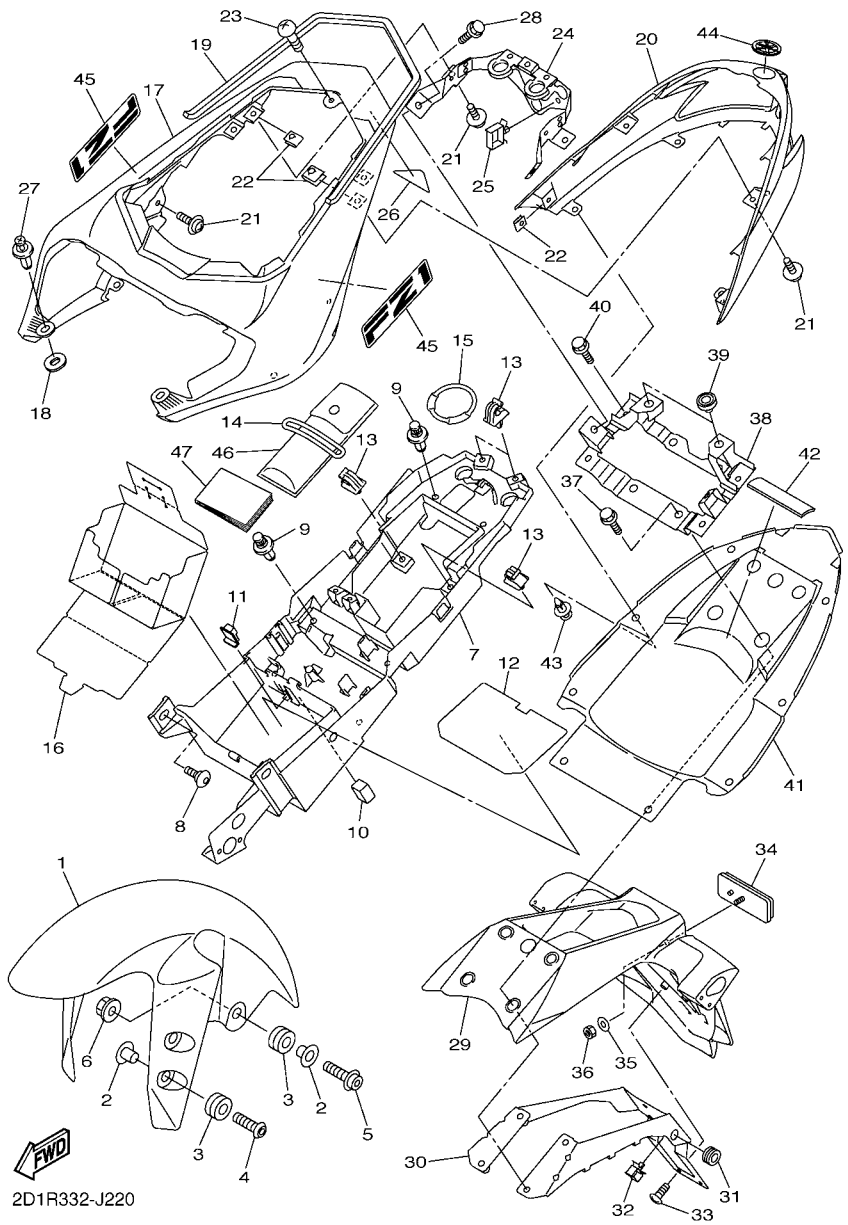

FIG. 22 GUARDABARRO

REF. Nº	CODIGO Nº	DESCRIPCION	2D1R					OBSERVACIONES
26	2D1–21669–00	SELLO	1					
27	90269–07076	REMACHE	2					
28	95822–08012	TORNILLO DE REBORDE	2					
29	2D1–21629–00	GUARDABARRO INFERIOR	1					
30	2D1–21688–00	SOPORTE	1					
31	90480–13004	TAPON	2					
32	90464–16021	BRIDA	1					
33	97702–50016	TORNILLO ROSCA HEMBRA	6					
34	3Y6–85130–02	REFLECTOR TRASERO COMPLETO	1					
35	90201–05043	ARANDELA PLANA	1					
36	95602–05100	TUERCA AUTOBLOCANTE	1					
37	95812–08025	TORNILLO DE REBORDE	4					
38	2D1–21261–00	SOPORTE GUARDABARRO TRASERO	1					
39	22W–24741–00	COJIN DE ASIENTO	2					
40	95822–06020	TORNILLO DE REBORDE	4					
41	2D1–21611–00	GUARDABARRO TRASERO	1					
42	2D1–21639–00	AMORTIGUADOR 2	1					
43	90269–07077	REMACHE	8					
44	4KN–2836B–10	MARCA	1					
45	2D1–2163G–F0	EMBLEMA	2					UR PARA SMX
	2D1–2163G–G0	EMBLEMA	2					UR PARA BWC1
46	2D1–28100–00	JUEGO DE HERRAMIENTAS	1					
47	2D1–28199–S4	MANUAL DEL PROPRIETARIO	1					

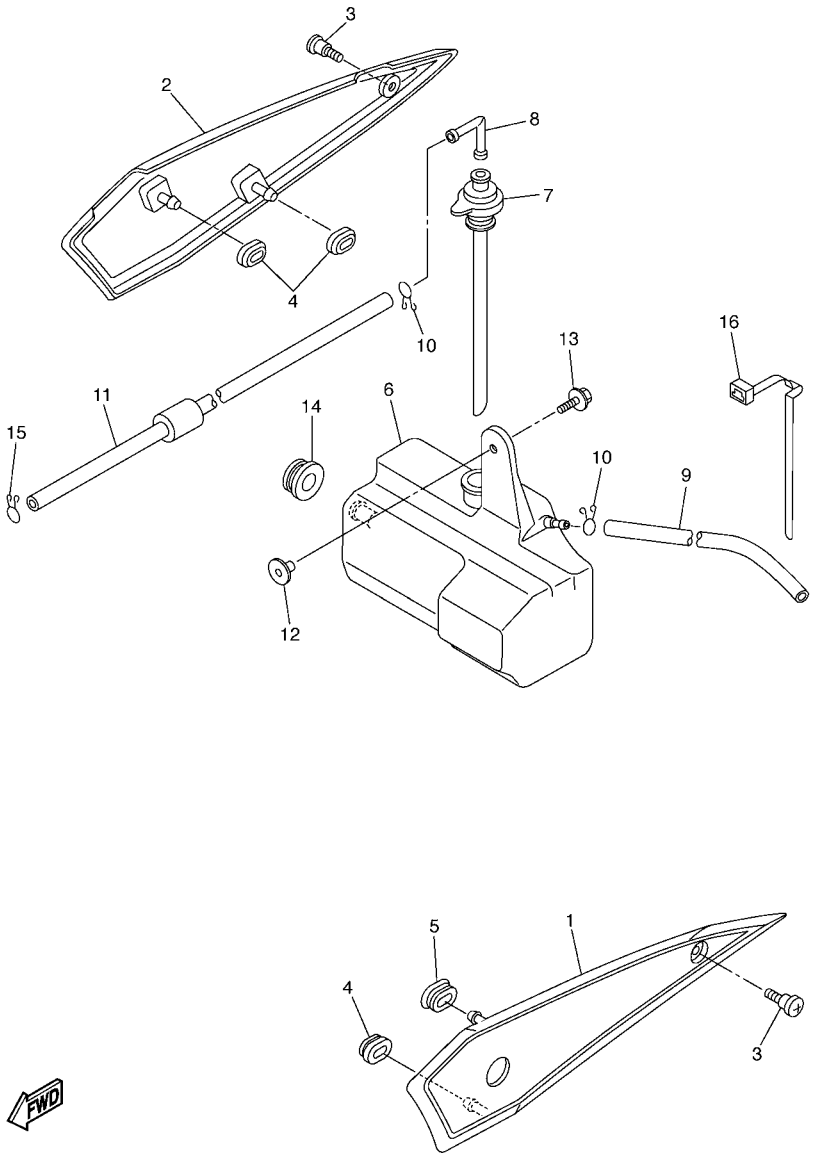

FIG. 23 CUBIERTA LATERAL

REF. Nº	CODIGO Nº	DESCRIPCION	2D1R					OBSERVACIONES
1	2D1–21711–00	CUBIERTA LATERAL 1	1					
2	2D1–21721–00	CUBIERTA LATERAL 2	1					
3	90149–06165	TORNILLO DE REGLAJE	2					
4	90480–01559	TAPON	3					
5	2D1–21719–00	ANILLO PROTECTOR	1					
6	2D1–21871–00	TANQUE DE RECUPERACION	1					
7	5VY–21875–00	TAPA	1					
8	26H–21828–00	CODO	1					
9	90445–08022	TUBO	1					
10	90467–080A1	PRESILLA	2					
11	90445–087K6	TUBO (L700)	1					
12	90387–062M9	ESPACIADOR	1					
13	90119–06230	TORNILLO CON ARANDELA	1					
14	90480–20001	TAPON	1					
15	90467–080A1	PRESILLA	1					
16	90464–07M40	BRIDA	1					

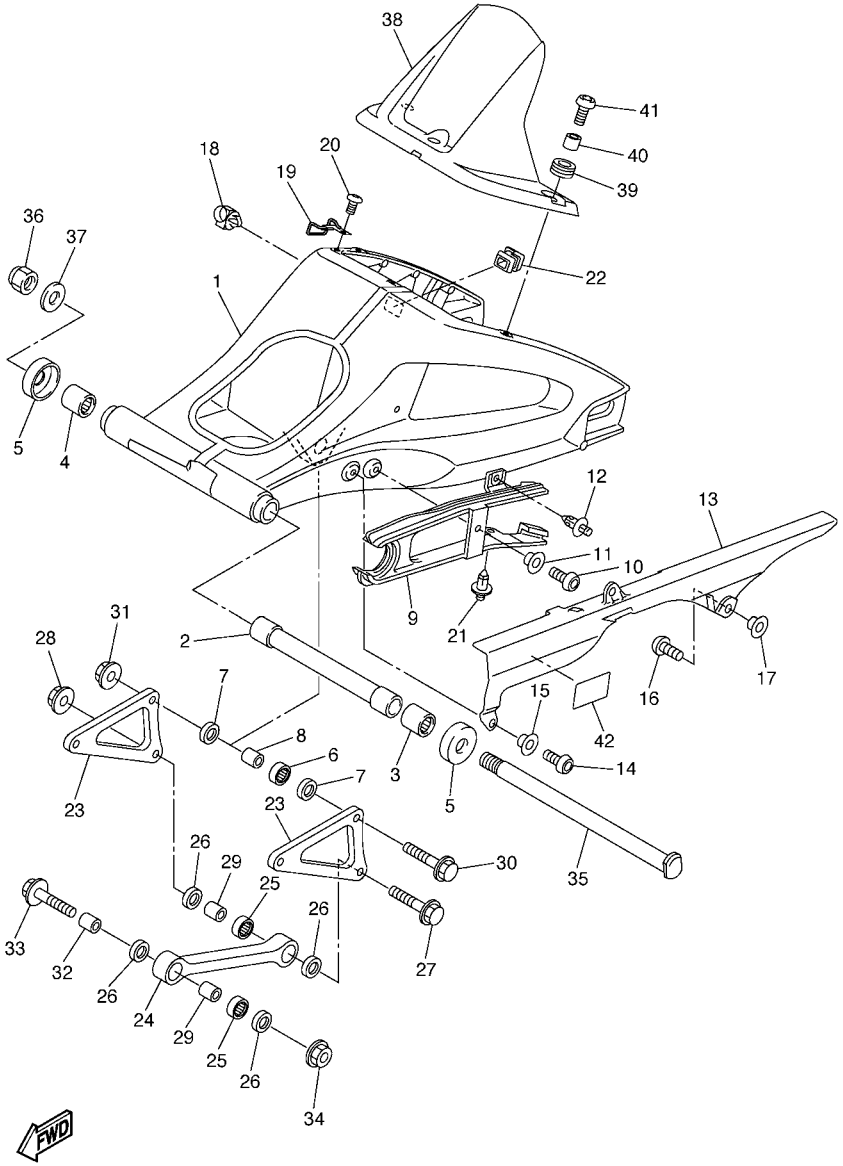

FIG. 24 BRAZO TRASERO

REF. Nº	CODIGO Nº	DESCRIPCION	2D1R					OBSERVACIONES
1	2D1–22110–11	BRAZO TRASERO COMPLETO	1					
2	2D1–22184–00	BUJE	1					
3	93317–42599	COJINETE	1					
4	93315–42536	COJINETE DE RODILLOS	1					
5	5JJ–22128–00	TAPA DE EMPIJE 1	2					
6	93315–41762	COJINETE DE RODILLOS	1					
7	93109–17071	SELLO ACEITE	2					
8	90387–1012A	ESPACIADOR	1					
9	2D1–22151–00	SELLO DE GUARDA	1					
10	92012–06014	PERNO	1					
11	90387–06130	ESPACIADOR	1					
12	90269–07007	REMACHE	1					
13	5SL–22311–00	CABRECADENA	1					
14	92012–06014	PERNO	1					
15	90387–06130	ESPACIADOR	1					
16	90110–06102	TORNILLO ALLEN	2					
17	90387–06009	ESPACIADOR	2					
18	90464–17003	BRIDA	1					
19	2D1–25887–00	SOPORTE DE MANGUERA FRENO	1					
20	92012–06014	PERNO	1					
21	90269–07008	REMACHE	1					
22	2D1–22117–00	TAPA	1					
23	2D1–2217A–10	BRAZO REEURIO	2					
24	2D1–2217M–00	BRAZO 1	1					
25	93315–31758	COJINETE DE RODILLOS	2					
26	93109–17071	SELLO ACEITE	4					
27	90105–10283	TORNILLO	1					

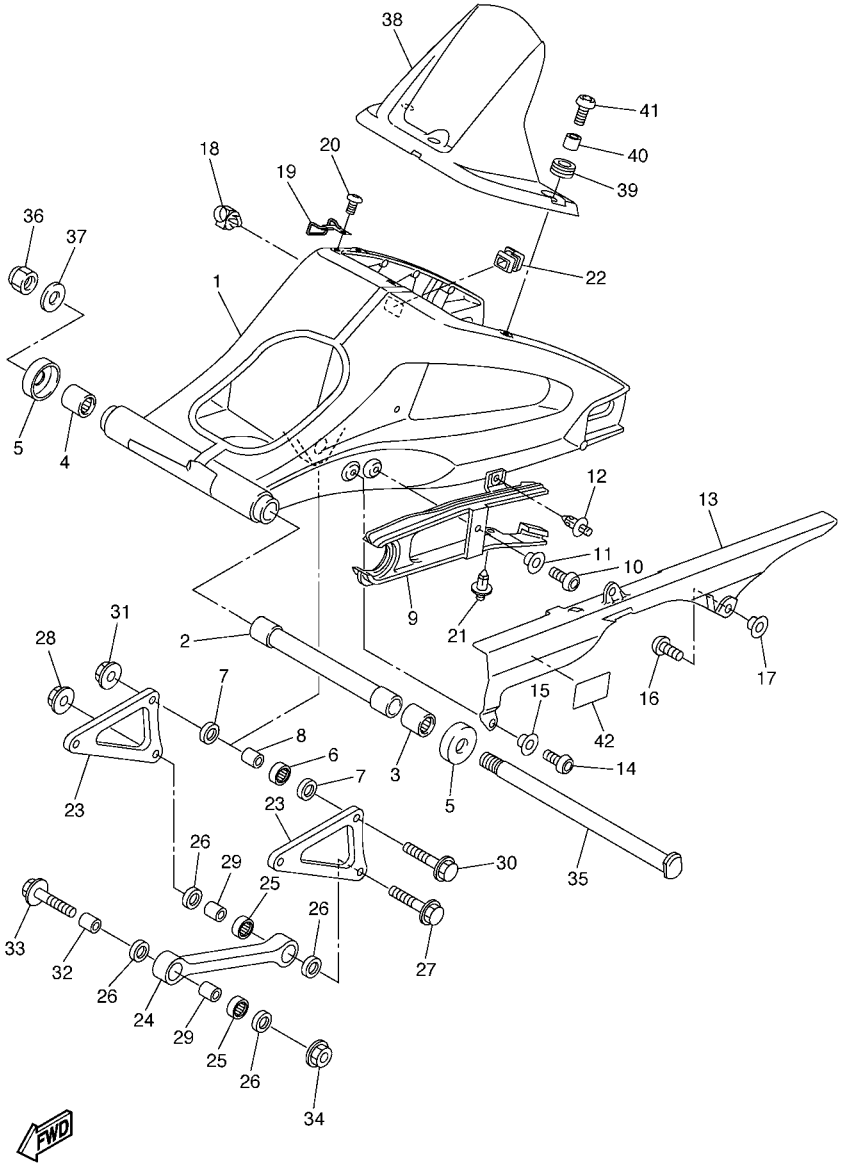

FIG. 24 BRAZO TRASERO

REF. Nº	CODIGO Nº	DESCRIPCION	2D1R					OBSERVACIONES
28	95602–10200	TUERCA DE AUTO-CIERRE	1					
29	90387–1012A	ESPACIADOR	2					
30	90105–10283	TORNILLO	2					
31	95602–10200	TUERCA DE AUTO-CIERRE	2					
32	90387–10043	ESPACIADOR	1					
33	90105–10211	TORNILLO	1					
34	95602–10200	TUERCA DE AUTO-CIERRE	1					
35	2D1–22141–00	EJE DEL BARCULANTE	1					
36	90185–18167	TUERCA AUTOBLOCANTE	1					
37	90201–18013	ARANDELA PLANA	1					
38	2D1–21650–00	GUARDABARRO TRANSERO COMP.	1					
39	90480–12003	TAPON	3					
40	90387–06219	ESPACIADOR	3					
41	90149–06302	TORNILLO DE REGLAJE	3					
42	14B–21668–00	ETIQUETA DE FRANJA	1					

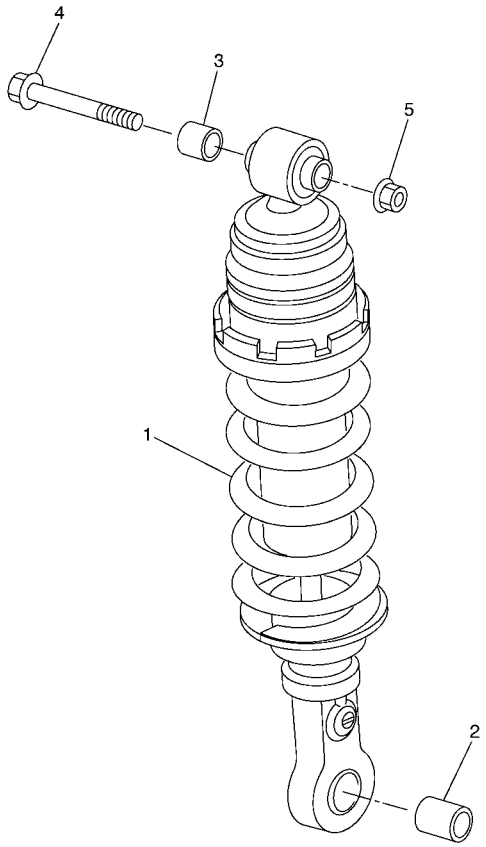

2D11300-E250

FIG. 25 SUSPENSION TRASERO

REF. Nº	CODIGO Nº	DESCRIPCION	2D1R					OBSERVACIONES
1	2D1–22210–51	AMORTIGUADOR TRASERO COMPLETO	1					UR PARA SMX
	2D1–22210–41	AMORTIGUADOR TRASERO COMPLETO	1					UR PARA BWC1
2	90387–1012A	ESPACIADOR	1					
3	90387–10043	ESPACIADOR	1					
4	90105–10211	TORNILLO	1					
5	95602–10200	TUERCA DE AUTO-CIERRE	1					

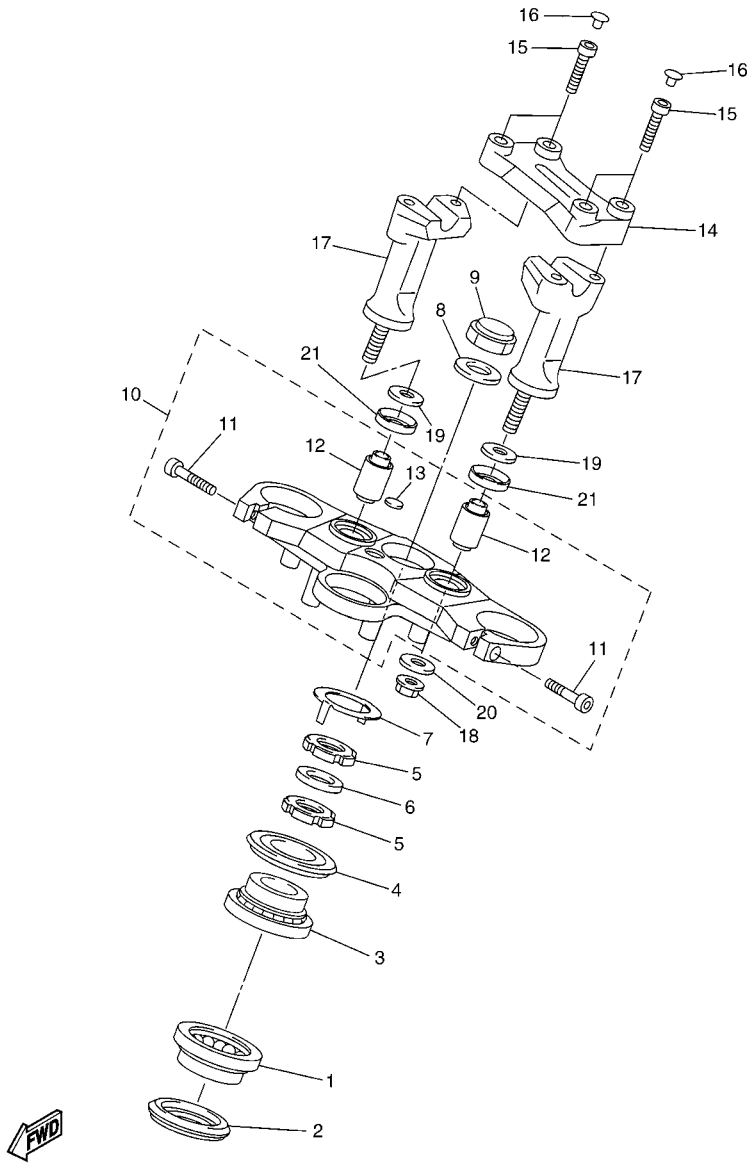

2D1B300-G260

FIG. 26 DIRECCION

REF. Nº	CODIGO Nº	DESCRIPCION	2D1R					OBSERVACIONES
1	93399–99957	COJINETE	1					
2	3FV–23462–00	SELLO PARA POLVO	1					
3	93399–99932	COJINETE	1					
4	4XV–23415–01	CUBIERTA DE PISTA DE BOLAS 1	1					
5	90179–30691	TUERCA	2					
6	90202–30235	ARANDELA DE PLANA	1					
7	4XV–23418–00	ARANDELA ESPECIAL	1					
8	90201–281U8	ARANDELA PLANA	1					
9	90176–28083	TUERCA CORONA	1					
10	2D1–23405–00	PLATINA SUPERIOR	1					
11	91314–08030	.TORNILLO ALLEN	2					
12	3VD–23434–00	.SOPORTE DE AMORTIGUADOR	2					
13	4XV–2341B–00	.EMBLEMA	1					
14	2D1–23441–00	SOPORTE DE MANUBRIO	1					
15	91312–08030	TORNILLO	4					
16	90338–08163	TAPON	4					
17	2D1–23442–00	SOPORTE DE MANUBRIO INFERIOR	2					
18	95602–10200	TUERCA DE AUTO-CIERRE	2					
19	92902–10200	ARANDELA	2					
20	90201–10065	ARANDELA PLANA	2					
21	5YU–23445–00	AMORTIGUADOR	2					

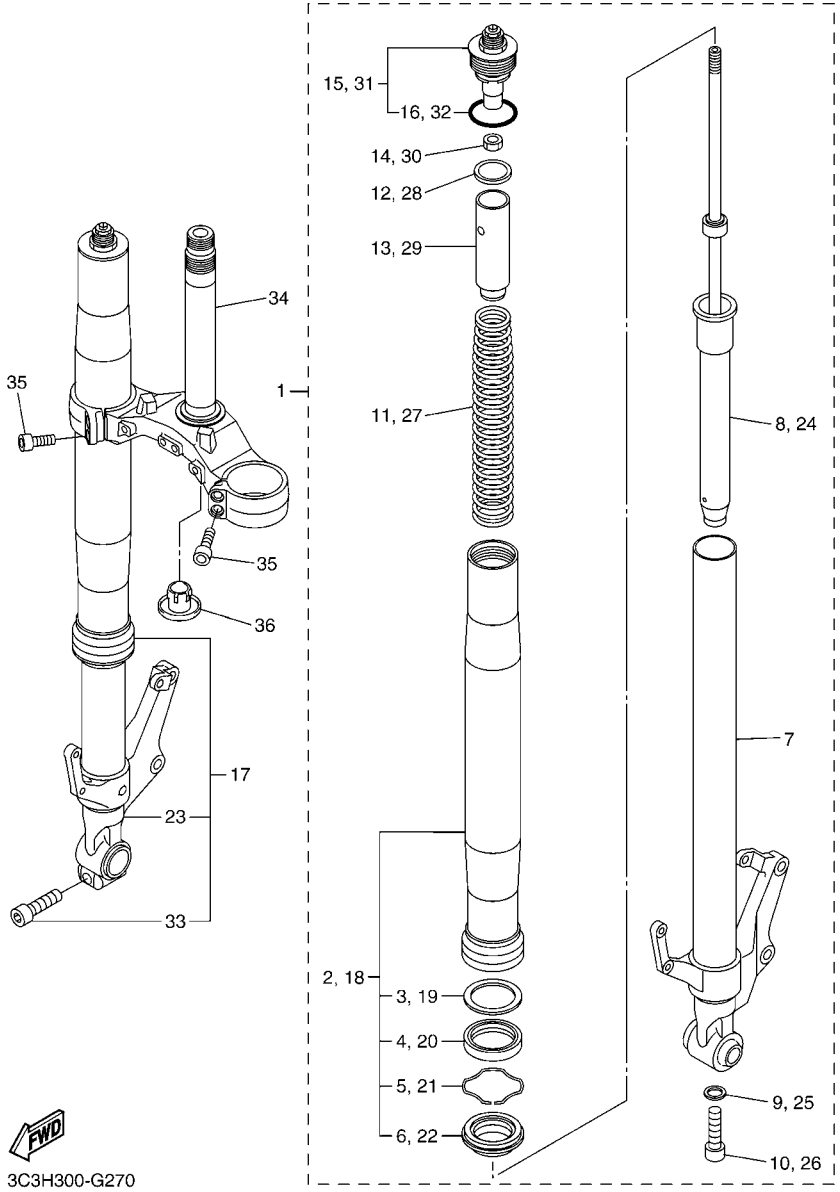

FIG. 27 HORQUILLA DELANTERA

REF. Nº	CODIGO Nº	DESCRIPCION	2D1R					OBSERVACIONES
1	2D1–23102–01	HORQUILLA DELANTERA COMPL.(MI)	1					
2	2D1–23136–00	.TUBO EXTERIOR	1					
3	5PW–23146–00	..ARANDELA DE SELLO DE ACEITE	1					
4	4PU–23145–01	..RETEN DE ACEITE	1					
5	4V4–23153–L0	..ANILLO DE ENGANCHE	1					
6	4PU–23144–00	..GUARDAPOLVO	1					
7	2D1–23110–00	.TUBO INTERIOR COMPLETO 1	1					
8	2D1–23170–11	.CILINDRO COMPL DE HORQ DELANT	1					
9	509–23158–L0	.EMPAQUE	1					
10	3D8–23181–00	.TORNILLO CABEZAHEXAGONAL	1					
11	2D1–23141–00	.RESORTE HORQUILLA DELANT.	1					
12	5VY–12277–00	.ARANDELA	1					
13	5VY–23118–00	.SEPARADOR	1					
14	3LC–23357–00	.TUERCA	1					
15	2D1–23111–00	.PERNO DE TAPA	1					
16	3XJ–23147–L0	..ARO	1					
17	2D1–23103–01	HORQUILLA DELANTERA COMPL.(MD)	1					
18	2D1–23136–00	.TUBO EXTERIOR	1					
19	5PW–23146–00	..ARANDELA DE SELLO DE ACEITE	1					
20	4PU–23145–01	..RETEN DE ACEITE	1					
21	4V4–23153–L0	..ANILLO DE ENGANCHE	1					
22	4PU–23144–00	..GUARDAPOLVO	1					
23	2D1–23120–00	.TUBO INTERIOR COMPLETO 2	1					
24	2D1–23170–01	.CILINDRO COMPL DE HORQ DELANT	1					
25	509–23158–L0	.EMPAQUE	1					
26	3D8–23181–00	.TORNILLO CABEZAHEXAGONAL	1					
27	2D1–23141–00	.RESORTE HORQUILLA DELANT.	1					

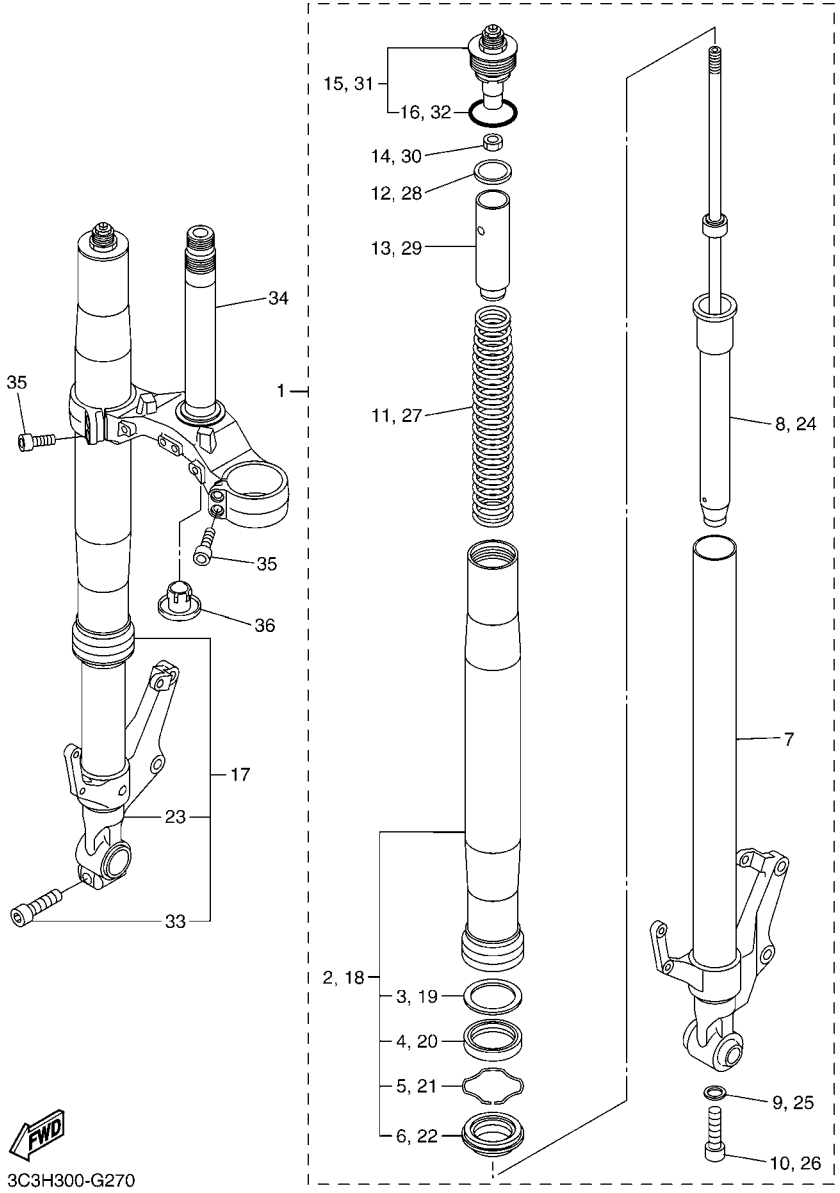

FIG. 27 HORQUILLA DELANTERA

REF. Nº	CODIGO Nº	DESCRIPCION	2D1R					OBSERVACIONES
28	5VY–12277–00	.ARANDELA	1					
29	5VY–23118–00	.SEPARADOR	1					
30	3LC–23357–00	.TUERCA	1					
31	2D1–23111–00	.PERNO DE TAPA	1					
32	3XJ–23147–L0	..ARO	1					
33	91314–08040	.TORNILLO ALLEN	1					
34	2D1–23340–00	PLATINA INFERIOR COMPLETA	1					
35	91314–08030	TORNILLO ALLEN	4					
36	4KM–23123–01	CUBIERTA INFERIOR	1					

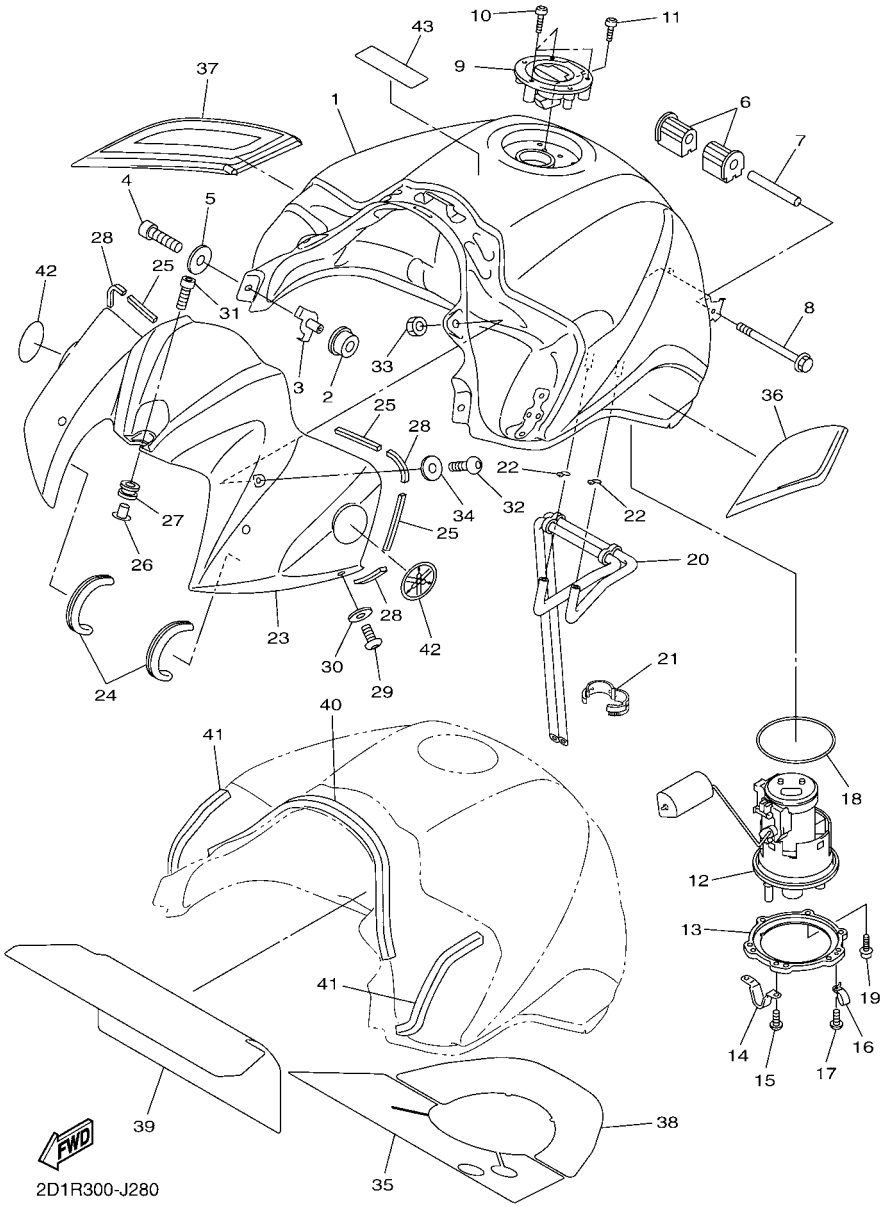

FIG. 28 DEPOSITO DE COMBUSTIBLE

REF. Nº	CODIGO Nº	DESCRIPCION	2D1R					OBSERVACIONES
1	2D1–YK241–00–P0	DEPOSITO DE COMBUSTIBLE COMP.	1					UR PARA SMX
	2D1–YK241–00–P9	DEPOSITO DE COMBUSTIBLE COMP.	1					UR PARA BWC1
2	5VY–24181–00	AMORTIGUADOR DE MONTAJE 1	2					
3	2D1–2412G–00	COLLAR	2					
4	91312–06016	TORNILLO	2					
5	90201–06086	ARANDELA PLANA	2					
6	5VX–24181–00	AMORTIGUADOR DE MONTAJE 1	2					
7	90387–061W6	ESPACIADOR	1					
8	91312–06090	TORNILLO	1					
9	5JJ–24602–00	TAPON COMPLETO	1					
10	90110–05112	TORNILLO ALLEN	3					
11	91312–05010	TORNILLO	1					
12	2D1–13907–02	BOMBA DE COMBUSTIBLE COMPLETA	1					
13	2D1–24491–00	SOPORTE BOMBA COMBUSTIBLE	1					
14	2D1–24192–00	SOPORTE DE DEPOSITO COMBUST.2	1					
15	98902–05008	TORNILLO DE AJUSTE	2					
16	90461–10010	GRAPA	1					
17	90154–05035	TORNILLO DE LIGAR	1					
18	5JW–24486–00	ANILLO O	1					
19	90110–05028	TORNILLO ALLEN	6					
20	2D1–24317–10	TUBO 7	1					
21	90464–16001	BRIDA	1					
22	90467–09006	PRESILLA	2					
23	2D1–2171A–00–P0	CUBIERTA, TECHO	1					UR PARA SMX
	2D1–2171A–00–P5	CUBIERTA, TECHO	1					UR PARA BWC1
24	2D1–28345–01	MOLDURA 1	2					
25	4XV–2834E–00	AMORTIGUADOR 3	4					

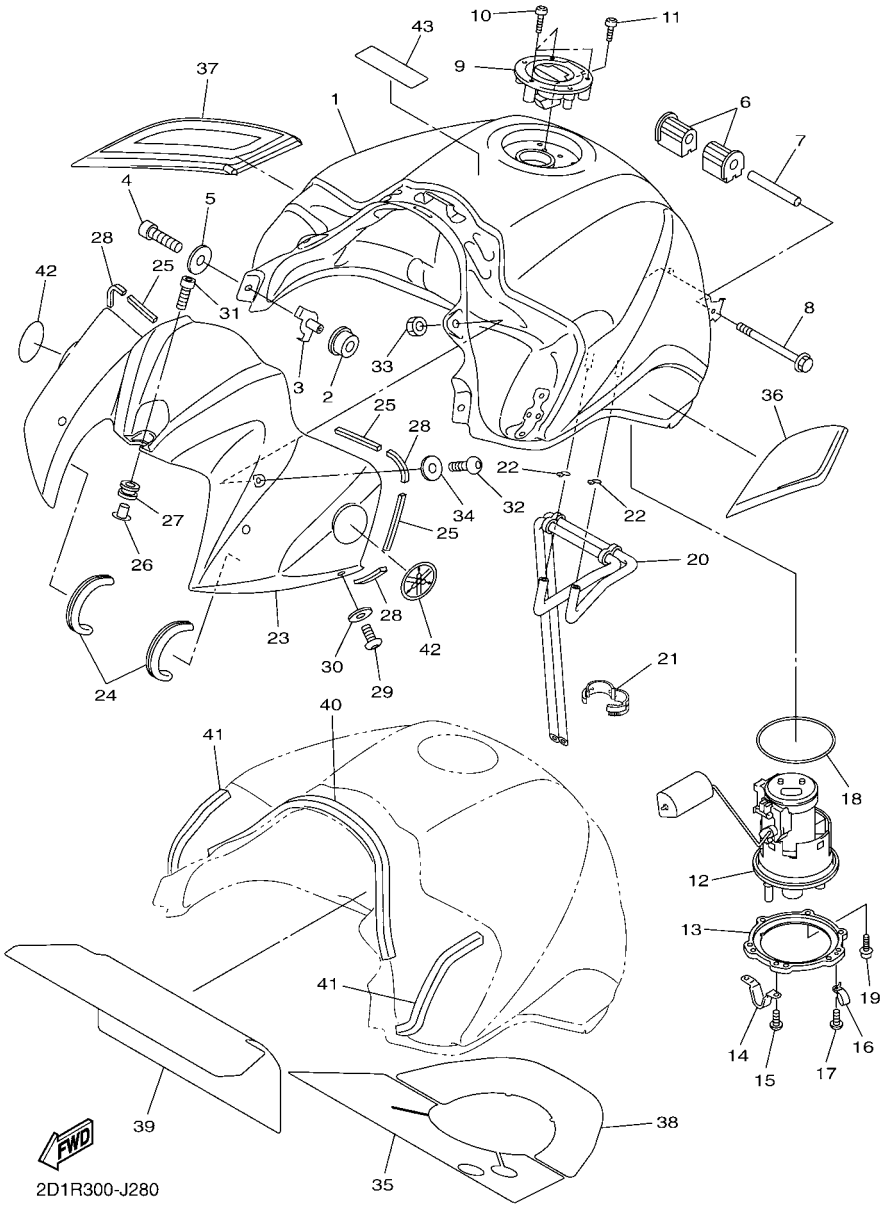

FIG. 28 DEPOSITO DE COMBUSTIBLE

REF. Nº	CODIGO Nº	DESCRIPCION	2D1R					OBSERVACIONES
26	90387–06222	ESPACIADOR	1					
27	90480–12314	TAPON	1					
28	2D1–24181–00	AMORTIGUADOR DE MONTAJE 1	4					
29	90111–05019	TORNILLO	2					
30	90202–05224	ARANDELA DE PLANA	2					
31	90110–06233	TORNILLO ALLEN	1					
32	90111–05024	TORNILLO	2					
33	90179–05003	TUERCA	2					
34	90202–05088	ARANDELA DE PLANA	2					
35	2D1–2414N–00	EQUILIBRIO, CUBIERTA	1					
36	2D1–24106–00	CUBIERTA LATERAL COMPLETA 1	1					
37	2D1–24108–00	CUBIERTA LATERAL COMPLETA 2	1					
38	2D1–2414K–00	EQUILIBRIO, CUBIERTA 3	1					
39	2D1–2414H–00	EQUILIBRIO, CUBIERTA	1					
40	2D1–2414P–00	EQUILIBRIO, CUBIERTA	1					
41	2D1–2414R–00	EQUILIBRIO, CUBIERTA	2					
42	5SL–2413B–00	EMBLEMA	2					
43	1CA–21568–00	ETIQUETA DE PRECAUCION	1					

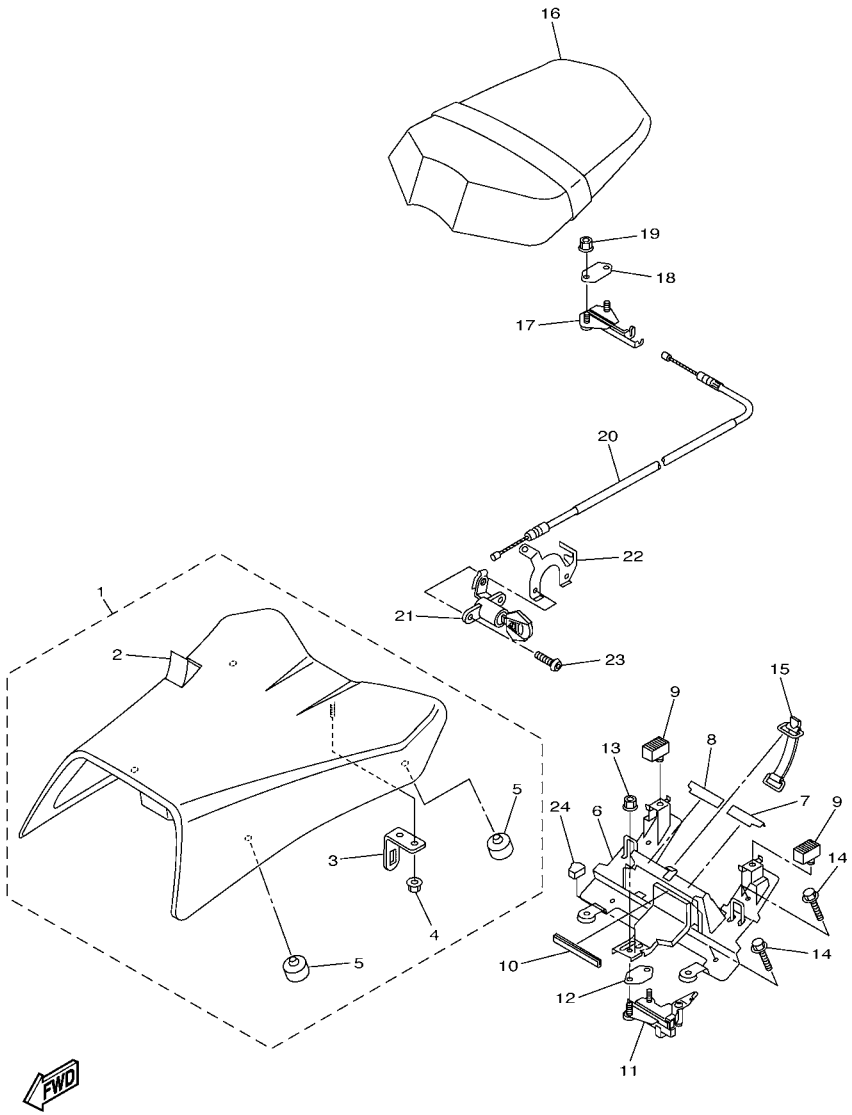

2D1J300-H290

FIG. 29 ASIENTO

REF. Nº	CODIGO Nº	DESCRIPCION	2D1R					OBSERVACIONES
1	2D1–24710–00	ASIENTO SIMPLE COMPLETO	1					
2	2D1–24711–00	.CUBIERTA DE ASIENTO SIMPLE	1					
3	4HM–24728–00	.SOPORTE DE ASIENTO	1					
4	95602–06200	.TUERCA DE AUTO-CIERRE	1					
5	278–27114–00	.TOPE DE PUNTAL PRINCIPAL	4					
6	2D1–21341–01	SOPORTE DE ASIENTO 1	1					
7	2D1–2476U–00	PROTECTOR	1					
8	2D1–2476V–00	PROTECTOR2	1					
9	3C3–24741–00	COJIN DE ASIENTO	2					
10	2D1–24785–00	MOLDURA DE ASIENTO	1					
11	2D1–24780–02	CERRADURA SILLIN COMPLETO	1					
12	4BP–24792–00	PLACA	1					
13	95702–06500	TUERCA DE BRIDA	2					
14	95822–06020	TORNILLO DE REBORDE	4					
15	18G–82131–00	TIRANTE DE BATERIA	1					
16	2D1–24750–00	ASIENTO TANDEM COMPLETO	1					
17	4BP–24780–00	CERRADURA SILLIN COMPLETO	1					
18	4BP–24792–00	PLACA	1					
19	95702–06500	TUERCA DE BRIDA	2					
20	2D1–2478E–00	CABLE	1					
21	2TV–W2470–00	JUEGO DE ROTOR	1					
22	4XV–2117K–00	SOPORTE DE CERRADURA	1					
23	90149–06134	TORNILLO DE REGLAJE	2					
24	2D1–24665–00	AMORTIGUADOR	1					

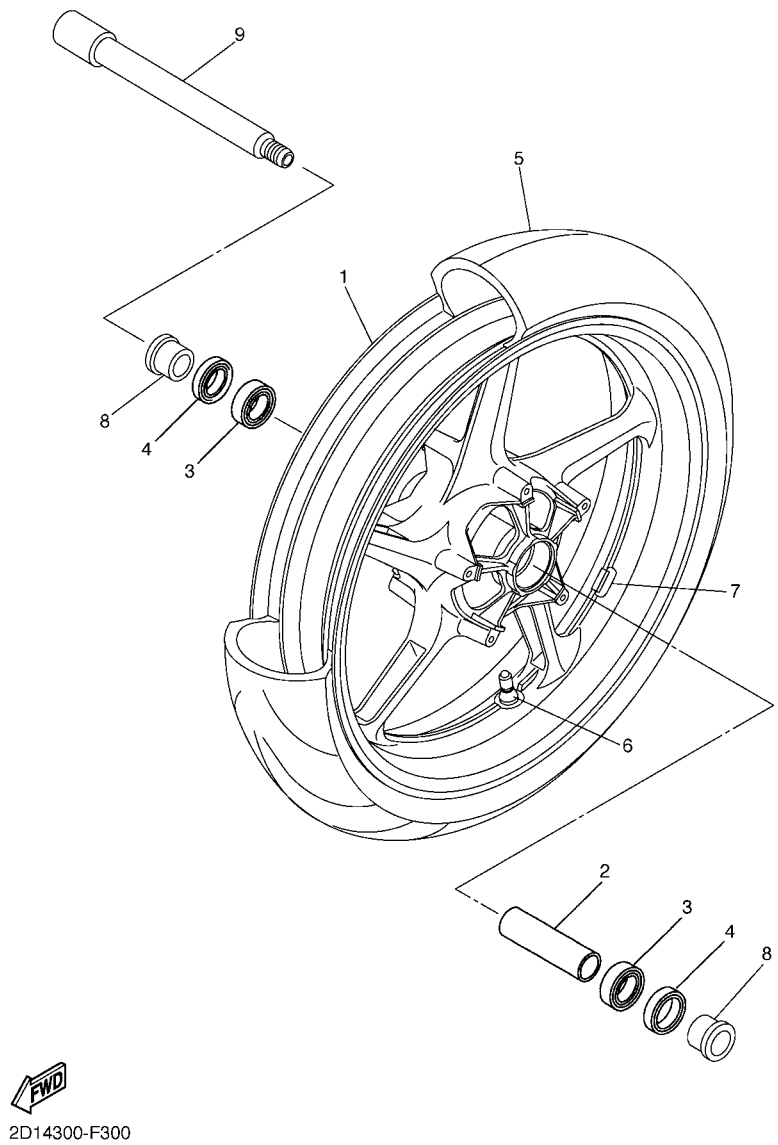

FIG. 30 RUEDA DELANTERA

REF. Nº	CODIGO Nº	DESCRIPCION	2D1R					OBSERVACIONES
1	5VY–25168–00–98	RUEDA FUNDIDA DELANTERA	1					LGB PARA SMX
	5VY–25168–00–0X	RUEDA FUNDIDA DELANTERA	1					LGB PARA BWC1
2	4XV–25117–00	ESPACIADOR DE COJINETE	1					
3	93306–00420	COJINETE	2					
4	93106–28043	SELLO ACEITE	2					
5	94112–17094	NEUMATICO(120/70 ZR17M/C 58W)	1					DUNLOP
6	93900–00030	VALVULA DE ARO (TR412)	1					TAIHEIYO
7	5MT–25398–00	BALANCEADOR DE RUEDA (10G)	1					UN
	5MT–25398–10	BALANCEADOR DE RUEDA (20G)	1					UN
	5MT–25398–20	BALANCEADOR DE RUEDA (30G)	1					UN
8	90387–22002	ESPACIADOR	2					
9	4XV–25181–10	EJE DE LA RUEDA	1					

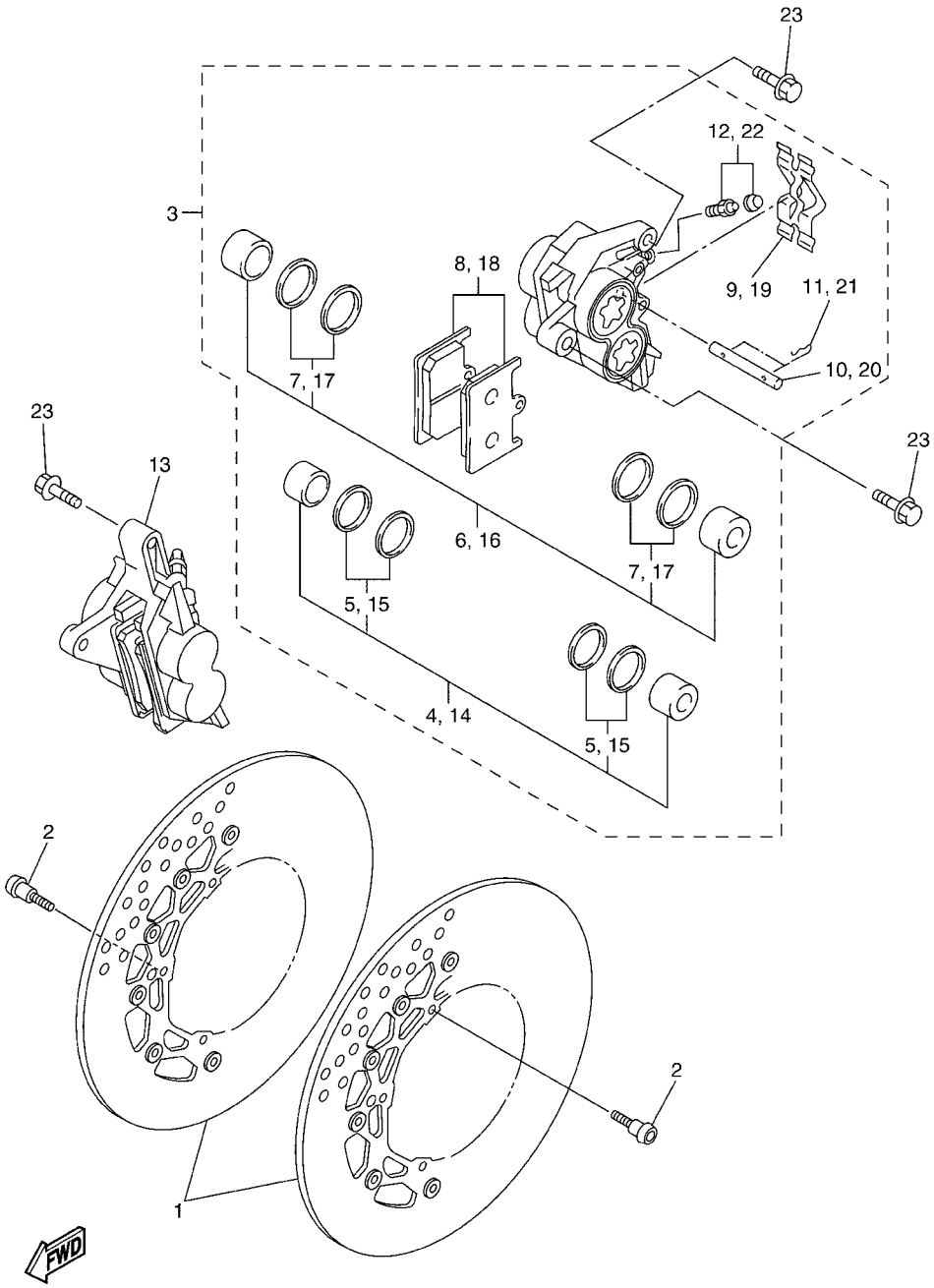

FIG. 31 CALIBRE FRENO DELANTERA

REF. Nº	CODIGO Nº	DESCRIPCION	2D1R					OBSERVACIONES
1	5D0–2581T–00	DISCO DE FRENO	2					
2	90149–06043	TORNILLO DE REGLAJE	10					
3	2D1–2580T–00	CALIBRE COMPLETO (IZQUIERDO)	1					
4	4SV–W0057–00	.PISTON COMPLETO PINZA	1					
5	3MA–W0047–10	..JUEGO DE RETENES DE PINZA	1					
6	4SV–W0057–10	.PISTON COMPLETO PINZA	1					
7	3GM–W0047–10	..JUEGO DE RETENES DE PINZA	1					
8	5SL–W0045–00	.JUEGO DE COJIN DE FRENO	1					
9	4SV–25919–00	.SOPORTE DE PASTILLAS	1					
10	4SV–25924–00	.PASADOR	1					
11	3GM–25925–00	.PRESILLA	2					
12	1J3–W0048–00	.CJTO TORNILLO DE PURGA	1					
13	2D1–2580U–00	CALIBRE COMPLETO (DERECHO)	1					
14	4SV–W0057–00	.PISTON COMPLETO PINZA	1					
15	3MA–W0047–10	..JUEGO DE RETENES DE PINZA	1					
16	4SV–W0057–10	.PISTON COMPLETO PINZA	1					
17	3GM–W0047–10	..JUEGO DE RETENES DE PINZA	1					
18	5SL–W0045–00	.JUEGO DE COJIN DE FRENO	1					
19	4SV–25919–00	.SOPORTE DE PASTILLAS	1					
20	4SV–25924–00	.PASADOR	1					
21	3GM–25925–00	.PRESILLA	2					
22	1J3–W0048–00	.CJTO TORNILLO DE PURGA	1					
23	90105–10638	TORNILLO	4					

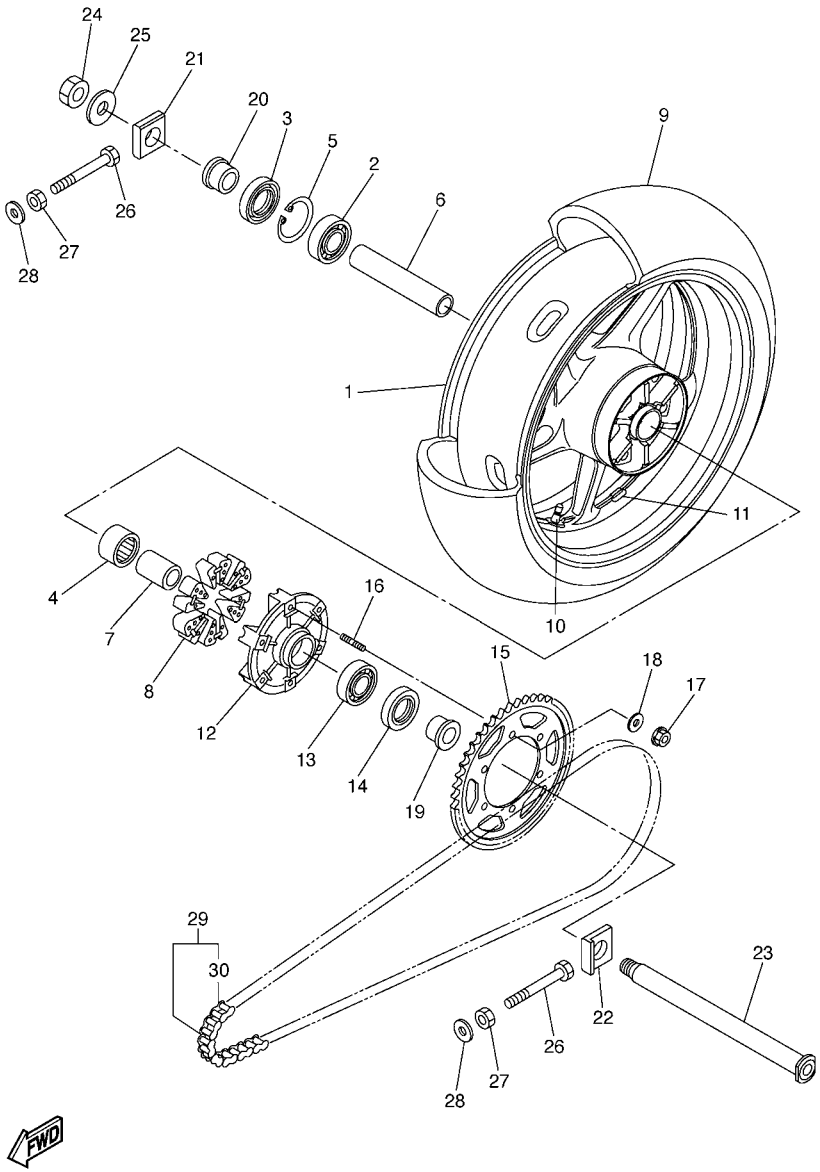

2D11300-E320

FIG. 32 RUEDA TRASERA

REF. Nº	CODIGO Nº	DESCRIPCION	2D1R					OBSERVACIONES
1	5VY–25338–00–98	RUEDA FUNDIDA TRASERA	1					LGB PARA SMX
	5VY–25338–00–0X	RUEDA FUNDIDA TRASERA	1					LGB PARA BWC1
2	93306–20531	COJINETE	1					
3	93106–40013	SELLO ACEITE	1					
4	93317–33590	COJINETE	1					
5	93420–61M07	SEGURO	1					
6	5PW–25317–00	ESPACIADOR DE COJINETE	1					
7	2D1–25377–00	COLLAR DE RUEDA	1					
8	5VX–25364–00	AMORTIGUADOR	6					
9	94119–17062	NEUMATICO(190/50 ZR17M/C 73W)	1					DUNLOP
10	93900–00030	VALVULA DE ARO (TR412)	1					TAIHEIYO
11	5MT–25398–00	BALANCEADOR DE RUEDA (10G)	1					UN
	5MT–25398–10	BALANCEADOR DE RUEDA (20G)	1					UN
	5MT–25398–20	BALANCEADOR DE RUEDA (30G)	1					UN
12	2D1–25366–00	EMBRAGUE DE MASA	1					
13	93306–20531	COJINETE	1					
14	93106–40013	SELLO ACEITE	1					
15	2D1–25445–20	CORONA (45T)	1					
16	90116–10048	ESPARRAGO	6					
17	90185–10009	TUERCA AUTOBLOCANTE	6					
18	90201–10021	ARANDELA PLANA	6					
19	90387–28001	ESPACIADOR	1					
20	2D1–25383–00	COLLAR DE RUEDA	1					
21	5VY–25388–00	TIRADOR DE CADENA 1	1					
22	5VY–25389–01	TIRADOR DE CADENA 2	1					
23	2D1–25381–00	EJE DE RUEDA	1					
24	90185–24007	TUERCA AUTOBLOCANTE	1					

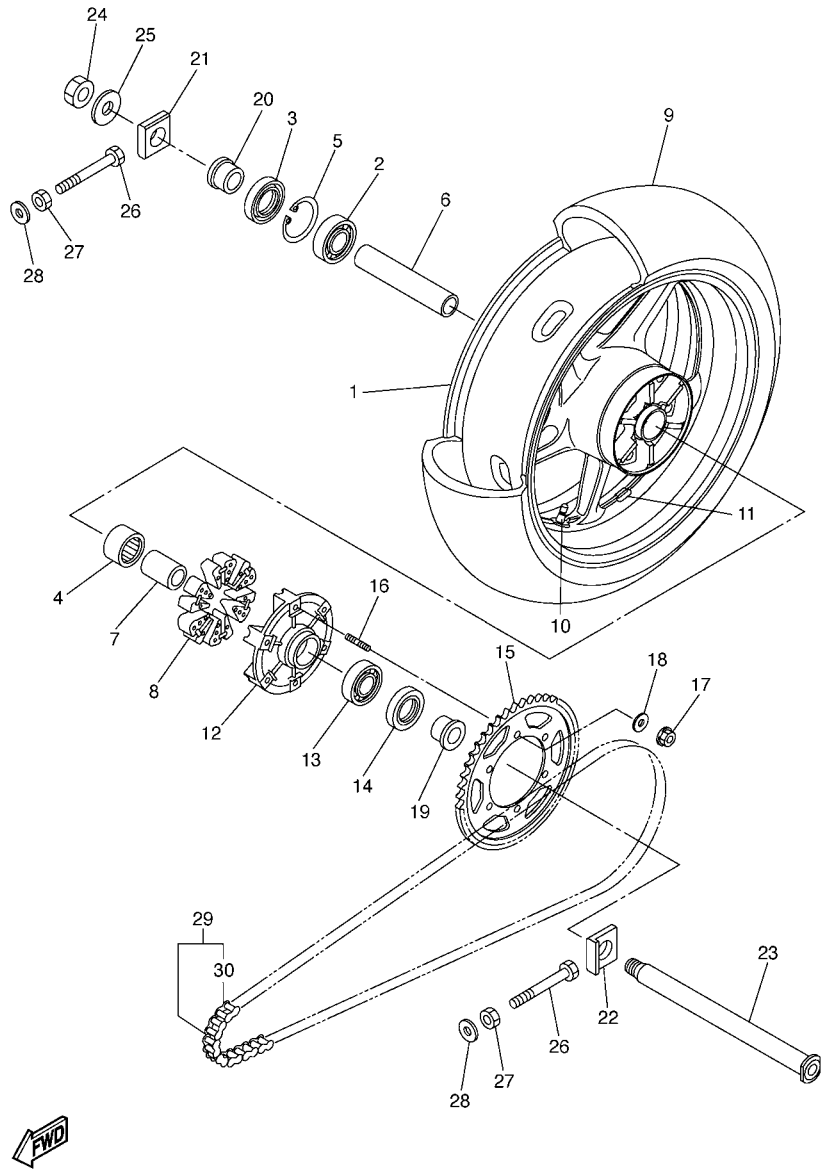

FIG. 32 RUEDA TRASERA

REF. Nº	CODIGO Nº	DESCRIPCION	2D1R					OBSERVACIONES
25	90201–25020	ARANDELA PLANA	1					
26	90101–08013	TORNILLO	2					
27	95302–08600	TUERCA	2					
28	90201–08057	ARANDELA PLANA	2					
29	94582–10122	CADENA (DID50VA8-122LL)	1					
30	94682–05031	.JUNTA, DE CADENA(DID50VA8-ZJ)	1					

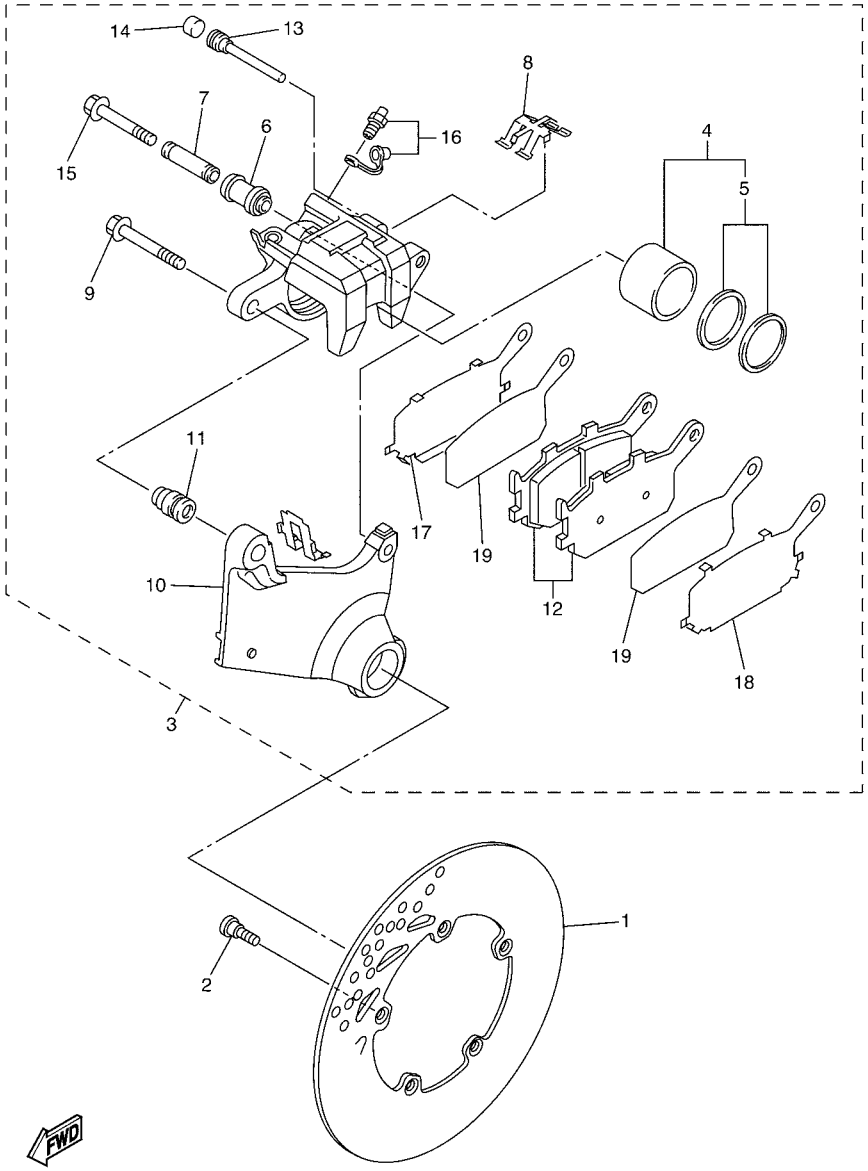

FIG. 33 CALIBRE FRENO TRASERA

REF. Nº	CODIGO Nº	DESCRIPCION	2D1R					OBSERVACIONES
1	2D1–2582W–00	DISCO DE FRENO TRASEROS 2	1					
2	90149–08009	TORNILLO DE REGLAJE	5					
3	2D1–2580W–00	CALIBRE COMPLETO TRASEROS 2	1					
4	5SL–W0057–00	.PISTON COMPLETO PINZA	1					
5	5SL–W0047–00	..JUEGO DE RETENES DE PINZA	1					
6	5SL–25917–00	.FUNDA DE CALIBRE	1					
7	5SL–25838–00	.CASQUILLO DE CALIBRE	1					
8	5SL–25919–00	.SOPORTE DE PASTILLAS	1					
9	5SL–25914–00	.PASADOR	1					
10	5VX–25921–50	.MENSULA DE SOPORTE	1					
11	3JD–25917–00	.FUNDA DE CALIBRE	1					
12	5VX–W0046–00	.JUEGO DE PASTILLAS DE FRENO 2	1					
13	8CR–25924–00	.PASADOR	1					
14	5DH–25916–00	.TAPON	1					
15	5SL–25926–00	.PERNO	1					
16	1UY–W0048–00	.CJTO TORNILLO DE PURGA	1					
17	5SL–25827–00	.CUNA DE CALIBRE	1					
18	5SL–25827–10	.CUNA DE CALIBRE	1					
19	5SL–25828–00	.CUNA DE CALIBRE	2					

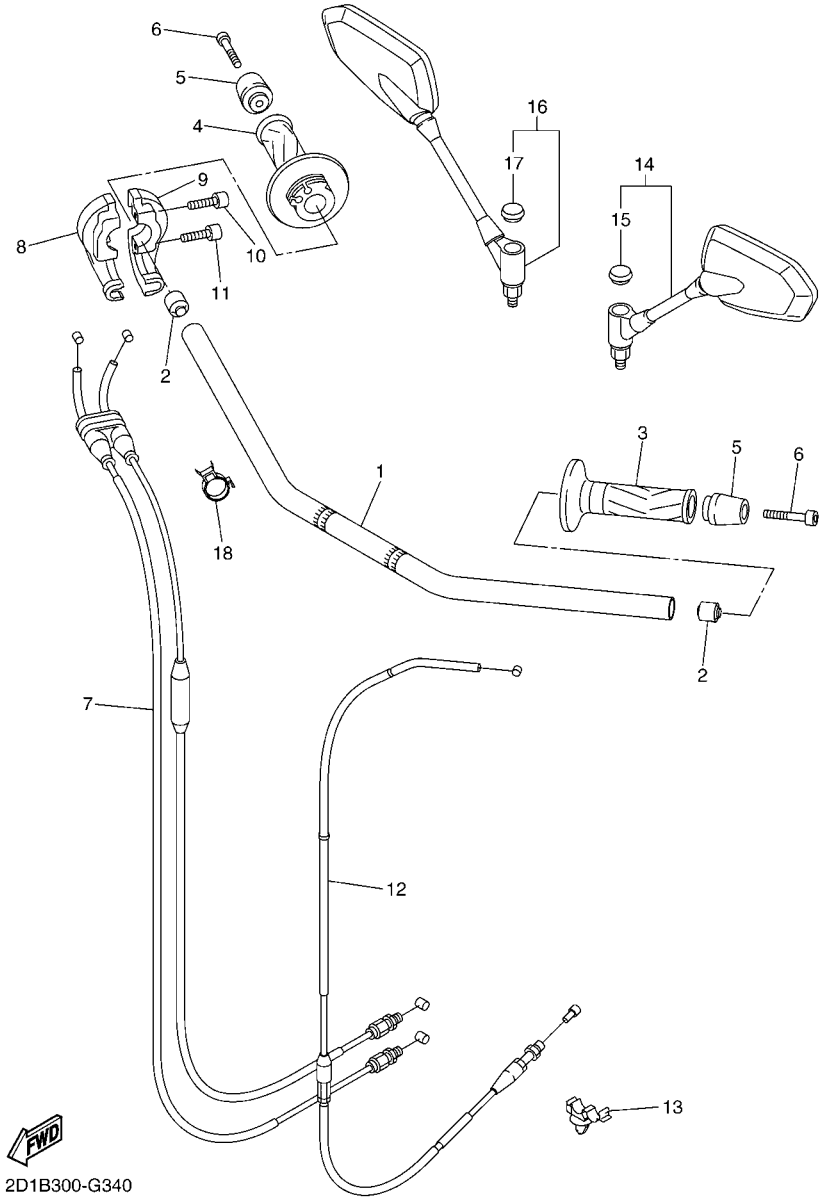

FIG. 34 MANILLAR & CABLE

REF. Nº	CODIGO Nº	DESCRIPCION	2D1R					OBSERVACIONES
1	2D1–26111–11	MANUBRIO	1					
2	4JH–23434–00	SOPORTE DE AMORTIGUADOR	2					
3	4YR–26241–02	EMPUNADURA (IZQUIERDO)	1					
4	4YR–26240–02	EMPUNADURA COMPLETA	1					
5	2D1–26246–00	EXTREMO DE EMPUNADURA	2					
6	91317–06050	PERNO	2					
7	2D1–26302–00	CABLE DE ACELERADOR COMPLETO	1					
8	3LN–26281–01	TAPA DE EMPUNADURA SUPERIOR	1					
9	4BP–26282–00	TAPA, EMPUNADURA PLATINA	1					
10	91317–05020	PERNO	1					
11	91317–05025	PERNO	1					
12	2D1–26335–00	CABLE DE EMBRAGUE	1					
13	90464–10008	BRIDA	1					
14	5YU–26280–30	ESPEJO COMPLETO (IZQUIERDO)	1					
15	5PS–26133–10	.TAPA	1					
16	5YU–26290–30	ESPEJO COMPLETO (DERECHO)	1					
17	5PS–26133–10	.TAPA	1					
18	90464–20191	BRIDA	1					

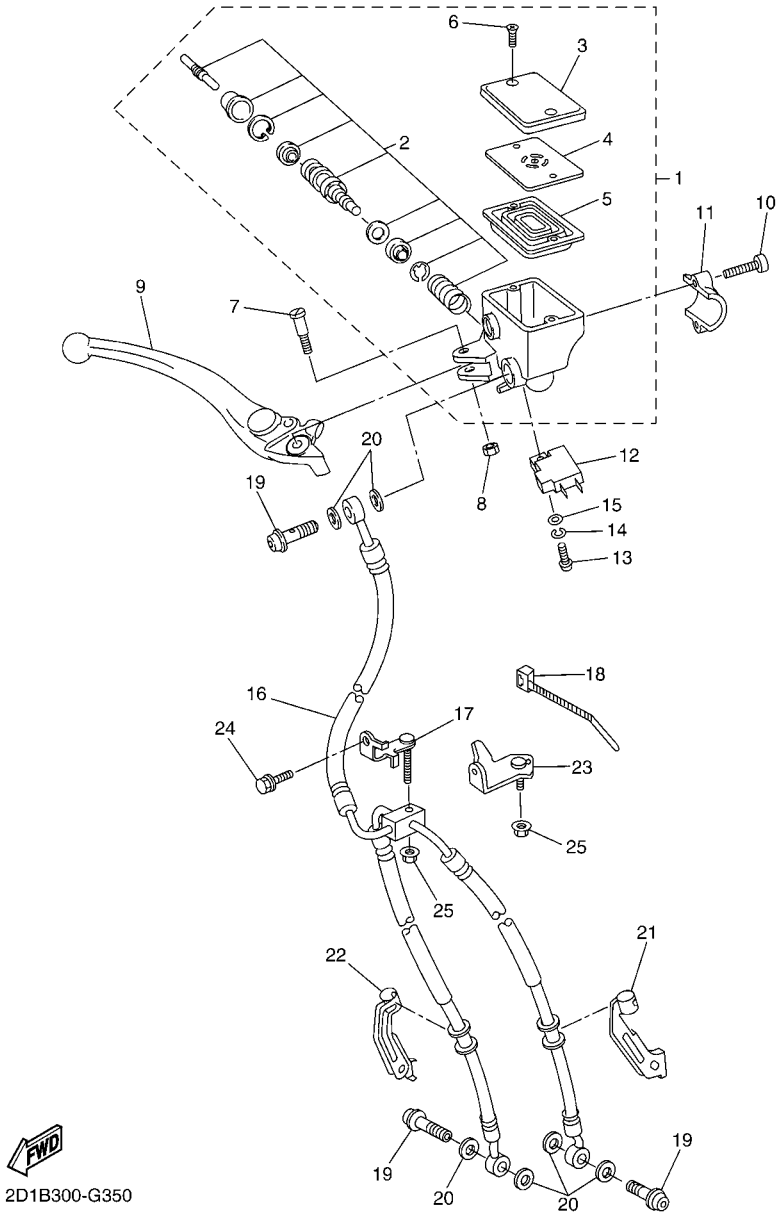

FIG. 35 CILINDRO MAESTRO DELANTERO

REF. Nº	CODIGO Nº	DESCRIPCION	2D1R					OBSERVACIONES
1	2D1–W2587–00	CILINDRO MAESTRO SUB COMPLET	1					
2	2D1–W0041–00	.JUEGO DE CILINDRO MAESTRO	1					
3	5VS–25852–00	.TAPA DE TANQUE DE RESERVA	1					
4	5VS–25855–00	.BUJE DE DIAFRAGMA	1					
5	20S–25854–00	.EMPAQUE,DIAFRAGMA	1					
6	5VS–2589H–00	.TORNILLO	2					
7	5VS–2589F–00	PERNO DE PALANCA	1					
8	95617–06100	TUERCAAUTOBLOCANTE	1					
9	5VS–83922–00	PALANCA 2	1					
10	5VS–26332–00	PERNO	2					
11	5VS–25867–00	SOPORTE DE CILINDRO MAESTRO	1					
12	4HM–83980–00	INTERRUP. DE PARADA DELANTERO	1					
13	98502–04012	TORNILLO	1					
14	92902–04100	ARANDELA	1					
15	92902–04600	ARANDELA	1					
16	2D1–25872–00	MANGUERA DE FRENO 1	1					
17	2D1–23857–00	SOPORTE	1					
18	90465–10098	BRIDA	1					
19	90401–10172	PERNO DE UNION	3					
20	90430–10005	JUNTA	6					
21	2D1–25875–00	SOPORTE DE MANGUERA FRENO 1	1					
22	2D1–25876–00	SOPORTE DE MANGUERA FRENO 2	1					
23	2D1–23377–00	SOPORTE DE BOCINA	1					
24	95812–06012	TORNILLO DE REBORDE	1					
25	95702–06500	TUERCA DE BRIDA	2					

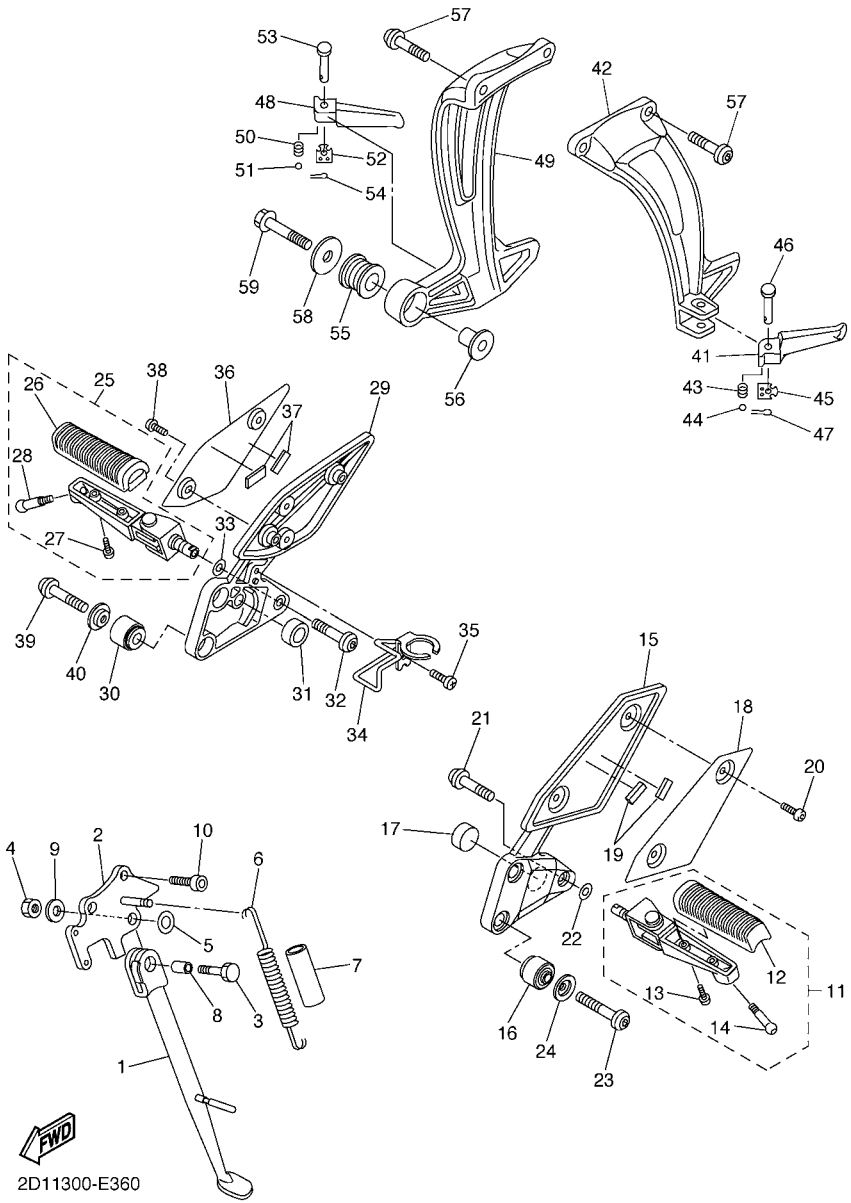

FIG. 36 SOPORTE & APOYAPIE

REF. Nº	CODIGO Nº	DESCRIPCION	2D1R					OBSERVACIONES
1	2D1–27311–00	PUNTAL LATERAL	1					
2	2D1–27321–00	SOPORTE DE PUNTAL LATERAL	1					
3	90101–10025	TORNILLO	1					
4	90185–10023	TUERCA AUTOBLOCANTE	1					
5	90201–16027	ARANDELA PLANA	1					
6	90506–18020	RESORTE DE TENSION	1					
7	90445–19002	TUBO (L60)	1					
8	90387–10050	ESPACIADOR	1					
9	90201–10035	ARANDELA PLANA	1					
10	90110–10028	TORNILLO ALLEN	2					
11	2D1–27410–00	APOYAPIE DELANTERO (MI)	1					
12	4BP–27413–00	.CUBIERTA DE APOYAPIE	1					
13	90157–05025	.TORNILLO CABEZA CONICA PLANA	2					
14	90109–08174	.PERNO	1					
15	2D1–27442–10	SOPORTE 2	1					
16	1NL–27424–00	AMORTIGUADOR DE APOYAPIE 2	2					
17	5VX–27114–00	TOPE DE PUNTAL PRINCIPAL	1					
18	2D1–27486–00	CUBIERTA 1	1					
19	1HX–27415–00	PLACA	2					
20	90111–05015	TORNILLO	2					
21	90111–10039	TORNILLO	1					
22	90206–17084	ARANDELA ONDULADA	1					
23	90110–08071	TORNILLO ALLEN	2					
24	90209–08295	ARANDELA DE SEPARACION	2					
25	2D1–27420–00	APOYAPIE DELANTERO (MD)	1					
26	4BP–27413–00	.CUBIERTA DE APOYAPIE	1					
27	90157–05025	.TORNILLO CABEZA CONICA PLANA	2					

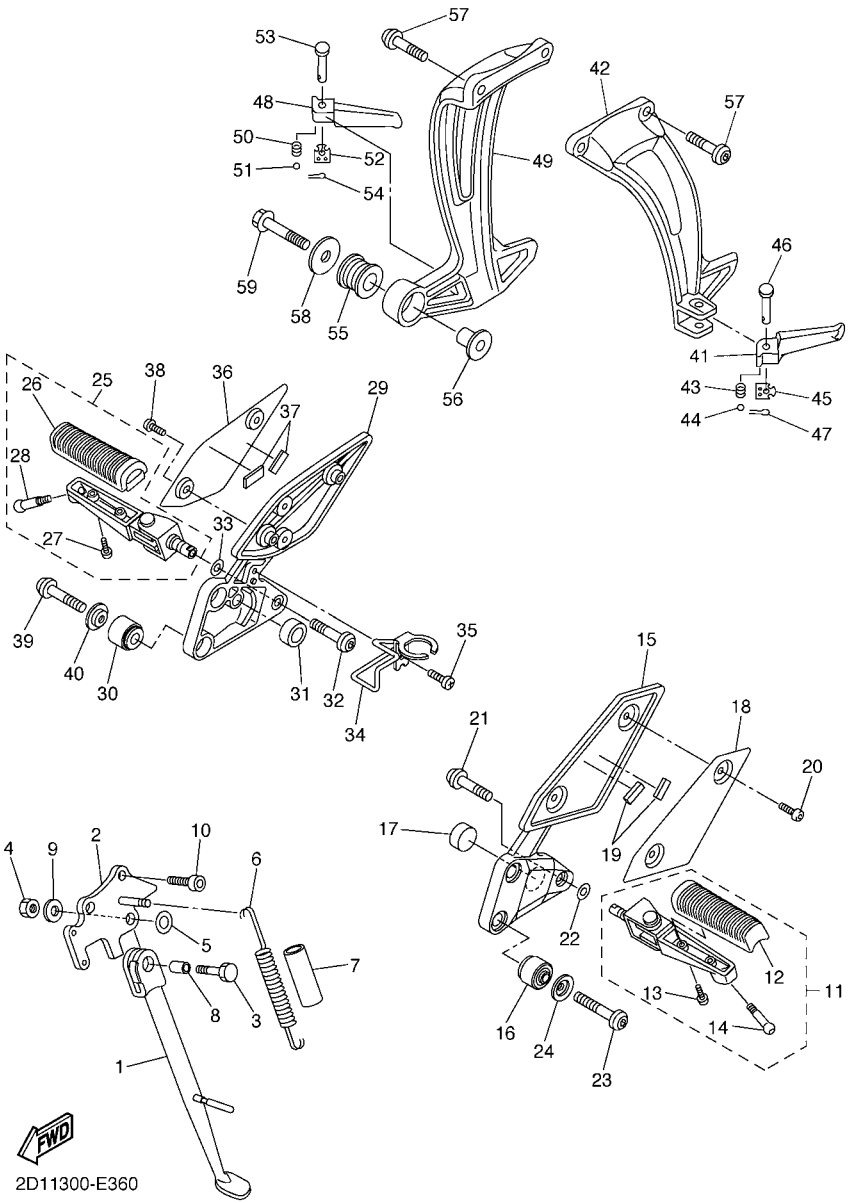

FIG. 36 SOPORTE & APOYAPIE

REF. Nº	CODIGO Nº	DESCRIPCION	2D1R					OBSERVACIONES
28	90109–08174	.PERNO	1					
29	2D1–27443–10	SOPORTE 3	1					
30	1NL–27424–00	AMORTIGUADOR DE APOYAPIE 2	2					
31	5VX–27114–00	TOPE DE PUNTAL PRINCIPAL	1					
32	90111–10039	TORNILLO	1					
33	90206–17084	ARANDELA ONDULADA	1					
34	2D1–2144G–00	SOPORTE DE INTERRUPTOR	1					
35	95802–06008	TORNILLO DE REBORDE	1					
36	2D1–27487–00	CUBIERTA 2	1					
37	1HX–27415–00	PLACA	2					
38	90111–05015	TORNILLO	2					
39	90110–08071	TORNILLO ALLEN	2					
40	90209–08295	ARANDELA DE SEPARACION	2					
41	3VR–27431–01	APOYAPIE POSTERIOR 1	1					
42	2D1–2741L–10	MENSULA 4	1					
43	90501–12743	RESORTE DE COMPRESION	1					
44	93501–04011	BOLA	1					
45	5VX–27437–00	ARANDELA ESPECIAL	1					
46	91702–08040	PASADOR DE ADRAZADERA	1					
47	91401–25015	CHAVETA	1					
48	3VR–27441–01	APOYAPIE POSTERIOR 2	1					
49	2D1–2742L–10	MENSULA 5	1					
50	90501–12743	RESORTE DE COMPRESION	1					
51	93501–04011	BOLA	1					
52	5VX–27437–00	ARANDELA ESPECIAL	1					
53	91702–08040	PASADOR DE ADRAZADERA	1					
54	91401–25015	CHAVETA	1					

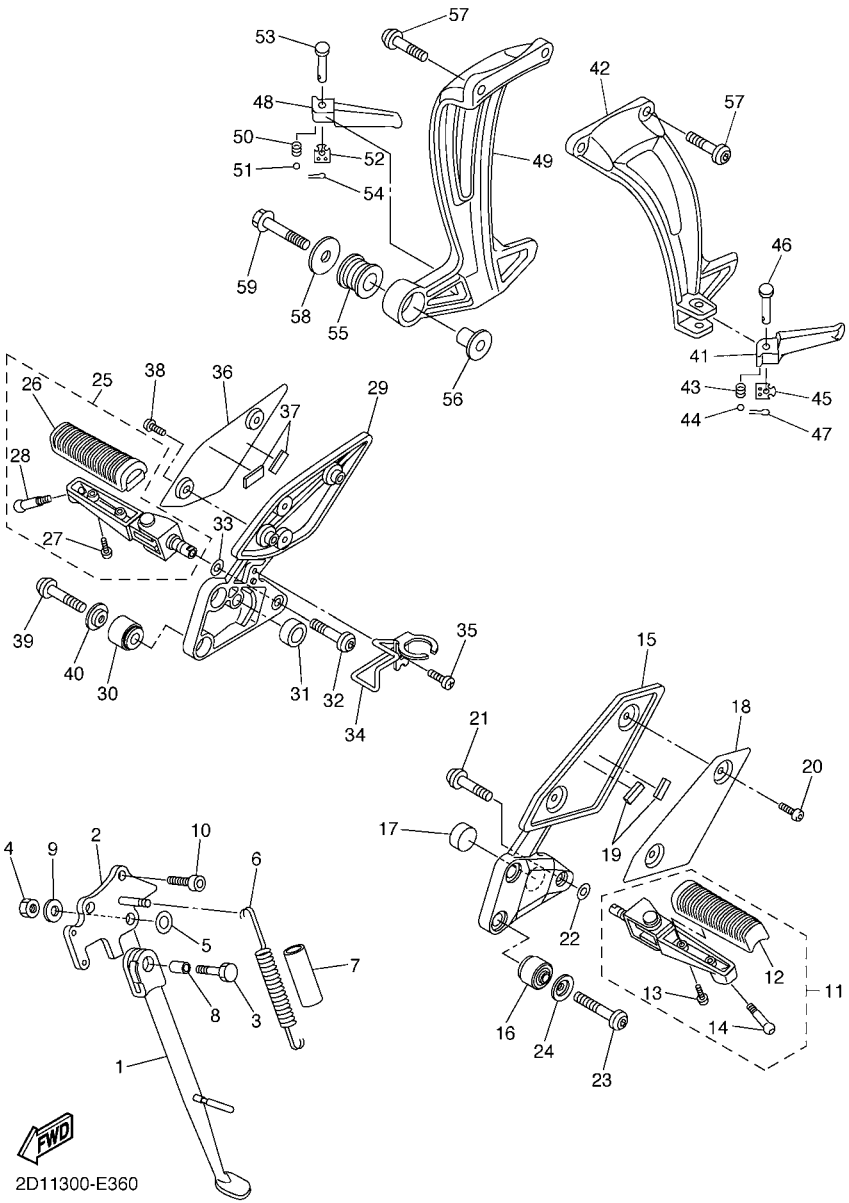

FIG. 36 SOPORTE & APOYAPIE

REF. Nº	CODIGO Nº	DESCRIPCION	2D1R					OBSERVACIONES
55	36Y–27424–01	AMORTIGUADOR DE APOYAPIE 2	1					
56	90387–10636	ESPACIADOR	1					
57	90109–085G6	PERNO	4					
58	90201–10669	ARANDELA PLANA	1					
59	95814–10040	TORNILLO	1					

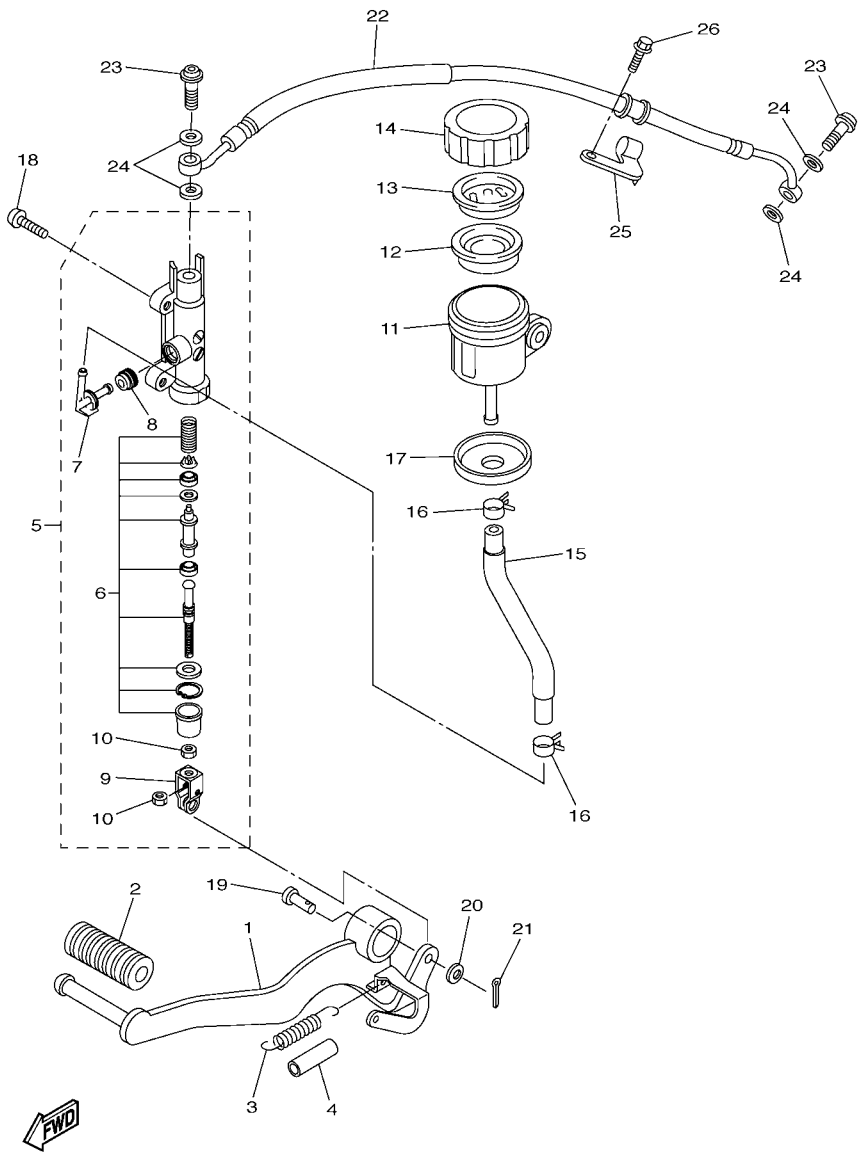

FIG. 37 CILINDRO MAESTRO TRASERO

REF. Nº	CODIGO Nº	DESCRIPCION	2D1R					OBSERVACIONES
1	2D1–27211–00	PEDAL DE FRENO	1					
2	5EB–18113–00	FUNDA DEL PEDAL DEL CAMBIO	1					
3	90506–20014	RESORTE DE TENSION	1					
4	90446–15386	TUBO RESEIRADERO	1					
5	2D1–2583V–00	CILINDRO, MAESTRO TRASERO	1					
6	5VX–W0042–50	.JUEGO DE CILINDRO MAESTRO	1					
7	2D1–2582A–00	.CONECTOR	1					
8	4BP–2585F–01	.ANILLO O	1					
9	4BP–27222–02	.UNION	1					
10	90170–08010	.TUERCA	2					
11	2D1–25894–00	TANQUE DE RESERVA	1					
12	5SL–25854–00	DIAFRAGMA TANQUE RESERVA	1					
13	5SL–25855–00	BUJE DE DIAFRAGMA	1					
14	5SL–25852–00	TAPA DE TANQUE DE RESERVA	1					
15	2D1–25895–00	MANGUERA DE TANQUE DE RESERVA	1					
16	90467–120A3	PRESILLA	2					
17	5D0–2583H–00	FUNDA	1					
18	92014–08020	PERNO	2					
19	90240–08005	PASADOR CON HOYO	1					
20	90201–08066	ARANDELA PLANA	1					
21	91401–20012	CHAVETA	1					
22	2D1–25874–00	MANGUERA DE FRENO	1					
23	90401–10172	PERNO DE UNION	2					
24	90430–10005	JUNTA	4					
25	2D1–25886–00	SOPORTE DE MANGUERA FRENO	1					
26	90119–05021	TORNILLO CON ARANDELA	1					

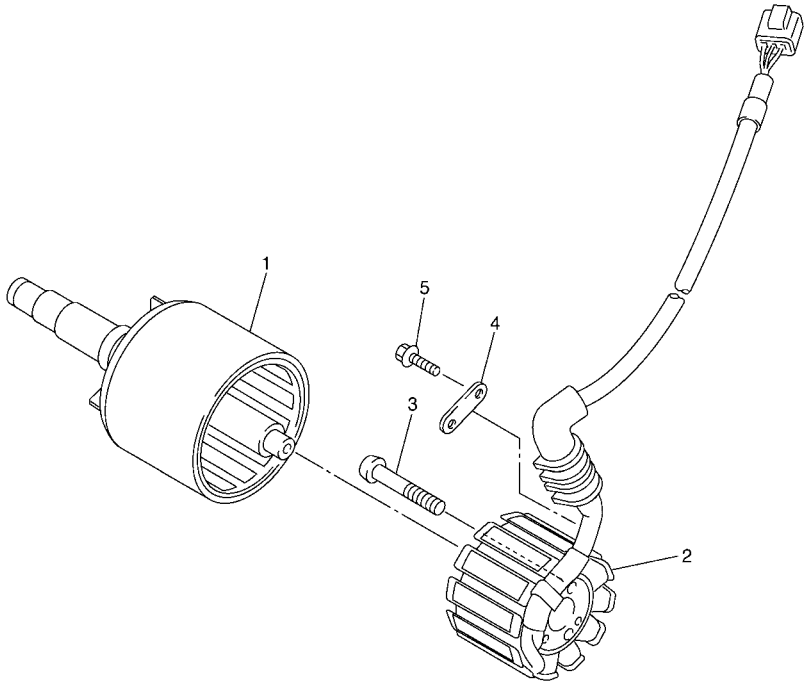

5VY1300-C400

FIG. 38 GENERADOR

REF. Nº	CODIGO Nº	DESCRIPCION	2D1R					OBSERVACIONES
1	5VY–81450–00	ROTOR COMPLETO	1					
2	2D1–81410–01	ESTATOR COMPLETO	1					
3	90149–06067	TORNILLO DE REGLAJE	3					
4	4C8–15191–00	PLACA	1					
5	90105–06078	TORNILLO	1					

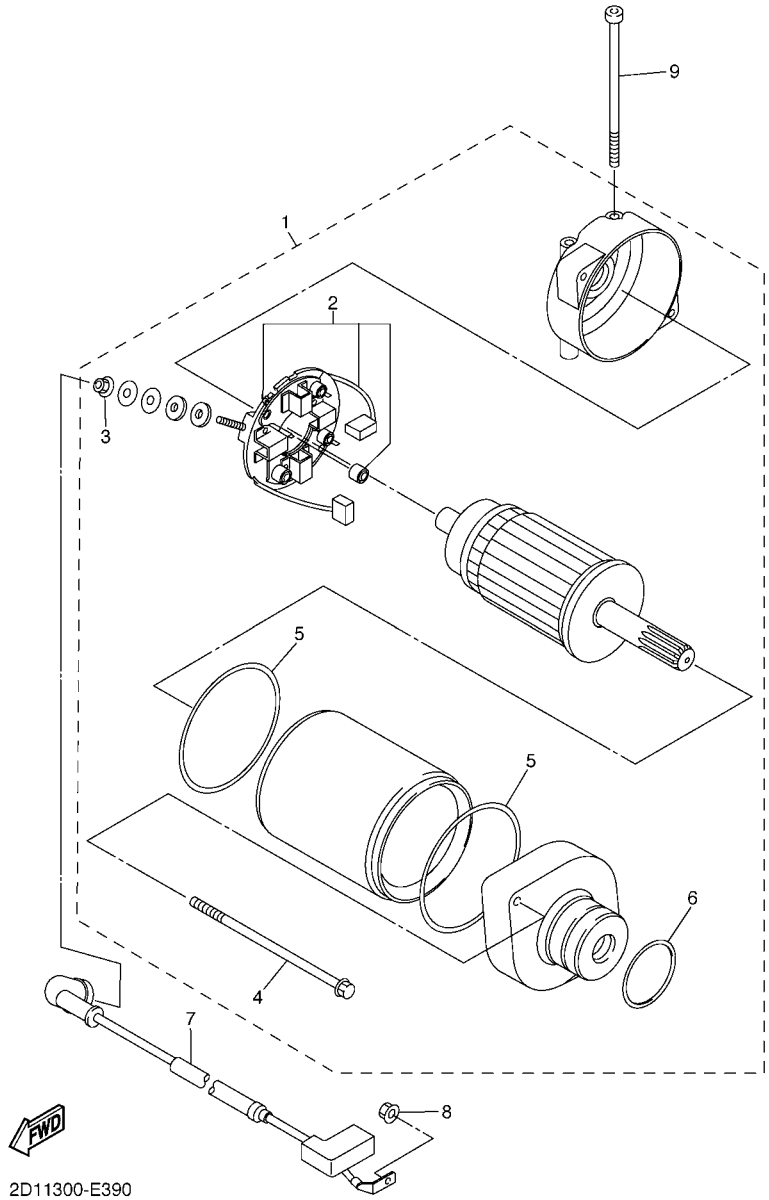

FIG. 39 MOTOR DE ARRANQUE

REF. Nº	CODIGO Nº	DESCRIPCION	2D1R					OBSERVACIONES
1	2D1–81890–00	MOTOR DE ARRANQUE COMPLETO	1					
2	3AJ–81801–00	.JUEGO DE ESCOBILLA	1					
3	4XV–8182A–00	.TUERCA	1					
4	2D1–81826–00	.PERNO	2					
5	11H–81844–00	.EMPAQUE	2					
6	1FK–81847–00	.ANILLO GOMA	1					
7	2D1–81815–00	CABLE, MOTOR DE ARRANQUE	1					
8	4XV–8182A–00	TUERCA	1					
9	91312–06080	TORNILLO	2					

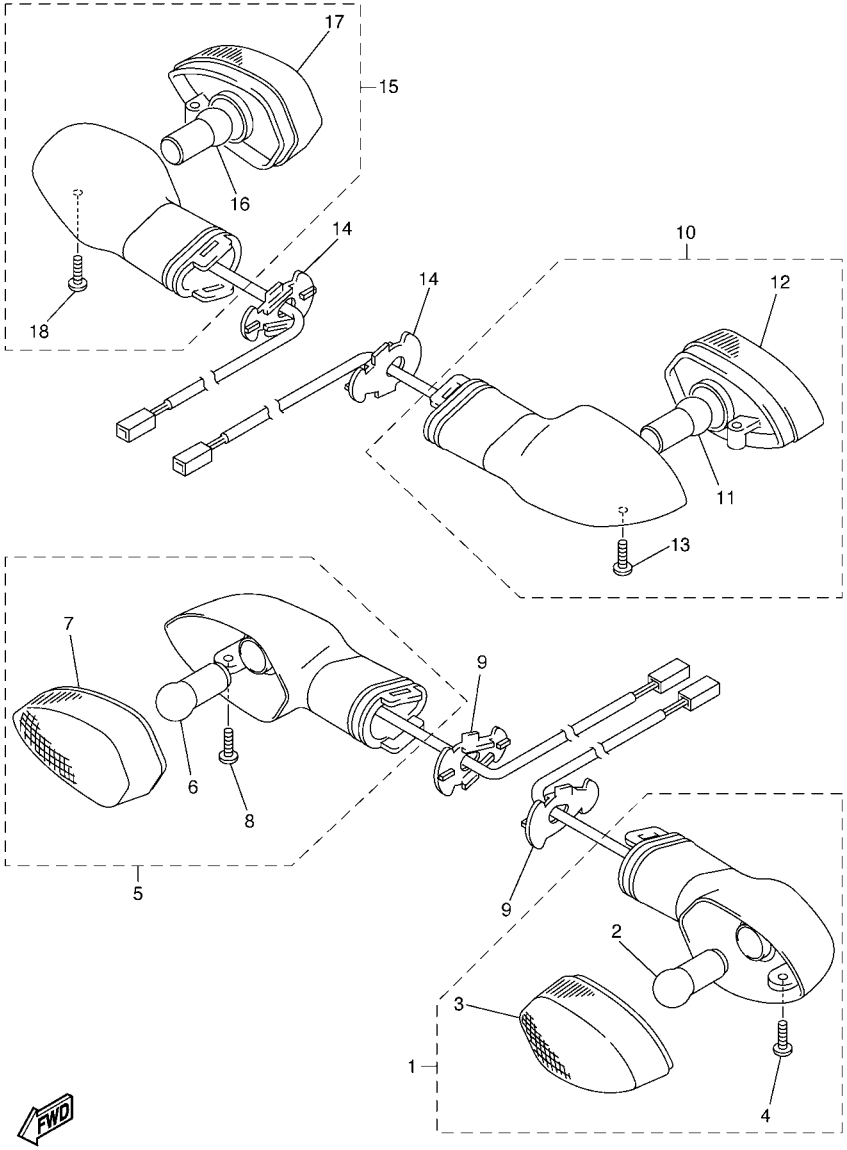

FIG. 40 LUZ DE DESTELLADOR

REF. Nº	CODIGO Nº	DESCRIPCION	2D1R					OBSERVACIONES
1	5PW–83310–01	DESTELLADOR DE LUZ DELANT.	1					
2	1KH–83311–00	.BOMBILLA (12V-10W)	1					
3	5PW–8333A–00	.LENTES COMPLETO 1	1					
4	97706–04012	.TORNILLO, ROSCA CHAPA	1					
5	5PW–83320–01	DESTELLADOR DE LUZ DELANT.	1					
6	1KH–83311–00	.BOMBILLA (12V-10W)	1					
7	5PW–8334A–00	.LENTES COMPLETO 2	1					
8	97706–04012	.TORNILLO, ROSCA CHAPA	1					
9	2D1–83318–00	SOPORTE DE DESTELLADOR 1	2					
10	2D1–83330–20	DESTELLADOR DE LUZ TRAS.COMPL.	1					
11	1KH–83311–00	.BOMBILLA (12V-10W)	1					
12	5PW–8334A–00	.LENTES COMPLETO 2	1					
13	97706–04012	.TORNILLO, ROSCA CHAPA	1					
14	2D1–83318–00	SOPORTE DE DESTELLADOR 1	2					
15	2D1–83340–20	DESTELLADOR DE LUZ TRAS.COMPL.	1					
16	1KH–83311–00	.BOMBILLA (12V-10W)	1					
17	5PW–8333A–00	.LENTES COMPLETO 1	1					
18	97706–04012	.TORNILLO, ROSCA CHAPA	1					

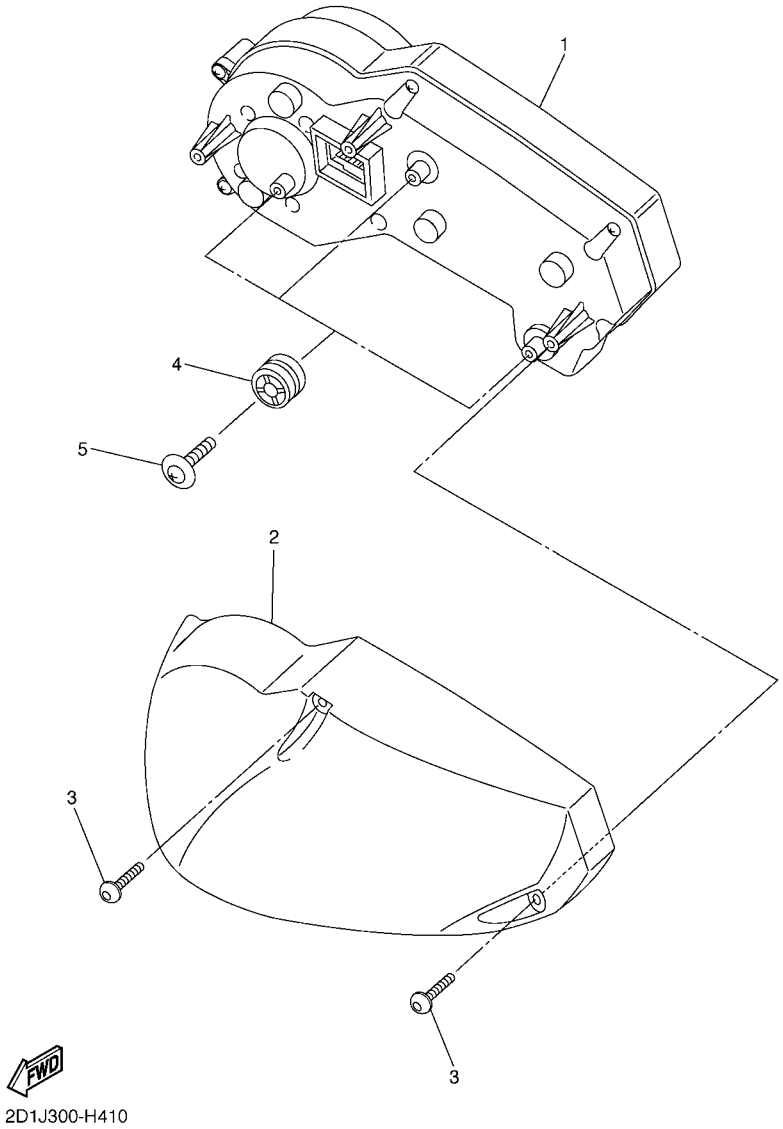

FIG. 41 MEDIDOR

REF. Nº	CODIGO Nº	DESCRIPCION	2D1R					OBSERVACIONES
1	2D1–83500–A0	VELOCIMETRO COMPLETO (KM/H)	1					
2	2D1–83559–00	CUBIERTA DE MEDIDOR	1					
3	90167–05076	TORNILLO DE ROSCA HEMBRA	3					
4	4XV–83513–00	AMORTIGUADOR	3					
5	90164–05001	TORNILLO ROSCA HEMBRA	3					

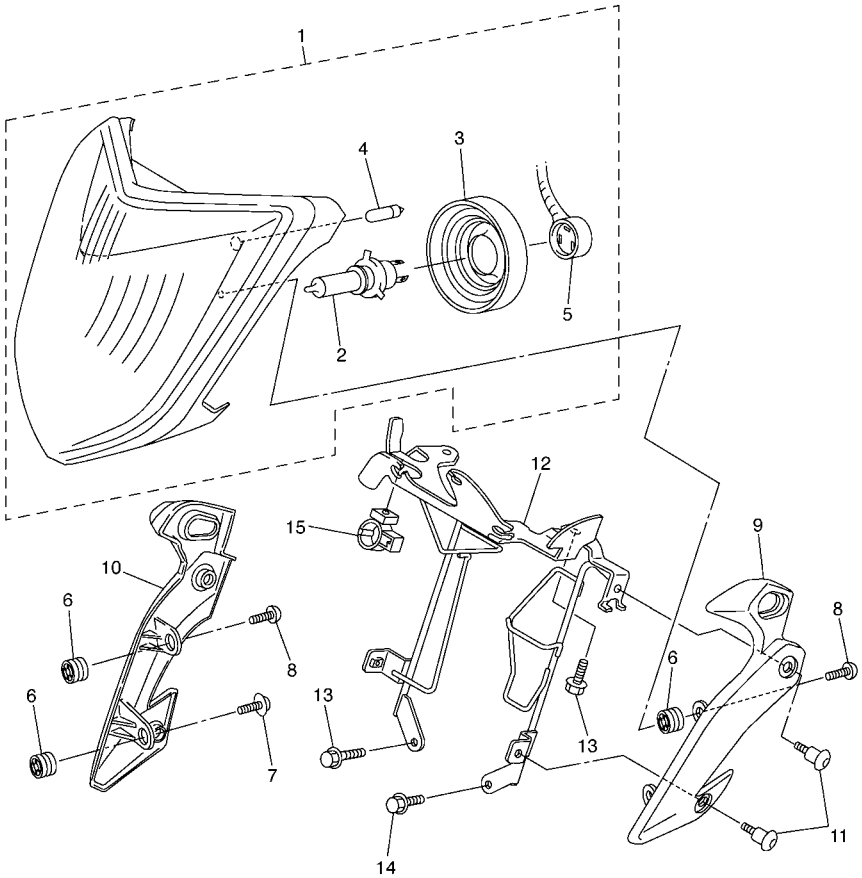

2D11300-E420

FIG. 42 FARO DELANTERO

REF. Nº	CODIGO Nº	DESCRIPCION	2D1R					OBSERVACIONES
1	2D1–84300–00	FARO DELANTERO COMPLETO	1					
2	4K0–84314–G0	.BOMBILLA (12V 60/55W HALOGEN)	1					
3	5JW–84397–00	.CUBIERTA DE ENCASTRE	1					
4	5DM–84347–00	.AMPOLLETA (12V-5W)	1					
5	2D1–84359–00	.CABLE DE FARO DELANTERO	1					
6	4XV–83513–00	AMORTIGUADOR	4					
7	90164–05001	TORNILLO ROSCA HEMBRA	2					
8	97702–50014	TORNILLO ROSCA HEMBRA	4					
9	2D1–23121–00–P0	CUBIERTA SUPERIOR 1	1					MBL2
10	2D1–23131–00–P0	CUBIERTA SUPERIOR 2	1					MBL2
11	90109–06078	PERNO	4					
12	2D1–283E0–00	SOPORTE COMPLETO ,1	1					
13	90105–06085	TORNILLO	3					
14	90105–06174	TORNILLO	1					
15	90464–15192	BRIDA	1					

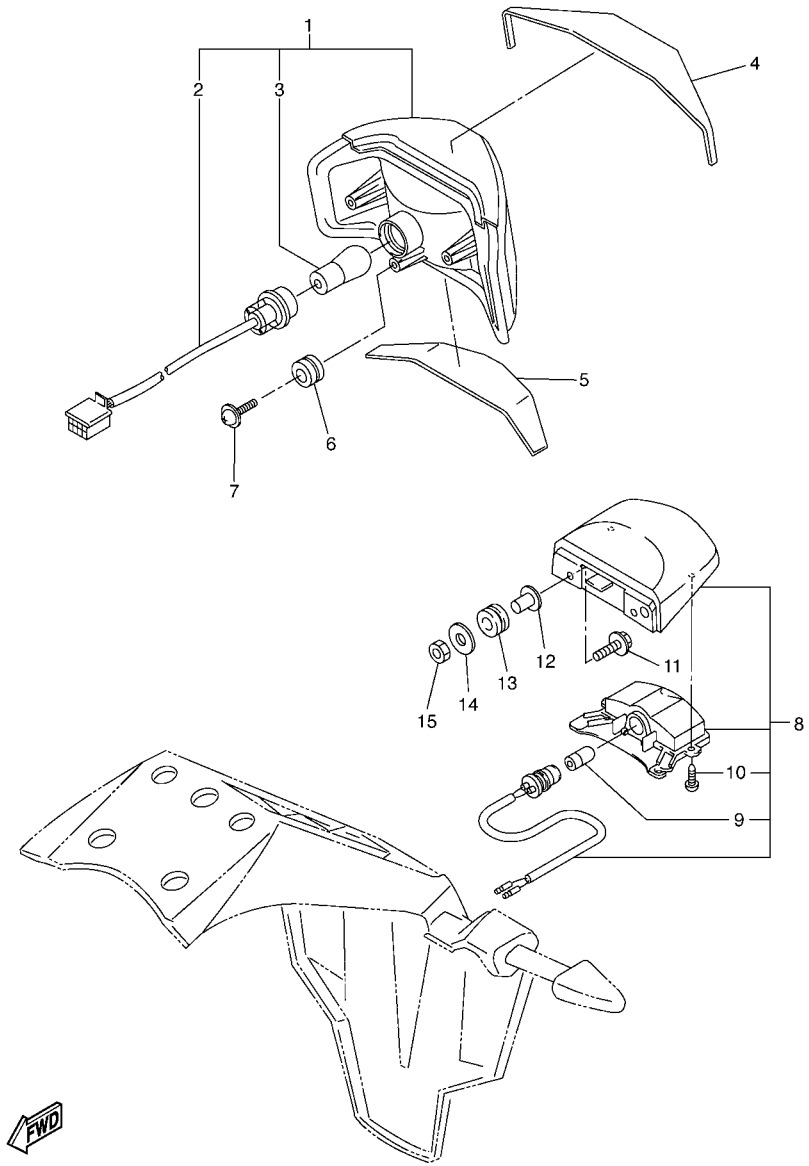

FIG. 43 LUZ DE COLA

REF. Nº	CODIGO Nº	DESCRIPCION	2D1R					OBSERVACIONES
1	2D1–84710–00	UNIDAD FARO TRASERO COMPL.	1					
2	2D1–84735–00	.CABLE COMPLETA	1					
3	1A2–84714–41	.AMPOLLETA (12V-21/5W)	1					
4	2D1–84736–00	AMORTIGUADOR DE COLA	1					
5	2D1–84737–00	AMORTIGUADOR, TRASERO 2	1					
6	90480–18276	TAPON	3					
7	90164–05001	TORNILLO ROSCA HEMBRA	3					
8	2D1–84745–00	UNIDAD DE LUZ DE LICENCIA COMP	1					
9	4HC–84744–00	.BOMBILLA (12V-5W)	1					
10	97706–04012	.TORNILLO, ROSCA CHAPA	2					
11	90159–05035	TORNILLO CON VALONA	2					
12	90387–05042	ESPACIADOR	2					
13	90480–11009	TAPON	2					
14	92902–05200	ARANDELA	2					
15	95602–05100	TUERCA AUTOBLOCANTE	2					

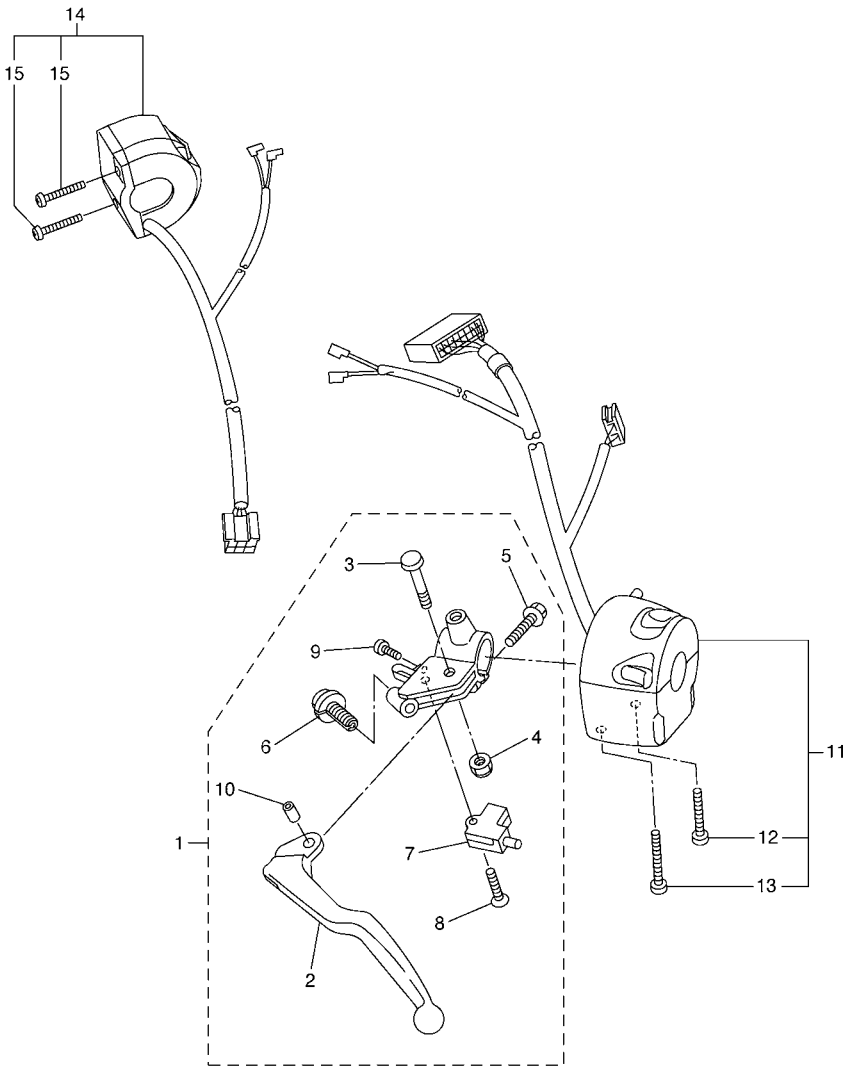

2D11300-E440

FIG. 44 INTERRUPTOR DE MANILLAR&PALANC

REF. Nº	CODIGO Nº	DESCRIPCION	2D1R					OBSERVACIONES
1	2D1–82910–00	SOPORTE DE LEVA COMPLT 1	1					
2	4XV–83912–11	.PALANCA 1	1					
3	4XV–83945–00	.PERNO DE PALANCA	1					
4	95607–06200	.TUERCA DE AUTO-CIERRE	1					
5	95027–06020	.PERNO, DE BRIDA	1					
6	5LV–83951–00	.PERNO DE CABLE DE AJUSTE	1					
7	3YX–82917–01	.INTERRUPTOR	1					
8	98704–03020	.TORNILLO DE CABEZA PLANA	1					
9	98507–04010	.TORNILLO DE CABEZA PLANA	1					
10	5JJ–83913–00	.COLLAR DE PALANCA 1	1					
11	2D1–83969–00	INTERRUPTOR DE MANIJA 5	1					
12	98507–05030	.TORNILLO DE CABEZA PLANA	1					
13	98507–05045	.TORNILLO DE CABEZA PLANA	1					
14	2D1–83975–00	INTERRUPTOR DE MANIJA 2	1					
15	98507–05022	.TORNILLO DE CABEZA PLANA	2					

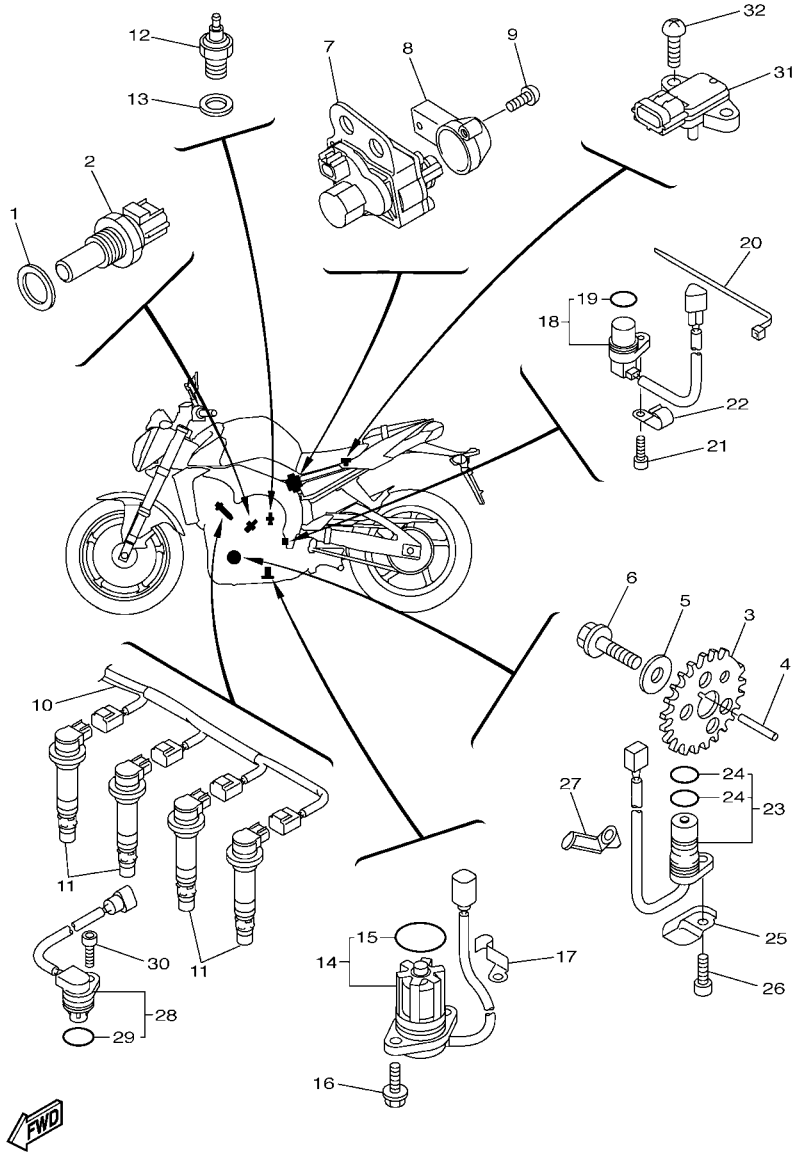

2D1J300-H450

FIG. 45 EQUIPO ELECTRICO 1

REF. Nº	CODIGO Nº	DESCRIPCION	2D1R					OBSERVACIONES
1	90201–12790	ARANDELA PLANA	1					
2	8CC–85790–01	TERMICA SENSORIO	1					
3	2D1–81673–00	ROTOR	1					
4	90282–03001	CHAVETA, RECTA	1					
5	90201–10039	ARANDELA PLANA	1					
6	90105–10290	TORNILLO	1					
7	2D1–85820–00	UNIDADDELSERVOMOTOR	1					
8	5VY–85829–00	CUBIERTA	1					
9	97702–50514	TORNILLO ROSCA HEMBRA	2					
10	2D1–82309–00	CABLE SUBCONDUCTOR	1					
11	5VY–82310–00	BOBINA DE ENCENDIDO COMPLETA	4					
12	3GB–82540–01	INTERRUPTOR NEUTRAL COMPL	1					
13	90430–10148	JUNTA	1					
14	5VY–85720–00	MEDIDOR DE NIVEL DE ACEITE	1					
15	5VY–8A8E0–00	.ANILLO O	1					
16	95022–06016	PERNO, DE BRIDA	2					
17	90465–08053	BRIDA	1					
18	4XV–83755–03	SENSOR DE VELOCIDAD	1					
19	4D9–81168–00	.ANILLO O	1					
20	90464–51001	BRIDA	1					
21	90110–06161	TORNILLO ALLEN	1					
22	90462–08057	BRIDA	1					
23	5VY–81670–01	RECOGEDOR COMPL.	1					
24	5VY–8A8E1–00	.ANILLO-O	2					
25	5VY–15589–02	PLACA	1					
26	90110–06161	TORNILLO ALLEN	1					
27	90465–08054	BRIDA	1					

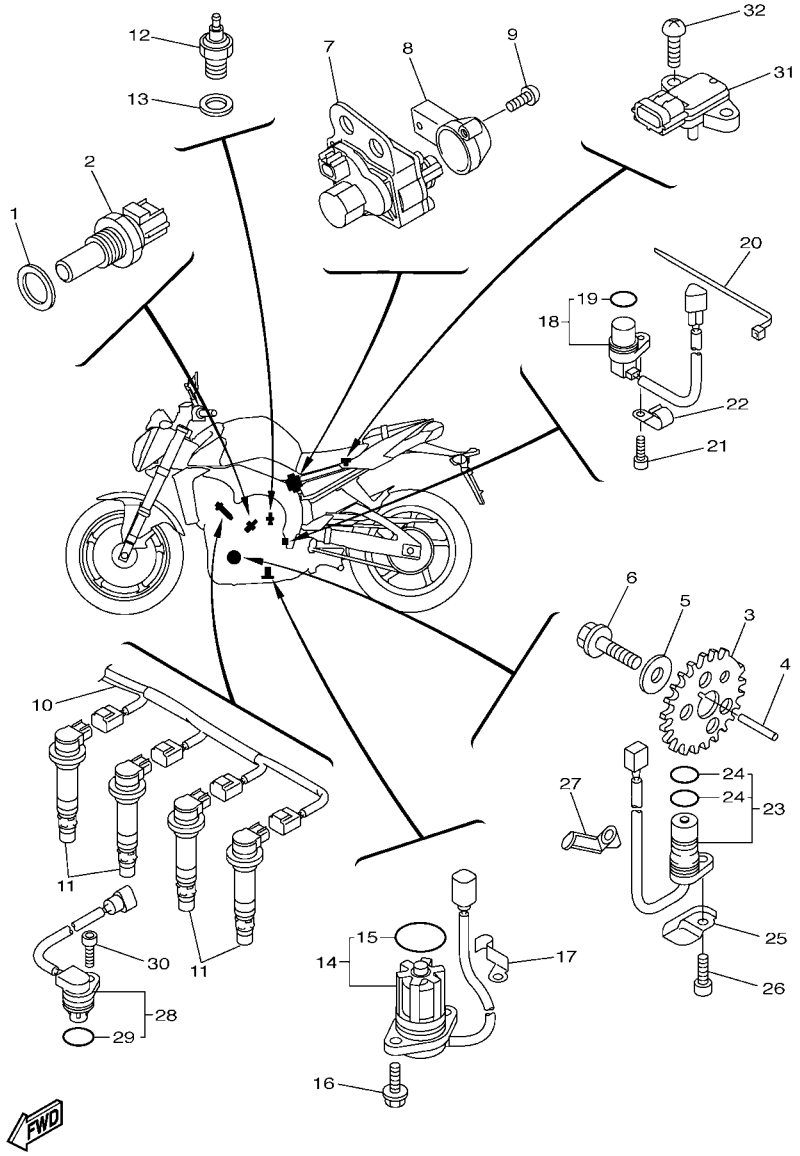

2D1J300-H450

FIG. 45 EQUIPO ELECTRICO 1

REF. Nº	CODIGO Nº	DESCRIPCION	2D1R					OBSERVACIONES
28	5VY–85896–00	SENSOR DE LEVA	1					
29	4D9–81168–00	.ANILLO O	1					
30	90110–06175	TORNILLO ALLEN	1					
31	2C0–82380–00	SENSOR DE PRESION	1					
32	97702–60520	TORNILLO ROSCA HEMBRA	1					

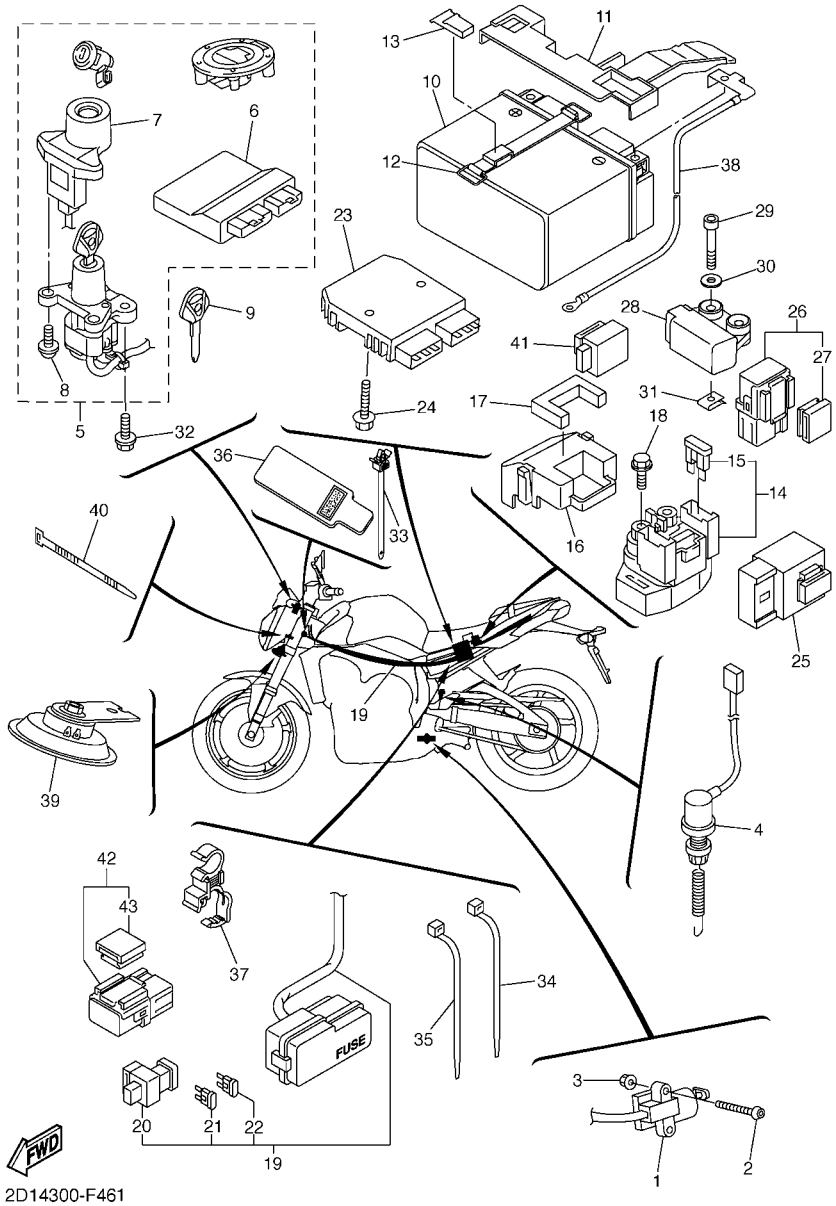

FIG. 46 EQUIPO ELECTRICO 2

REF. Nº	CODIGO Nº	DESCRIPCION	2D1R					OBSERVACIONES
1	5VS–82566–61	INTERRUPTOR	1					
2	92012–05030	PERNO	2					
3	95602–05200	TUERCA DE AUTO-CIERRE	2					
4	2D1–82530–00	INTERRUPTOR DE PARADA COMPLETO	1					
5	2D1–W8250–90	JUEGO DE INMOVILIZADOR	1					
6	2D1–8591A–90	.UNIDAD CONTROL	1					
7	2D1–8255P–00	.UNIDAD INMOVILIZADORA	1					
8	5SL–82113–01	.TORNILLO	2					
9	5SL–82511–08	BLANK KEY	1					AP
10	2D1–82100–00	BATERIA (GS YUASA YTZ14S)	1					
11	2D1–82129–00	CUBIERTA DE BATERIA	1					
12	2D1–82131–00	TIRANTE DE BATERIA	1					
13	5YU–2162A–00	GANCHO	1					
14	2C0–81940–00	CONJUNTO ARRANCADOR RELEVO	1					
15	36Y–82151–00	.FUSIBLE (15A-BL)	2					
16	5SL–82119–10	CUBIERTA DE CABLE CONDUCTOR	1					
17	2D1–82176–00	AMORTIGUADOR	1					
18	95022–06008	PERNO, DE BRIDA	2					
19	2D1–82590–00	CONJUNTO DE CABLES	1					
20	5JW–82151–10	.FUSIBLE (50A)	1					
21	5JJ–82151–10	.FUSIBLE (15A-BL)	3					
22	5JJ–82151–30	.FUSIBLE (10A-BL)	6					
23	1D7–81960–00	RECTIFICADOR Y REGULADOR	1					
24	95822–06025	TORNILLO DE REBORDE	2					
25	5VK–81950–40	RELE COMPLETO	1					
26	5JJ–81950–20	RELE COMPLETO	1					
27	5JJ–81952–00	.SOSTEN DE RELE	1					

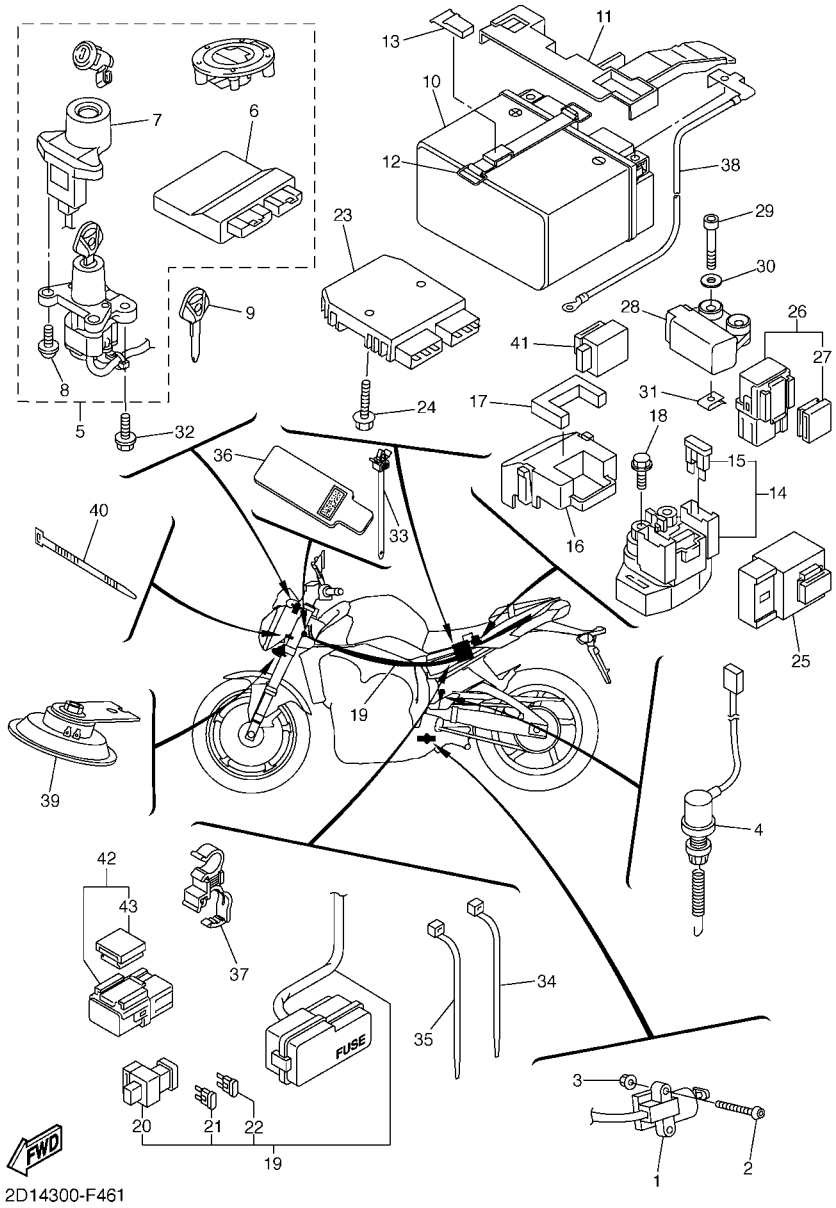

FIG. 46 EQUIPO ELECTRICO 2

REF. Nº	CODIGO Nº	DESCRIPCION	2D1R					OBSERVACIONES
28	5PS–82576–01	SENSOR ANGULO DE INCLINATION	1					
29	91312–04025	TORNILLO	2					
30	90201–04030	ARANDELA PLANA	2					
31	90183–04039	TUERCA DE RESORTE	2					
32	90109–08195	PERNO	2					
33	90464–12036	BRIDA	2					
34	1UA–82591–00	BANDA	2					
35	90464–13073	BRIDA	3					
36	2D1–82589–00	PROTECTOR DE ARNES DE CABLE	1					
37	90464–12012	BRIDA	1					
38	2D1–82116–00	CABLE CONDUCTOR NEGATIVO	1					
39	2D1–83371–00	BOCINA	1					
40	90465–10098	BRIDA	1					
41	4GY–83350–00	RELE DE DESTELLADOR COMPL.	1					
42	5JJ–81950–20	RELE COMPLETO	1					
43	5JJ–81952–00	.SOSTEN DE RELE	1					

INDICE NUMERICO

CODIGO Nº	REF. Nº
2D1–11026–00	1 – 28
5VY–11101–20	1 – 1
5VY–1111G–00	1 – 26
5VY–11133–10	1 – 2
5VY–11134–10	1 – 3
5VY–11165–00	15 – 30
2D1–11181–00	1 – 17
5VY–11191–02	1 – 18
5VY–11193–10	1 – 20
214–11198–01	9 – 7
5VY–11311–10	2 – 1
2D1–1133E–01	13 – 20
2D1–1133F–11	13 – 21
5VY–11351–00	2 – 2
2D1–11411–00	3 – 1
5VY–11416–00	3 – 6
5VY–11416–10	3 – 6
5VY–11416–20	3 – 6
5VY–11416–30	3 – 6
5VY–11416–A0	3 – 6
5VY–11445–00	16 – 8
5VY–11478–00	16 – 4
2D1–11537–00	16 – 1
5VY–11549–00	3 – 5
5VY–11603–01	3 – 8
5VY–11631–10	3 – 7
5VY–11633–00	3 – 10
14B–11650–00	3 – 2
5VY–11654–01	3 – 3
2D1–11656–00	3 – 4
2D1–11656–10	3 – 4
2D1–11656–20	3 – 4
2D1–11656–30	3 – 4
2D1–12111–00	4 – 1
2D1–12112–00	4 – 2
2D1–12113–00	4 – 6
2D1–12114–00	4 – 7
5NL–12116–00	4 – 4
1HX–12117–00	4 – 8
1WG–12117–00	4 – 9
1HX–12118–00	4 – 10
1WG–12118–00	4 – 11
4SV–12119–00	4 – 13
4TV–12119–00	4 – 12
5VY–12121–00	4 – 3
3GM–12126–00	4 – 5
3FV–12153–09	4 – 16
3LN–12153–09	4 – 15

CODIGO Nº	REF. Nº
3FV–12153–20	4 – 16
3LN–12153–20	4 – 15
3FV–12153–30	4 – 16
3LN–12153–30	4 – 15
1HX–12168–00	4 – 14
1HX–12168–20	4 – 14
1HX–12168–40	4 – 14
1HX–12168–60	4 – 14
1HX–12168–80	4 – 14
1HX–12168–A0	4 – 14
1HX–12168–F0	4 – 14
1HX–12168–H1	4 – 14
1HX–12168–K1	4 – 14
1HX–12168–M1	4 – 14
1HX–12168–R1	4 – 14
1HX–12168–U1	4 – 14
1HX–12168–W1	4 – 14
1HX–12168–Y1	4 – 14
1HX–12169–11	4 – 14
1HX–12169–31	4 – 14
1HX–12169–50	4 – 14
1HX–12169–70	4 – 14
1HX–12169–90	4 – 14
1HX–12169–E0	4 – 14
1HX–12169–G0	4 – 14
1HX–12169–J0	4 – 14
1HX–12169–L0	4 – 14
1HX–12169–N0	4 – 14
1HX–12169–T0	4 – 14
2D1–12170–00	5 – 1
14B–12176–00	5 – 3
2D1–12180–10	5 – 2
5VY–12210–20	5 – 6
2D1–12213–00	5 – 7
5BE–12241–00	1 – 19
5VY–12251–00	5 – 9
5VY–12252–01	5 – 10
5VY–12277–00	27 – 12
	27 – 28
2D1–12405–00	7 – 21
2D1–12405–10	7 – 22
2D1–1240J–00–P0	7 – 44
2D1–1240K–00–P0	7 – 45
2D1–12410–00	7 – 1
5LP–12411–00	7 – 2
4C8–12420–00	6 – 7
5VY–12422–00	6 – 14
4C8–12438–00	6 – 10

CODIGO Nº	REF. Nº
4XV–12439–00	6 – 12
5VY–1243A–00	7 – 15
2D1–1243E–01	7 – 19
5VY–1243F–01	7 – 9
5VY–12443–10	15 – 47
2D1–1244G–00	7 – 16
5VY–12450–11	6 – 11
5VY–12456–10	6 – 23
2D1–12461–00	7 – 25
22W–12462–00	7 – 26
2D1–12464–00	7 – 31
2D1–12467–00	7 – 42
5VY–12469–00	6 – 1
5GV–1246A–00	7 – 12
5VY–12481–11	6 – 29
2D1–12484–01	6 – 36
4XV–12485–00	6 – 27
5VY–12485–10	7 – 5
1AA–12535–00	7 – 23
2D1–12551–00	7 – 35
5VY–12576–00	6 – 2
2D1–12578–00	7 – 11
5VY–12579–00	7 – 6
5VY–12588–00	6 – 32
2D1–12589–00	7 – 38
2D1–12637–00	6 – 6
2D1–12675–00	7 – 24
5EB–12822–00	9 – 14
5VY–13117–10	8 – 5
2D1–13160–00	11 – 8
5VY–13161–00	9 – 11
5VY–1316E–00	8 – 10
5VY–13310–10	6 – 17
5VY–13336–00	6 – 19
5VY–13354–00	17 – 32
5VY–13355–00	6 – 21
2D1–13400–00	9 – 5
5VY–13410–00	8 – 2
4C8–13414–00	9 – 9
5VY–13416–00	8 – 7
5VY–13418–11	14 – 5
5GH–13440–20	9 – 2
5VY–13470–00	9 – 13
5JW–13473–00	9 – 16
5EB–13475–00	9 – 15
5VY–13490–00	9 – 3
5VY–13543–00	11 – 36
8FP–13556–00	11 – 32

CODIGO Nº	REF. Nº
5VY–13595–00	10 – 1
5VY–13596–00	10 – 3
5VY–13597–00	10 – 5
5VY–13598–00	10 – 7
2D1–13750–20	11 – 1
5VY–13761–00	11 – 30
5VY–13898–00	8 – 13
2D1–13907–02	28 – 12
2D1–13971–00	11 – 38
5PW–14103–00	11 – 29
5JW–14104–00	11 – 33
4KM–14137–00	11 – 9
5PS–14147–00	11 – 31
5VY–14171–00	11 – 15
5VY–14204–00	11 – 16
8CC–14216–10	11 – 28
3XV–14251–00	11 – 13
5PW–14251–00	11 – 24
5PW–14349–00	11 – 22
5SL–14349–00	11 – 27
5FL–14349–10	11 – 19
5JW–14396–00	11 – 12
2D1–14409–00	10 – 21
2D1–1440B–00	10 – 22
2D1–14411–00	10 – 9
2D1–14413–01	11 – 39
2D1–14421–00	10 – 10
2D1–14451–00	10 – 11
2D1–14452–00	10 – 12
5VY–14457–00	10 – 14
2D1–14462–00	10 – 13
2D1–14498–00	10 – 17
5JW–14589–00	11 – 26
2D1–14602–10	13 – 1
4FM–14613–00	13 – 3
2D1–14703–10	13 – 6
2D1–14718–20	13 – 9
5JW–14723–00	12 – 7
2D1–14737–00	13 – 17
5VY–14755–00	13 – 7
2D1–14799–10	13 – 10
2D1–14826–00	13 – 18
5VY–1482K–00	1 – 21
2D1–14840–00	12 – 1
5VY–14881–00	12 – 2
5VY–14882–00	12 – 3
5VY–14883–00	12 – 5
5SL–14890–10	1 – 22

CODIGO Nº	REF. Nº
5VY–14899–00	1 – 23
5VY–14905–00	11 – 34
5DM–14936–00	11 – 25
22U–14952–00	11 – 5
5PS–14987–00	11 – 23
4C8–15100–00	14 – 1
4B1–15113–00	15 – 33
5EB–15155–00	14 – 2
5VY–15163–00	18 – 10
5VY–15164–00	15 – 4
36Y–15189–00	15 – 42
4H7–15189–00	15 – 44
5PX–15189–00	15 – 8
4C8–15191–00	38 – 4
5VY–15316–00	14 – 20
5PW–15361–00	14 – 19
3F9–15362–10	15 – 17
2D1–15393–00	10 – 19
5VY–15411–00	15 – 1
2D1–15413–00	15 – 36
2D1–15416–00	15 – 23
2D1–15418–00	15 – 14
2D1–15421–00	15 – 16
5VY–15431–00	15 – 39
2D1–15441–01	15 – 32
2D1–15451–10	15 – 10
4C8–15456–00	15 – 28
4C8–15461–00	15 – 19
4C8–15462–00	15 – 37
5VY–15515–00	16 – 7
5VY–15517–00	16 – 12
5VY–15521–00	16 – 13
5VY–15542–00	15 – 5
5VY–15570–00	16 – 5
5VY–15586–00	16 – 6
5VY–15589–02	45 – 25
5VY–16150–00	17 – 7
5VY–16154–00	17 – 8
5VY–16155–00	16 – 2
5VY–16164–00	17 – 30
5VY–16181–00	17 – 31
5VY–16321–00	17 – 15
5VY–16325–00	17 – 13
	17 – 16
5VY–16330–00	17 – 17
5VY–16331–00	17 – 12
5VY–16340–00	17 – 26
132–16346–00	20 – 2

CODIGO Nº	REF. Nº
5VY–16351–00	17 – 18
4XV–16356–01	17 – 25
2D1–16370–00	17 – 9
2D1–16382–00	17 – 1
5VY–16383–00	17 – 11
5VY–16384–00	17 – 10
4X7–16385–00	17 – 14
2D1–17121–10	18 – 9
2D1–17131–00	18 – 6
2D1–17151–00	18 – 3
2D1–17161–00	18 – 8
5VY–17211–00	18 – 32
2D1–17221–00	18 – 21
5VY–17231–00	18 – 29
5VY–17241–00	18 – 26
2D1–17251–01	18 – 30
2D1–17261–00	18 – 24
5VY–17402–00	18 – 17
5VY–17411–00	18 – 1
5VY–17442–00	18 – 19
5VY–17446–00	18 – 15
3CV–17460–00	18 – 35
2D1–18101–00	20 – 10
2D1–18110–00	20 – 15
2D1–18112–00	20 – 13
5EB–18113–00	20 – 16
	37 – 2
2D1–18115–00	20 – 17
5VX–18116–00	20 – 20
5VY–18127–10	20 – 5
5VY–18140–00	20 – 3
5VY–18144–00	20 – 1
5VX–18154–00	20 – 21
2D1–18511–00	19 – 4
2D1–18512–00	19 – 5
5VY–18513–01	19 – 6
5VY–18531–00	19 – 7
5VY–18535–00	19 – 8
5VY–18536–00	19 – 10
5VY–18540–00	19 – 1
136–18542–00	19 – 2
5VY–18562–00	19 – 11
2D1–21110–01–P0	21 – 1
2D1–2117E–00	22 – 24
2D1–2117G–00	21 – 18
4XV–2117K–00	29 – 22
2D1–2117N–00	21 – 13
2D1–21190–00–P0	21 – 2

INDICE NUMERICO

CODIGO Nº	REF. Nº
2D1–21261–00	22 – 38
2D1–21268–10	21 – 36
2D1–21287–01	21 – 26
2D1–21341–01	29 – 6
2D1–21345–00	21 – 23
3YX–21376–00	21 – 20
4XV–21376–00	22 – 14
2D1–21399–00	21 – 14
2D1–2139U–00	7 – 32
2D1–2144G–00	36 – 34
4C8–21495–00	21 – 9
	21 – 12
5PW–21511–00–P6	22 – 1
5PW–21511–00–PB	22 – 1
1CA–21568–00	28 – 43
2D1–21575–00	21 – 35
2D1–21611–00	22 – 41
2D1–21629–00	22 – 29
5YU–2162A–00	46 – 13
2D1–21639–00	22 – 42
5YU–21639–00	21 – 27
2D1–2163A–00	22 – 20
2D1–2163G–F0	22 – 45
2D1–2163G–G0	22 – 45
2D1–21646–00	22 – 15
2D1–21650–00	24 – 38
2D1–21651–00–P0	22 – 17
2D1–21651–00–P5	22 – 17
14B–21668–00	24 – 42
2D1–21669–00	22 – 26
2D1–21688–00	22 – 30
2D1–216A2–00	22 – 10
2D1–216A3–00	22 – 11
2D1–21711–00	23 – 1
2D1–21719–00	23 – 5
2D1–2171A–00–P0	28 – 23
2D1–2171A–00–P5	28 – 23
2D1–21721–00	23 – 2
5PW–2174X–00	22 – 18
2D1–2174Y–00	21 – 15
26H–21828–00	23 – 8
2D1–21871–00	23 – 6
5VY–21875–00	23 – 7
2D1–2197E–00	21 – 37
2D1–22110–11	24 – 1
2D1–22117–00	24 – 22
5JJ–22128–00	24 – 5
2D1–22141–00	24 – 35

CODIGO Nº	REF. Nº
2D1–22151–00	24 – 9
2D1–2217A–10	24 – 23
2D1–2217M–00	24 – 24
2D1–22184–00	24 – 2
2D1–22210–41	25 – 1
2D1–22210–51	25 – 1
5SL–22311–00	24 – 13
2D1–23102–01	27 – 1
2D1–23103–01	27 – 17
2D1–23110–00	27 – 7
2D1–23111–00	27 – 15
	27 – 31
5VY–23118–00	27 – 13
	27 – 29
2D1–23120–00	27 – 23
2D1–23121–00–P0	42 – 9
4KM–23123–01	27 – 36
2D1–23131–00–P0	42 – 10
2D1–23136–00	27 – 2
	27 – 18
2D1–23141–00	27 – 11
	27 – 27
4PU–23144–00	27 – 6
	27 – 22
4PU–23145–01	27 – 4
	27 – 20
5PW–23146–00	27 – 3
	27 – 19
3XJ–23147–L0	27 – 16
	27 – 32
4V4–23153–L0	27 – 5
	27 – 21
509–23158–L0	27 – 9
	27 – 25
2D1–23170–01	27 – 24
2D1–23170–11	27 – 8
3D8–23181–00	27 – 10
	27 – 26
2D1–23340–00	27 – 34
3LC–23357–00	27 – 14
	27 – 30
2D1–23377–00	35 – 23
2D1–23405–00	26 – 10
4XV–23415–01	26 – 4
4XV–23418–00	26 – 7
4XV–2341B–00	26 – 13
4PX–23426–00	21 – 34
3VD–23434–00	26 – 12

CODIGO Nº	REF. Nº
4JH–23434–00	34 – 2
2D1–23441–00	26 – 14
2D1–23442–00	26 – 17
5YU–23445–00	26 – 21
3FV–23462–00	26 – 2
2D1–23857–00	35 – 17
2D1–24106–00	28 – 36
2D1–24108–00	28 – 37
2D1–24129–00	21 – 31
2D1–2412G–00	28 – 3
2D1–24139–00	21 – 32
5SL–2413B–00	28 – 42
2D1–2414H–00	28 – 39
2D1–2414K–00	28 – 38
2D1–2414N–00	28 – 35
2D1–2414P–00	28 – 40
2D1–2414R–00	28 – 41
2D1–24181–00	28 – 28
3MA–24181–00	13 – 13
5VX–24181–00	28 – 6
5VY–24181–00	28 – 2
2D1–24182–00	22 – 12
2D1–24183–00	21 – 25
2D1–24184–00	21 – 21
2D1–24185–00	21 – 22
2D1–24192–00	28 – 14
2D1–24317–10	28 – 20
68V–24376–00	11 – 11
5JW–24486–00	28 – 18
2D1–24491–00	28 – 13
5JJ–24602–00	28 – 9
2D1–24665–00	29 – 24
2D1–24710–00	29 – 1
2D1–24711–00	29 – 2
4HM–24728–00	29 – 3
22W–24741–00	22 – 39
3C3–24741–00	29 – 9
2D1–24747–00	22 – 19
2D1–24750–00	29 – 16
2D1–2476U–00	29 – 7
2D1–2476V–00	29 – 8
4BP–24780–00	29 – 17
2D1–24780–02	29 – 11
2D1–24785–00	29 – 10
2D1–2478E–00	29 – 20
4BP–24792–00	29 – 12
	29 – 18
4XV–25117–00	30 – 2

CODIGO Nº	REF. Nº
5VY–25168–00–0X	30 – 1
5VY–25168–00–98	30 – 1
4XV–25181–10	30 – 9
5PW–25317–00	32 – 6
5VY–25338–00–0X	32 – 1
5VY–25338–00–98	32 – 1
5VX–25364–00	32 – 8
2D1–25366–00	32 – 12
2D1–25377–00	32 – 7
2D1–25381–00	32 – 23
2D1–25383–00	32 – 20
5VY–25388–00	32 – 21
5VY–25389–01	32 – 22
5MT–25398–00	30 – 7
	32 – 11
5MT–25398–10	30 – 7
	32 – 11
5MT–25398–20	30 – 7
	32 – 11
2D1–25445–20	32 – 15
2D1–2580T–00	31 – 3
2D1–2580U–00	31 – 13
2D1–2580W–00	33 – 3
5D0–2581T–00	31 – 1
5SL–25827–00	33 – 17
5SL–25827–10	33 – 18
5SL–25828–00	33 – 19
2D1–2582A–00	37 – 7
2D1–2582W–00	33 – 1
5SL–25838–00	33 – 7
5D0–2583H–00	37 – 17
2D1–2583V–00	37 – 5
5SL–25852–00	37 – 14
5VS–25852–00	35 – 3
20S–25854–00	35 – 5
5SL–25854–00	37 – 12
5SL–25855–00	37 – 13
5VS–25855–00	35 – 4
4BP–2585F–01	37 – 8
5VS–25867–00	35 – 11
2D1–25872–00	35 – 16
2D1–25874–00	37 – 22
2D1–25875–00	35 – 21
2D1–25876–00	35 – 22
2D1–25886–00	37 – 25
2D1–25887–00	24 – 19
2D1–25894–00	37 – 11
2D1–25895–00	37 – 15

CODIGO Nº	REF. Nº
5VS–2589F–00	35 – 7
5VS–2589H–00	35 – 6
5SL–25914–00	33 – 9
5DH–25916–00	33 – 14
3JD–25917–00	33 – 11
5SL–25917–00	33 – 6
4SV–25919–00	31 – 9
	31 – 19
5SL–25919–00	33 – 8
5VX–25921–50	33 – 10
4SV–25924–00	31 – 10
	31 – 20
8CR–25924–00	33 – 13
3GM–25925–00	31 – 11
	31 – 21
5SL–25926–00	33 – 15
2D1–26111–11	34 – 1
5PS–26133–10	34 – 15
	34 – 17
4YR–26240–02	34 – 4
4YR–26241–02	34 – 3
2D1–26246–00	34 – 5
5YU–26280–30	34 – 14
3LN–26281–01	34 – 8
4BP–26282–00	34 – 9
5YU–26290–30	34 – 16
2D1–26302–00	34 – 7
5VS–26332–00	35 – 10
2D1–26335–00	34 – 12
278–27114–00	29 – 5
5VX–27114–00	36 – 17
	36 – 31
3C3–27151–01	21 – 42
2D1–27211–00	37 – 1
4BP–27222–02	37 – 9
2D1–27267–00	21 – 40
2D1–27311–00	36 – 1
2D1–27321–00	36 – 2
2D1–27410–00	36 – 11
4BP–27413–00	36 – 12
	36 – 26
1HX–27415–00	36 – 19
	36 – 37
2D1–2741L–10	36 – 42
2D1–27420–00	36 – 25
1NL–27424–00	36 – 16
	36 – 30
36Y–27424–01	36 – 55

CODIGO Nº	REF. Nº
2D1–27425–02	21 – 38
2D1–2742L–10	36 – 49
3VR–27431–01	36 – 41
5VX–27437–00	36 – 45
	36 – 52
3VR–27441–01	36 – 48
2D1–27442–10	36 – 15
2D1–27443–10	36 – 29
2D1–27486–00	36 – 18
2D1–27487–00	36 – 36
2D1–28100–00	22 – 46
2D1–28199–S4	22 – 47
2D1–28345–01	28 – 24
4XV–2834E–00	28 – 25
4KN–2836B–10	22 – 44
2D1–283E0–00	42 – 12
4D9–81168–00	45 – 19
	45 – 29
2D1–81410–01	38 – 2
5VY–81450–00	38 – 1
5VY–81670–01	45 – 23
2D1–81673–00	45 – 3
3AJ–81801–00	39 – 2
2D1–81815–00	39 – 7
2D1–81826–00	39 – 4
4XV–8182A–00	39 – 3
	39 – 8
11H–81844–00	39 – 5
1FK–81847–00	39 – 6
2D1–81890–00	39 – 1
2C0–81940–00	46 – 14
5JJ–81950–20	46 – 26
	46 – 42
5VK–81950–40	46 – 25
5JJ–81952–00	46 – 27
	46 – 43
1D7–81960–00	46 – 23
2D1–82100–00	46 – 10
5SL–82113–01	46 – 8
2D1–82116–00	46 – 38
5SL–82119–10	46 – 16
2D1–82122–10	22 – 16
2D1–82129–00	46 – 11
2D1–8212B–01	22 – 7
18G–82131–00	29 – 15
2D1–82131–00	46 – 12
36Y–82151–00	46 – 15
5JJ–82151–10	46 – 21

CODIGO Nº	REF. Nº
5JW–82151–10	46 – 20
5JJ–82151–30	46 – 22
2D1–82176–00	46 – 17
2D1–82309–00	45 – 10
5VY–82310–00	45 – 11
1C7–82380–00	11 – 17
2C0–82380–00	45 – 31
2D1–82386–00	11 – 10
5SL–82511–08	46 – 9
2D1–82530–00	46 – 4
3GB–82540–01	45 – 12
2D1–8255P–00	46 – 7
5VS–82566–61	46 – 1
5PS–82576–01	46 – 28
2D1–82589–00	46 – 36
2D1–82590–00	46 – 19
1UA–82591–00	21 – 19
	46 – 34
2D1–82910–00	44 – 1
3YX–82917–01	44 – 7
5PW–83310–01	40 – 1
1KH–83311–00	40 – 2
	40 – 6
	40 – 11
	40 – 16
2D1–83318–00	40 – 9
	40 – 14
5PW–83320–01	40 – 5
2D1–83330–20	40 – 10
5PW–8333A–00	40 – 3
	40 – 17
2D1–83340–20	40 – 15
5PW–8334A–00	40 – 7
	40 – 12
4GY–83350–00	46 – 41
2D1–83371–00	46 – 39
2D1–83500–A0	41 – 1
4XV–83513–00	41 – 4
	42 – 6
2D1–83559–00	41 – 2
4XV–83755–03	45 – 18
4XV–83912–11	44 – 2
5JJ–83913–00	44 – 10
5VS–83922–00	35 – 9
4XV–83945–00	44 – 3
5LV–83951–00	44 – 6
2D1–83969–00	44 – 11
2D1–83975–00	44 – 14

CODIGO Nº	REF. Nº
4HM–83980–00	35 – 12
2D1–84300–00	42 – 1
4K0–84314–G0	42 – 2
5DM–84347–00	42 – 4
2D1–84359–00	42 – 5
5JW–84397–00	42 – 3
2D1–84710–00	43 – 1
1A2–84714–41	43 – 3
2D1–84735–00	43 – 2
2D1–84736–00	43 – 4
2D1–84737–00	43 – 5
4HC–84744–00	43 – 9
2D1–84745–00	43 – 8
3Y6–85130–02	22 – 34
5VY–85720–00	45 – 14
8CC–85790–01	45 – 2
2D1–85820–00	45 – 7
5VY–85829–00	45 – 8
5VY–85850–10	11 – 4
2D1–85885–00	11 – 2
5FL–85885–02	11 – 3
8FP–85886–00	10 – 15
5VY–85896–00	45 – 28
2D1–8591A–90	46 – 6
2D1–8592A–00	13 – 2
5VY–8A8E0–00	45 – 15
5VY–8A8E1–00	45 – 24
2D1–W0041–00	35 – 2
5VX–W0042–50	37 – 6
5SL–W0045–00	31 – 8
	31 – 18
5VX–W0046–00	33 – 12
5SL–W0047–00	33 – 5
3GM–W0047–10	31 – 7
	31 – 17
3MA–W0047–10	31 – 5
	31 – 15
1J3–W0048–00	31 – 12
	31 – 22
1UY–W0048–00	33 – 16
4SV–W0057–00	31 – 4
	31 – 14
5SL–W0057–00	33 – 4
4SV–W0057–10	31 – 6
	31 – 16
2TV–W2470–00	29 – 21
2D1–W2587–00	35 – 1
2D1–W8250–90	46 – 5

CODIGO Nº	REF. Nº
2D1–YK241–00–P0	28 – 1
2D1–YK241–00–P9	28 – 1
90101–08013	32 – 26
90101–10025	36 – 3
90101–10033	21 – 43
90105–06026	1 – 6
90105–06065	6 – 15
90105–06066	6 – 22
90105–06078	38 – 5
90105–06085	42 – 13
90105–06174	42 – 14
90105–07006	5 – 4
90105–08101	14 – 13
90105–10211	24 – 33
	25 – 4
90105–10283	24 – 27
	24 – 30
90105–10290	45 – 6
90105–10638	31 – 23
90109–05005	10 – 23
90109–06015	7 – 29
90109–06031	22 – 5
90109–06078	42 – 11
90109–06100	14 – 14
90109–06253	22 – 8
90109–066F0	1 – 25
90109–08170	13 – 5
90109–08174	36 – 14
	36 – 28
90109–08195	46 – 32
90109–085G6	36 – 57
90110–05028	28 – 19
90110–05112	28 – 10
90110–06102	24 – 16
90110–06110	13 – 19
90110–06161	6 – 35
	6 – 42
	8 – 9
	14 – 7
	45 – 21
	45 – 26
90110–06164	18 – 16
90110–06167	6 – 25
90110–06168	7 – 13
90110–06172	15 – 38
90110–06173	8 – 6
90110–06174	6 – 43
90110–06175	45 – 30

CODIGO Nº	REF. Nº
90110–06176	16 – 15
90110–06178	1 – 24
90110–06182	8 – 14
	9 – 12
	15 – 31
	19 – 12
90110–06232	7 – 30
90110–06233	28 – 31
90110–06255	15 – 15
90110–06276	15 – 35
90110–06277	15 – 34
90110–06320	15 – 22
90110–06321	15 – 21
90110–06323	15 – 12
90110–06331	15 – 29
90110–08071	36 – 23
	36 – 39
90110–08099	15 – 13
90110–10024	21 – 7
	21 – 10
90110–10028	36 – 10
90111–05015	36 – 20
	36 – 38
90111–05019	28 – 29
90111–05024	28 – 32
90111–06031	7 – 43
90111–06043	22 – 4
90111–06060	13 – 11
90111–06078	7 – 46
90111–06098	20 – 22
	21 – 28
90111–10039	36 – 21
	36 – 32
90116–10023	14 – 9
90116–10032	14 – 8
90116–10048	32 – 16
90119–05021	37 – 26
90119–06230	23 – 13
90119–09012	14 – 10
90149–06043	31 – 2
90149–06064	15 – 6
90149–06067	38 – 3
90149–06134	29 – 23
90149–06162	21 – 24
90149–06165	23 – 3
90149–06302	24 – 41
90149–08009	33 – 2
90151–06022	15 – 41

CODIGO Nº	REF. Nº
90153–06002	6 – 38
90154–05035	28 – 17
90157–05025	36 – 13
	36 – 27
90157–10001	21 – 3
90159–05035	43 – 11
90159–05056	22 – 21
90159–06026	17 – 21
90164–05001	41 – 5
	42 – 7
	43 – 7
90167–05076	41 – 3
90170–06228	20 – 18
90170–08010	37 – 10
90176–06014	7 – 4
90176–10075	1 – 13
90176–28083	26 – 9
90179–05003	28 – 33
90179–08410	13 – 4
90179–10006	1 – 11
90179–10025	21 – 8
	21 – 11
90179–20007	17 – 23
90179–22011	18 – 37
90179–30691	26 – 5
90183–04039	46 – 31
90183–051A0	22 – 22
90185–10009	32 – 17
90185–10023	36 – 4
90185–18167	24 – 36
90185–24007	32 – 24
90201–04030	46 – 30
90201–05017	13 – 12
90201–05043	22 – 35
90201–06034	1 – 14
90201–06079	6 – 44
90201–06086	28 – 5
90201–06431	15 – 7
90201–06589	16 – 14
90201–08057	32 – 28
90201–08066	37 – 20
90201–10020	21 – 6
90201–10021	32 – 18
90201–10029	17 – 28
90201–10033	1 – 10
	1 – 12
90201–10035	36 – 9
90201–10039	45 – 5

CODIGO Nº	REF. Nº
90201–10065	26 – 20
90201–10669	36 – 58
90201–12575	20 – 9
90201–12790	45 – 1
90201–16027	36 – 5
90201–18013	24 – 37
90201–20016	16 – 3
90201–20017	16 – 9
90201–25020	32 – 25
90201–257H0	18 – 38
90201–281U8	26 – 8
90202–05088	28 – 34
90202–05224	28 – 30
90202–30235	26 – 6
90206–17084	36 – 22
	36 – 33
90208–20001	17 – 22
90209–08295	36 – 24
	36 – 40
90209–25011	18 – 4
90209–28008	18 – 22
90214–25003	18 – 13
90214–25004	18 – 12
90214–28002	18 – 28
90214–29002	18 – 27
90215–30233	18 – 36
90240–08005	37 – 19
90269–06001	21 – 17
90269–06003	21 – 33
90269–07007	24 – 12
90269–07008	24 – 21
90269–07076	22 – 27
90269–07077	22 – 9
	22 – 43
90282–03001	45 – 4
90338–08163	26 – 16
90340–12003	15 – 46
90340–14132	9 – 6
90340–18002	1 – 4
90340–32004	15 – 24
90387–05042	43 – 12
90387–06009	24 – 17
90387–06026	21 – 30
90387–06112	6 – 41
90387–06130	24 – 11
	24 – 15
90387–061W6	28 – 7
90387–06219	24 – 40

CODIGO Nº	REF. Nº
90387–06222	28 – 26
90387–062M9	23 – 12
90387–065J6	22 – 2
90387–06M60	13 – 23
90387–07391	7 – 28
90387–0804S	20 – 4
90387–10043	24 – 32
	25 – 3
90387–10050	36 – 8
90387–1012A	24 – 8
	24 – 29
	25 – 2
90387–10636	36 – 56
90387–1211D	20 – 12
90387–22002	30 – 8
90387–25007	18 – 7
90387–25008	18 – 31
90387–28001	32 – 19
90387–28003	18 – 2
90387–28004	18 – 25
90387–31003	18 – 20
90401–10172	35 – 19
	37 – 23
90401–20145	9 – 1
90413–07023	7 – 18
90430–06014	1 – 8
	6 – 37
90430–06166	14 – 18
90430–08143	15 – 26
90430–10005	35 – 20
	37 – 24
90430–10148	45 – 13
90445–08022	23 – 9
90445–087K6	23 – 11
90445–19002	36 – 7
90446–15386	37 – 4
90450–22017	7 – 39
90450–32001	6 – 34
	7 – 37
90450–35001	7 – 7
	7 – 34
	7 – 36
90450–38040	6 – 3
	7 – 8
90450–62002	10 – 2
	10 – 4
	10 – 6
	10 – 8

CODIGO Nº	REF. Nº
90461–10010	28 – 16
90462–08057	45 – 22
90464–04001	13 – 25
90464–07259	22 – 13
90464–07M40	23 – 16
90464–10008	34 – 13
90464–12012	46 – 37
90464–12036	46 – 33
90464–13073	7 – 20
	46 – 35
90464–15192	42 – 15
90464–16001	28 – 21
90464–16021	22 – 25
	22 – 32
90464–17003	24 – 18
90464–20191	34 – 18
90464–23002	7 – 40
90464–28003	12 – 10
90464–30040	11 – 37
90464–51001	45 – 20
90465–08053	45 – 17
90465–08054	45 – 27
90465–10098	35 – 18
	46 – 40
90467–080A1	23 – 10
	23 – 15
90467–09006	28 – 22
90467–11090	7 – 10
	7 – 17
	7 – 41
90467–120A3	37 – 16
90467–14015	10 – 25
90467–14171	10 – 20
90467–17128	12 – 8
90467–180A0	12 – 9
90467–18172	12 – 4
	12 – 6
90467–200A0	6 – 33
	6 – 45
	7 – 47
90480–01333	21 – 16
90480–01559	23 – 4
90480–08264	10 – 18
90480–11009	43 – 13
90480–12003	24 – 39
90480–12010	6 – 40
90480–12072	22 – 3
90480–12314	28 – 27

CODIGO Nº	REF. Nº
90480–13004	22 – 31
90480–13010	8 – 4
90480–13014	15 – 48
90480–14013	21 – 29
90480–14604	13 – 22
90480–15363	7 – 27
90480–18276	43 – 6
90480–20001	23 – 14
90501–064L1	19 – 9
90501–12743	36 – 43
	36 – 50
90501–230A0	17 – 20
90506–18020	36 – 6
90506–20014	37 – 3
90508–18051	17 – 27
90508–32020	20 – 11
91312–04025	46 – 29
91312–05010	28 – 11
91312–06016	28 – 4
91312–06025	9 – 10
91312–06040	6 – 20
91312–06080	39 – 9
91312–06090	28 – 8
91312–08030	26 – 15
91314–06020	5 – 8
91314–06105	1 – 15
91314–08030	26 – 11
	27 – 35
91314–08040	27 – 33
91317–05020	34 – 10
91317–05025	34 – 11
91317–06050	34 – 6
91380–06014	13 – 14
	15 – 49
91401–20012	37 – 21
91401–25015	36 – 47
	36 – 54
91492–12010	11 – 6
91702–08040	36 – 46
	36 – 53
91808–16023	1 – 5
91808–30031	6 – 24
92012–05030	46 – 2
92012–06014	24 – 10
	24 – 14
	24 – 20
92014–08012	15 – 27
92014–08020	37 – 18

CODIGO Nº	REF. Nº
92502–06010	11 – 18
92902–04100	35 – 14
92902–04600	35 – 15
92902–05200	43 – 14
92902–10200	26 – 19
92907–08600	17 – 2
92990–03100	11 – 21
92990–06600	13 – 16
93102–12106	20 – 7
93102–12372	6 – 9
93102–15212	17 – 5
93102–40330	18 – 33
93106–28043	30 – 4
93106–40013	32 – 3
	32 – 14
93109–17071	24 – 7
	24 – 26
93210–04092	14 – 3
93210–06667	6 – 28
	8 – 12
93210–09165	8 – 11
93210–14003	8 – 8
	14 – 6
93210–15566	9 – 4
93210–16325	15 – 43
93210–18397	16 – 10
93210–22298	8 – 3
93210–22382	15 – 9
	15 – 45
93210–235A1	6 – 30
	6 – 39
	7 – 14
93210–27194	15 – 18
93210–27370	6 – 31
93210–32172	15 – 25
93210–357A2	6 – 26
93210–47675	6 – 4
93210–49046	7 – 3
93210–57003	15 – 40
93305–20605	18 – 18
93306–00106	6 – 8
	19 – 3
93306–00304	17 – 19
93306–00420	30 – 3
93306–20124	15 – 2
93306–20230	16 – 11
93306–20531	32 – 2
	32 – 13

CODIGO Nº	REF. Nº
93306–205A2	18 – 39
93306–20652	18 – 11
93306–27208	18 – 14
93310–232R9	17 – 24
93315–31502	17 – 6
93315–31758	24 – 25
93315–41762	24 – 6
93315–42536	24 – 4
93317–11096	17 – 4
93317–11295	20 – 6
93317–33590	32 – 4
93317–42599	24 – 3
93399–99932	26 – 3
93399–99957	26 – 1
93420–61M07	32 – 5
93440–28184	18 – 5
93440–31187	18 – 23
93440–52009	18 – 40
93440–62032	18 – 34
93450–18157	3 – 9
93501–04011	36 – 44
	36 – 51
93603–12007	6 – 13
	6 – 18
93603–17070	6 – 16
93605–10108	15 – 3
93607–44002	5 – 11
93610–20189	15 – 20
93900–00030	30 – 6
	32 – 10
94112–17094	30 – 5
94119–17062	32 – 9
94580–25078	8 – 1
94582–10122	32 – 29
94591–60122	5 – 5
94682–05031	32 – 30
94701–00403	1 – 16
95022–06008	46 – 18
95022–06016	45 – 16
95022–06020	20 – 14
95022–10016	21 – 41
95024–06012	1 – 7
95024–06025	6 – 5
95024–10040	21 – 5
95027–06020	44 – 5
95302–08600	32 – 27
95304–06700	20 – 19
95602–05100	22 – 36

CODIGO Nº	REF. Nº
95602–05100	43 – 15
95602–05200	46 – 3
95602–06200	22 – 6
	29 – 4
95602–10200	21 – 44
	24 – 28
	24 – 31
	24 – 34
	25 – 5
	26 – 18
95604–10200	21 – 4
95607–06200	44 – 4
95612–08625	1 – 9
95617–06100	35 – 8
95702–06500	13 – 15
	13 – 24
	29 – 13
	29 – 19
	35 – 25
95802–06008	36 – 35
95802–06012	7 – 33
95812–06012	35 – 24
95812–06050	14 – 17
95812–06060	14 – 15
95812–06070	14 – 16
95812–08016	21 – 39
95812–08025	22 – 37
95812–08050	14 – 11
95812–08060	14 – 12
95814–08030	13 – 8
95814–10040	36 – 59
95822–06020	22 – 40
	29 – 14
95822–06025	46 – 24
95822–08012	22 – 28
97702–50014	42 – 8
97702–50016	22 – 33
97702–50025	10 – 24
97702–50514	45 – 9
97702–50520	10 – 16
97702–60520	45 – 32
97706–04012	40 – 4
	40 – 8
	40 – 13
	40 – 18
	43 – 10
98502–04012	35 – 13
98502–05014	11 – 14

CODIGO Nº	REF. Nº
98502–06012	11 – 7
98507–03016	11 – 20
98507–04010	44 – 9
98507–05022	44 – 15
98507–05030	44 – 12
98507–05045	44 – 13
98507–06020	11 – 35
98704–03020	44 – 8
98902–05008	28 – 15
98902–06012	22 – 23
99001–07600	17 – 3
99002–10600	20 – 8
99009–10400	17 – 29
99480–10018	15 – 11
99530–08012	9 – 8
99530–10014	14 – 4
99530–10114	1 – 27
	2 – 3

CODIGO Nº	REF. Nº

CODIGO Nº	REF. Nº

CODIGO Nº	REF. Nº

CODIGO Nº	REF. Nº

CODIGO Nº	REF. Nº