YAMAHA

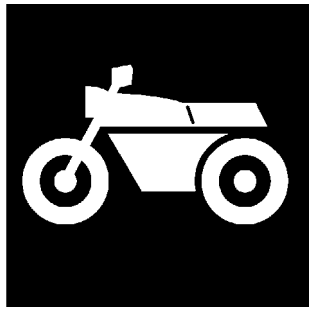

CATALOGO DE REPUESTOS

FZ1-NA (22CF) EUROPE

1L22C-352S1

( )

YAMAHA GENUINE Parts & Accessories

FZ1-NA
CATALOGO DE REPUESTOS
©2011 por Yamaha Motor Co., Ltd.
1ª edición, septiembre 2011
Todos los derechos reservados.
Toda reproducción o uso no autorizado
sin el consentimiento escrito de
Yamaha Motor Co., Ltd.
quedan expresamente prohibidos
Impreso en Japón.

PROLOGO

Este catálogo de repuestos corresponde a las piezas para el o los modelos que figuran en la página de portada. Al formular el pedido de repuestos, se ruega citar este catálogo y especificar correctamente el número y el nombre de las piezas.

1. Las modificaciones y agregados que se hayan realizado después de la edición de este Catálogo de Repuestos, serán anunciados en las Informaciones de Recambios.
   Es recomendable que se hagan las correcciones necesarias en el Catálogo de Repuestos de acuerdo con las Informaciones de Recambios.

2. Abreviaciones
   En este. Catálogo de Repuestos se emplean las siguientes abreviaciones.

   "UR" Usar el número de partes especificado
   "UN" Usar la cantidad necesaria
   "AP" Piezas sustitutivas
   "LM" Fabricación local (Hay que pedir los repuestos en las cercanías)
   "F#" Nº de bastidor (Nº aplicable a la máquina)
   "O/S" Sobredimensionado

3. La cantidad de componentes para el montaje
   - Los componentes, suministrados como conjunto, se describen con un punto (.) que precede al nombre del parte como se indica a continuación.
   - La numeración que aparece a la derecha de cada descripción indica la cantidad de partes por cada unidad de conjunto.

CODIGO Nº	DESCRIPCION	CANT.	OBSERVACIONES
2F5–83310–60	ENSAMBLAJE DE LA LUZ	2	
115–83311–60	.BOMBILLA (6V–18W)	1	

4. Los colores de los componentes se indican como sigue en la columna de "OBSERVACIONES".

CODIGO Nº	DESCRIPCION	CANT.	OBSERVACIONES
2N4–24110–00–X5	COMP. DEL TANQUE	2	MXR
3J1–24240–10	.GRAFICO, DEL TANQUE	1	PARA MXR

5. Debe tenerse en cuenta que las ilustraciones sirven como guia para la búsqueda de los números de partes y no deben usarse para el montaje. Durante el montaje, se recomienda usar el manual de taller correspondiente.

6. EL asterisco (*) antes del número de referencia indica los elementos modificados después de la primera edición.

7. Números de serie

Nº de Serie del motor

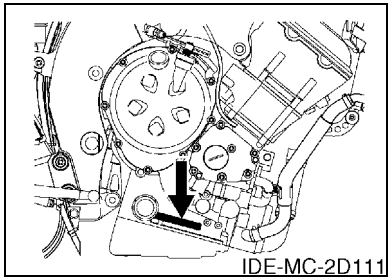

Nº de Serie del bastidor

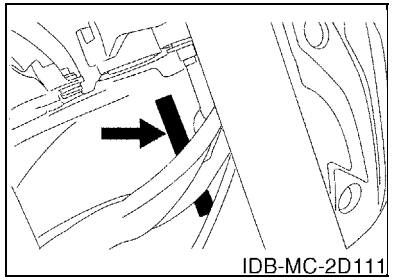

8. Códigos de color aplicables (El símbolo (*) muestra el color de modelo.)

Abreviatura	Nombre de color	Código de color
BWC1(*)	BLUISH WHITE COCKTAIL 1	0390
LGB	LOW GLOSS BLACK	0098
MBL2	MAT BLACK 2	0582
SMX(*)	BLACK METALLIC X	0903

ROTULO DE MODELO

(1) El rótulo llamada “Rótulo de Modelo” está en la ubicación indicada abajo en el (3). Cuando se utilice este catálogo de repuestos, se ruega cotejar entre el “código de modelo–número de código de producción” del catálogo y el “código de modelo–número de código de producción” indicado en el Rótulo de Modelo fijado en el producto correspondiente.

(2) Indicación del “Rótulo de Modelo”

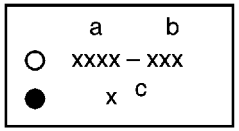

a: Código de tipo de Modelo

b: Número de código de Producción

c: Tipo de color

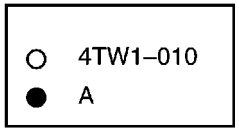

(3) Ubicación de fijación del Rótulo de Modelo

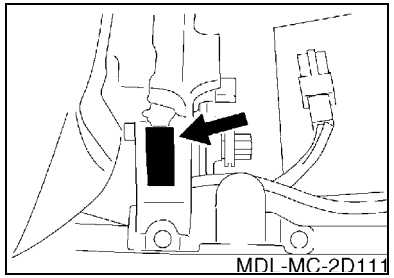

(4) Información de Color

Código de Modelo	Código de tipo de color	Código de color	Nombre de color	Abreviatura
22CF	A	0903	BLACK METALLIC X	SMX
	B	0390	BLUISH WHITE COCKTAIL 1	BWC1

(5) Código de Modelo–Número de código de Producción del Modelo Listado en este Catálogo de Repuestos

Código de Modelo	Número de Código de Producción	País (destino)
22CF	010	SPAIN

CONTENIDO

MOTOR

CULATA DE CILINDRO 1
CILINDRO 3
CIGUENAL & PISTON 4
VALVULA 5
ARBOL DE LEVAS & CADENA 7
BOMBA DE AGUA 8
RADIADOR & MANGUERA 10
BOMBA DE ACEITE 12
FILTRO ACEITE 13
ADMISION 14
ADMISION 2 15
SYSTEMA DE INDUCCION DE AIRE 17
DESCARGA 18
CARTER 19
CUBIERTA DE CARTER 1 20
ARRANQUE 22
EMBRAGUE 23
TRANSMISION 25
LEVA DE CAMBIO & HORQUILLA 27
EJE DE CAMBIO & PEDAL 28

SHASIS

CUADRO 29
GUARDABARRO 31
CUBIERTA LATERAL 34
BRAZO TRASERO 36
SUSPENSION TRASERO 38
DIRECCION 39
HORQUILLA DELANTERA 40
DEPOSITO DE COMBUSTIBLE 42
ASIENTO 44
RUEDA DELANTERA 45
CALIBRE FRENO DELANTERA 46
RUEDA TRASERA 47
CALIBRE FRENO TRASERA 49
MANILLAR & CABLE 50
CILINDRO MAESTRO DELANTERO 51
SOPORTE & APOYAPIE 53
CILINDRO MAESTRO TRASERO 56
GENERADOR 58
MOTOR DE ARRANQUE 59
LUZ DE DESTELLADOR 60
MEDIDOR 61
FARO DELANTERO 62
LUZ DE COLA 63
INTERRUPTOR DE MANILLAR&PALANC 64
EQUIPO ELECTRICO 1 65
EQUIPO ELECTRICO 2 67
EQUIPO ELECTRICO 3 69

INDICE

INDICE NUMERICO 71

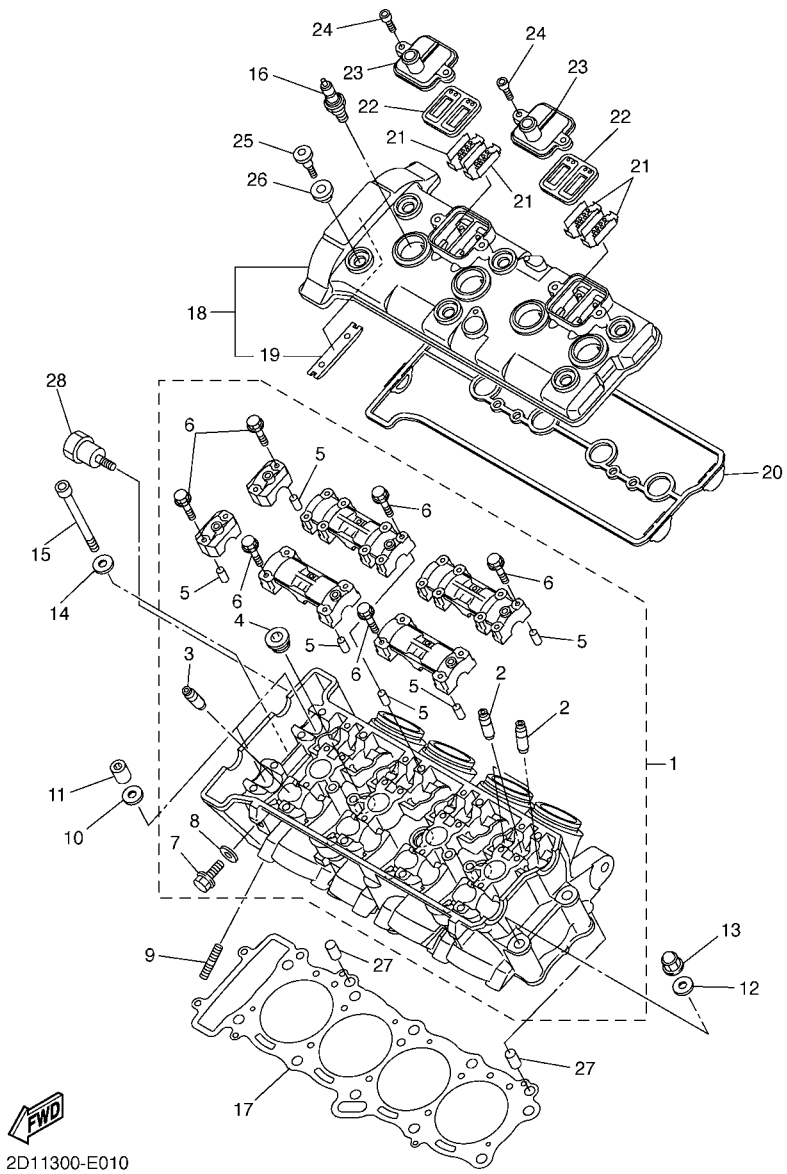

FIG. 1 CULATA DE CILINDRO

REF. Nº	CODIGO Nº	DESCRIPCION	22CF					OBSERVACIONES
1	5VY–11101–20	CULATA DE CILINDRO COMPLETA	1					
2	5VY–11133–30	.GUIA DE VALVULA 1	12					
3	5VY–11134–10	.GUIA DE VALVULA 2	8					
4	90340–18002	.TORNILLO, DE DRENAJE	3					
5	91808–16023	.PASADOR DE CLAVIJA	12					
6	90105–06026	.TORNILLO	28					
7	95024–06012	.PERNO, BRIDA	1					
8	90430–06014	.JUNTA	1					
9	95612–08625	PERNO DE PUNTAL	8					
10	90201–10033	ARANDELA PLANA	8					
11	90179–10006	TUERCA	8					
12	90201–10033	ARANDELA PLANA	2					
13	90176–10075	TUERCA CORONA	2					
14	90201–06034	ARANDELA PLANA	2					
15	91314–06105	TORNILLO ALLEN	2					
16	94701–00318	BUJIA (NGK R CR9E)	4					
17	2D1–11181–00	JUNTA, DE CULATA 1	1					
18	5VY–11191–02	TAPA CULATA DE CILINDRO 1	1					
19	5BE–12241–00	.TOPE DE GUIA 2	1					
20	5VY–11193–10	EMPAQUE	1					
21	5VY–1482K–00	PLACA	4					
22	5SL–14890–10	VALVULA DE LENGUETA COMPLETA	2					
23	5VY–14899–01	TAPA, DE CAJA	2					
24	90110–06178	TORNILLO ALLEN	4					
25	90109–066F0	PERNO	6					
26	5VY–1111G–00	CASQUILLO DE GOMA	6					
27	99530–10114	PASADOR, DE ESPIGA	2					

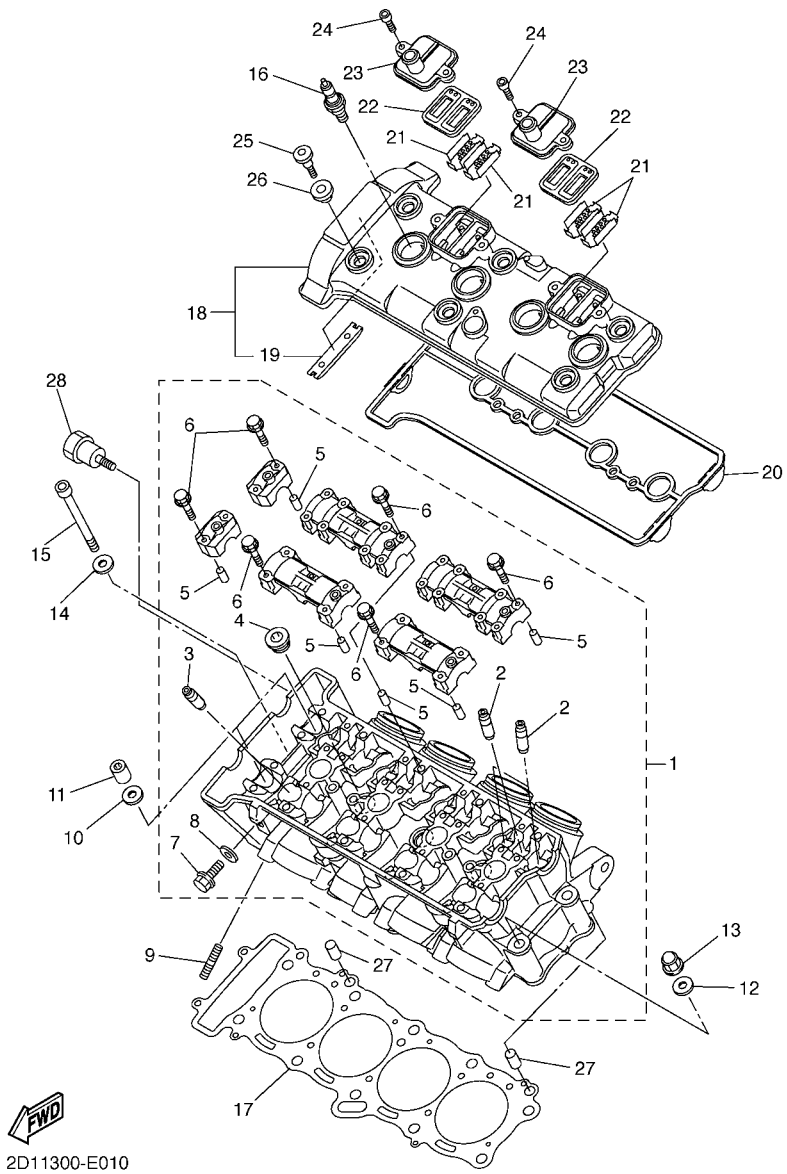

FIG. 1 CULATA DE CILINDRO

REF. Nº	CODIGO Nº	DESCRIPCION	22CF					OBSERVACIONES
28	2D1–11026–00	PERNO	1					

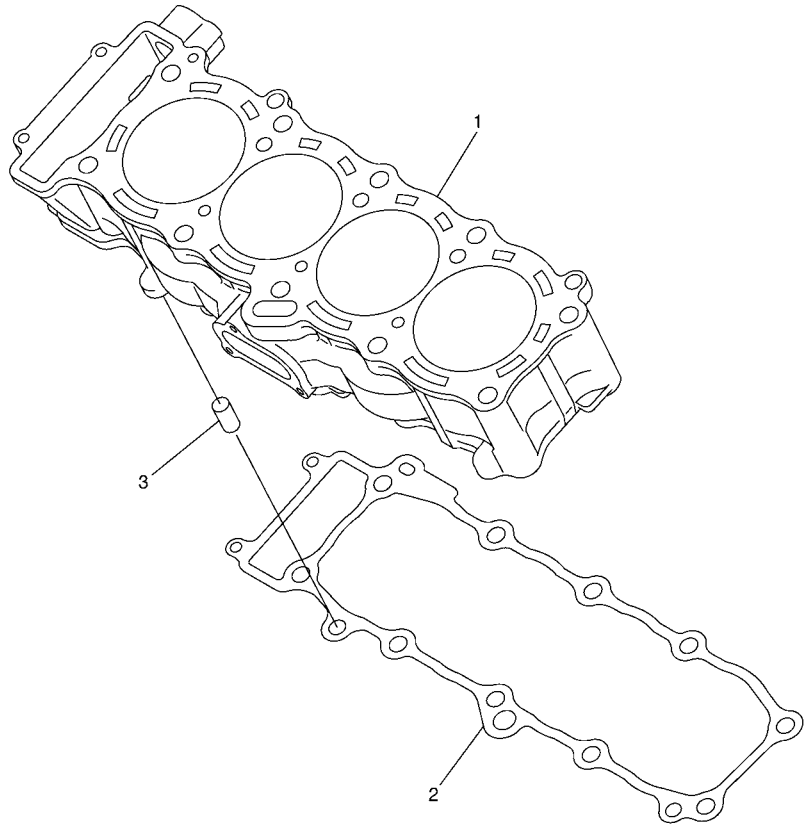

5VY1300-C020

FIG. 2 CILINDRO

REF. Nº	CODIGO Nº	DESCRIPCION	22CF					OBSERVACIONES
1	5VY–11311–10	CILINDRO 1	1					
2	5VY–11351–00	JUNTA, DE CILINDRO	1					
3	99530–10114	PASADOR, DE ESPIGA	2					

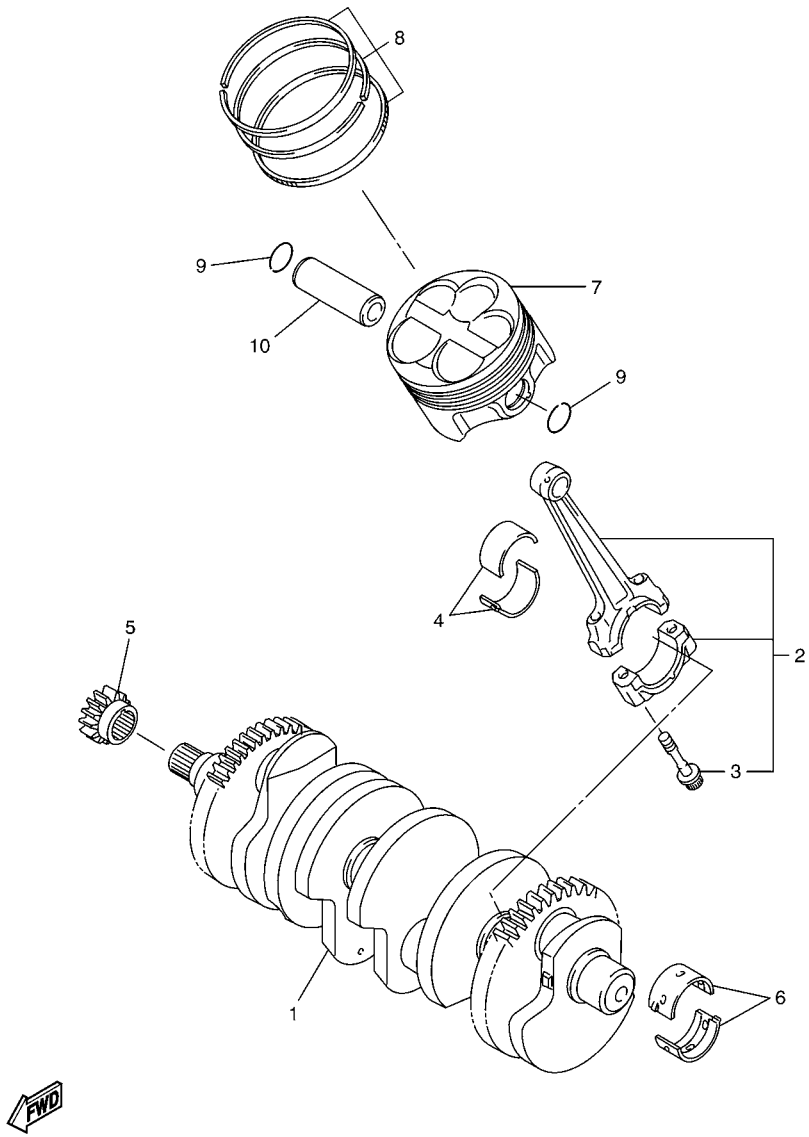

FIG. 3 CIGUENAL & PISTON

REF. Nº	CODIGO Nº	DESCRIPCION	22CF					OBSERVACIONES
1	2D1–11411–00	CIGUENAL	1					
2	14B–11650–00	BIELA COMPLETA	4					
3	5VY–11654–01	.TORNILLO DE BIELA	2					
4	2D1–11656–00	COJINETE PLANO	8					UR AZUL
	2D1–11656–10	COJINETE PLANO	8					UR NEGRO
	2D1–11656–20	COJINETE PLANO	8					UR MARRON
	2D1–11656–30	COJINETE PLANO	8					UR VERDE
5	5VY–11549–00	CATALINA CADENA DE LEVA	1					
6	5VY–11416–A0	COJINETE PLANO 1	10					UR BLANCO
	5VY–11416–00	COJINETE PLANO 1	10					UR AZUL
	5VY–11416–10	COJINETE PLANO 1	10					UR NEGRO
	5VY–11416–20	COJINETE PLANO 1	10					UR MARRON
	5VY–11416–30	COJINETE PLANO 1	10					UR VERDE
7	5VY–11631–10	PISTON (NORMA)	4					
8	5VY–11603–01	JUEGO DE ANILLOS (NORMA)	4					
9	93450–18157	SEGURO	8					
10	5VY–11633–00	PASADOR, PISTON	4					

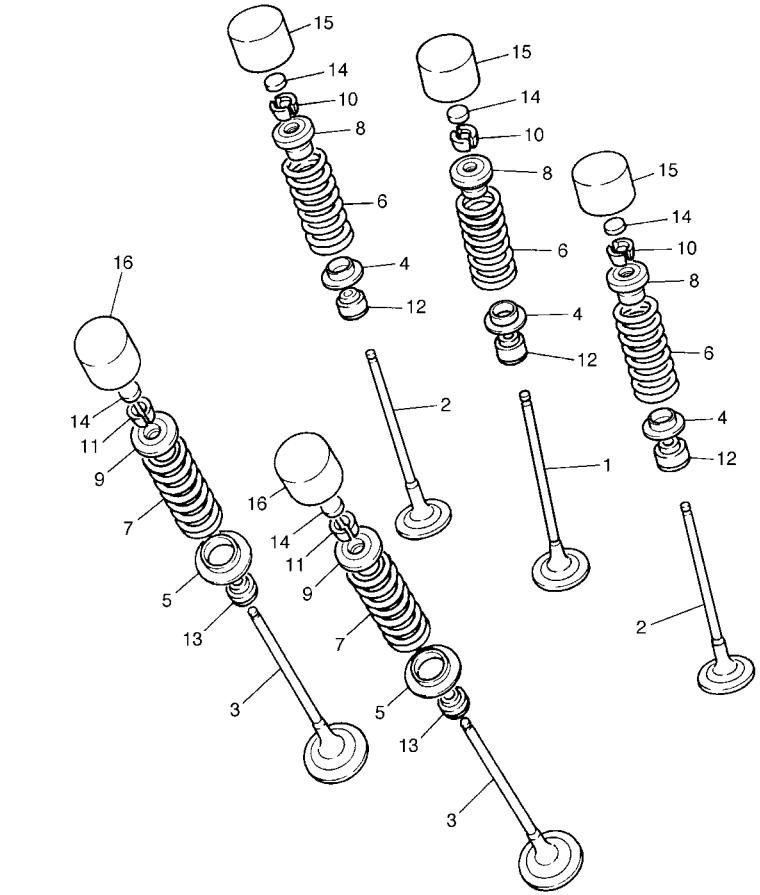

5VY1300-C040

FIG. 4 VALVULA

REF. Nº	CODIGO Nº	DESCRIPCION	22CF					OBSERVACIONES
1	2D1–12111–00	VALVULA DE ADMISION	4					
2	2D1–12112–00	VALVULA, DE ADMISION 2	8					
3	5VY–12121–00	VALVULA DE ESCAPE	8					
4	5NL–12116–00	ASIENTO RESORTE DE VALVULA	12					
5	3GM–12126–00	ASIENTO RESORTE DE VALVULA2	8					
6	2D1–12113–00	RESORTE VALVULA INTERNA	12					
7	2D1–12114–00	RESORTE VALVULA EXTERIOR	8					
8	1HX–12117–00	RETEN RESORTE DE VALVULA	12					
9	1WG–12117–00	RETEN RESORTE DE VALVULA	8					
10	1HX–12118–00	SEGURO DE VALVULA	24					
11	1WG–12118–00	SEGURO DE VALVULA	16					
12	4TV–12119–00	SELLO DE ACEITE VALVULA	12					
13	4SV–12119–00	SELLO DE ACEITE VALVULA	8					
14	1HX–12168–00	COJIN, AJUSTADOR 2 (1.20)	20					UR
	1HX–12168–20	COJIN, AJUSTADOR 2 (1.25)	20					UR
	1HX–12168–40	COJIN, AJUSTADOR 2 (1.30)	20					UR
	1HX–12168–60	COJIN, AJUSTADOR 2 (1.35)	20					UR
	1HX–12168–80	COJIN, AJUSTADOR 2 (1.40)	20					UR
	1HX–12168–A0	COJIN, AJUSTADOR 2 (1.45)	20					UR
	1HX–12168–F0	COJIN, AJUSTADOR 2 (1.50)	20					UR
	1HX–12168–H1	COJIN, AJUSTADOR 2 (1.55)	20					UR
	1HX–12168–K1	COJIN, AJUSTADOR 2 (1.60)	20					UR
	1HX–12168–M1	COJIN, AJUSTADOR 2 (1.65)	20					UR
	1HX–12168–R1	COJIN, AJUSTADOR 2 (1.70)	20					UR
	1HX–12168–U1	COJIN, AJUSTADOR 2 (1.75)	20					UR
	1HX–12168–W1	COJIN, AJUSTADOR 2 (1.80)	20					UR
	1HX–12168–Y1	COJIN, AJUSTADOR 2 (1.85)	20					UR

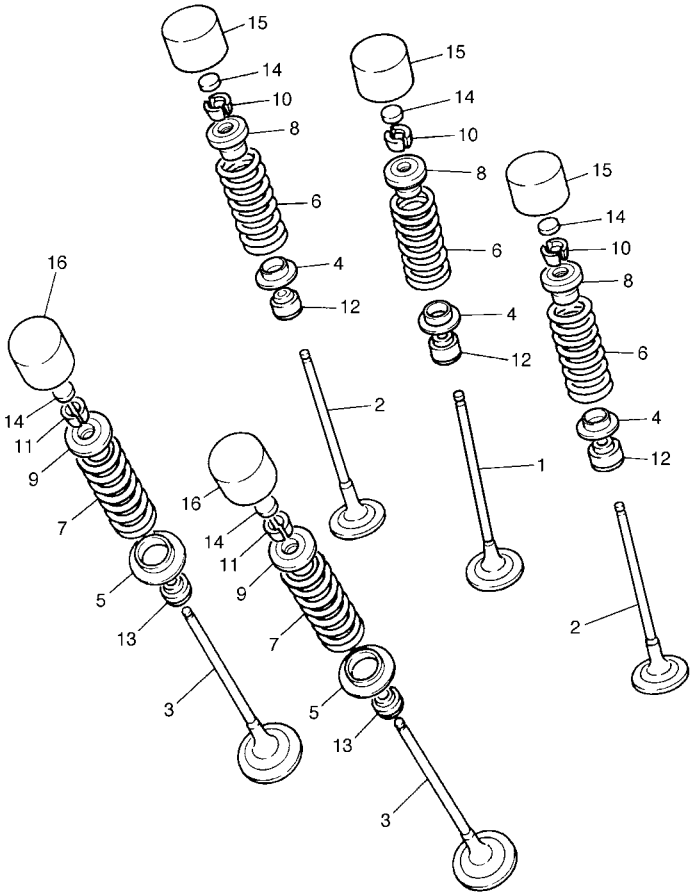

5VY1300-C040

FIG. 4 VALVULA

REF. Nº	CODIGO Nº	DESCRIPCION	22CF					OBSERVACIONES
14	1HX–12169–11	COJIN, AJUSTADOR 2 (1.90)	20					UR
	1HX–12169–31	COJIN, AJUSTADOR 2 (1.95)	20					UR
	1HX–12169–50	COJIN, AJUSTADOR 2 (2.00)	20					UR
	1HX–12169–70	COJIN, AJUSTADOR 2 (2.05)	20					UR
	1HX–12169–90	COJIN, AJUSTADOR 2 (2.10)	20					UR
	1HX–12169–E0	COJIN, AJUSTADOR 2 (2.15)	20					UR
	1HX–12169–G0	COJIN, AJUSTADOR 2 (2.20)	20					UR
	1HX–12169–J0	COJIN, AJUSTADOR 2 (2.25)	20					UR
	1HX–12169–L0	COJIN, AJUSTADOR 2 (2.30)	20					UR
	1HX–12169–N0	COJIN, AJUSTADOR 2 (2.35)	20					UR
	1HX–12169–T0	COJIN, AJUSTADOR 2 (2.40)	20					UR
15	3LN–12153–20	LEVANTADOR DE VALVULA	12					UR AZUL
	3LN–12153–30	LEVANTADOR DE VALVULA	12					UR ROJO
	3LN–12153–09	LEVANTADOR DE VALVULA (O/S)	12					UR VERDE
16	3FV–12153–20	LEVANTADOR DE VALVULA	8					UR AZUL
	3FV–12153–30	LEVANTADOR DE VALVULA	8					UR ROJO
	3FV–12153–09	LEVANTADOR DE VALVULA (O/S)	8					UR VERDE

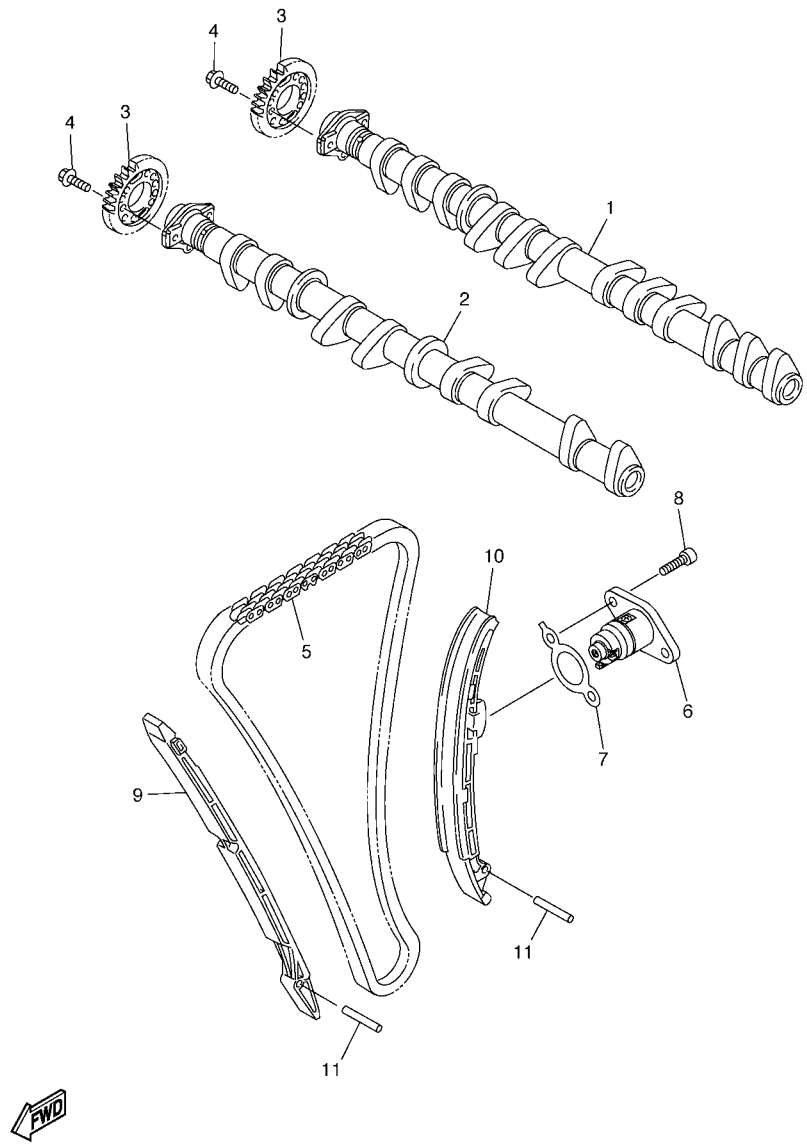

5VYE300-E050

FIG. 5 ARBOL DE LEVAS & CADENA

REF. Nº	CODIGO Nº	DESCRIPCION	22CF					OBSERVACIONES
1	2D1–12170–10	ARBOL DE LEVAS COMPLETO 1	1					
2	2D1–12180–20	ARBOL DE LEVAS COMPLETO 2	1					
3	14B–12176–00	CATALINA DE CADENA	2					
4	90105–07006	TORNILLO	4					
5	94591–60122	CADENA	1					
6	5VY–12210–21	TENSOR CADENA DE LEVA	1					
7	2D1–12213–00	EMPAQUE DE CAJA TENSOR	1					
8	91314–06020	TORNILLO ALLEN	2					
9	5VY–12251–00	AMORTIGUADOR CADENA 1	1					
10	5VY–12252–01	AMORTIGUADOR CADENA 2	1					
11	93607–44002	PASADOR DE CLAVIJA	2					

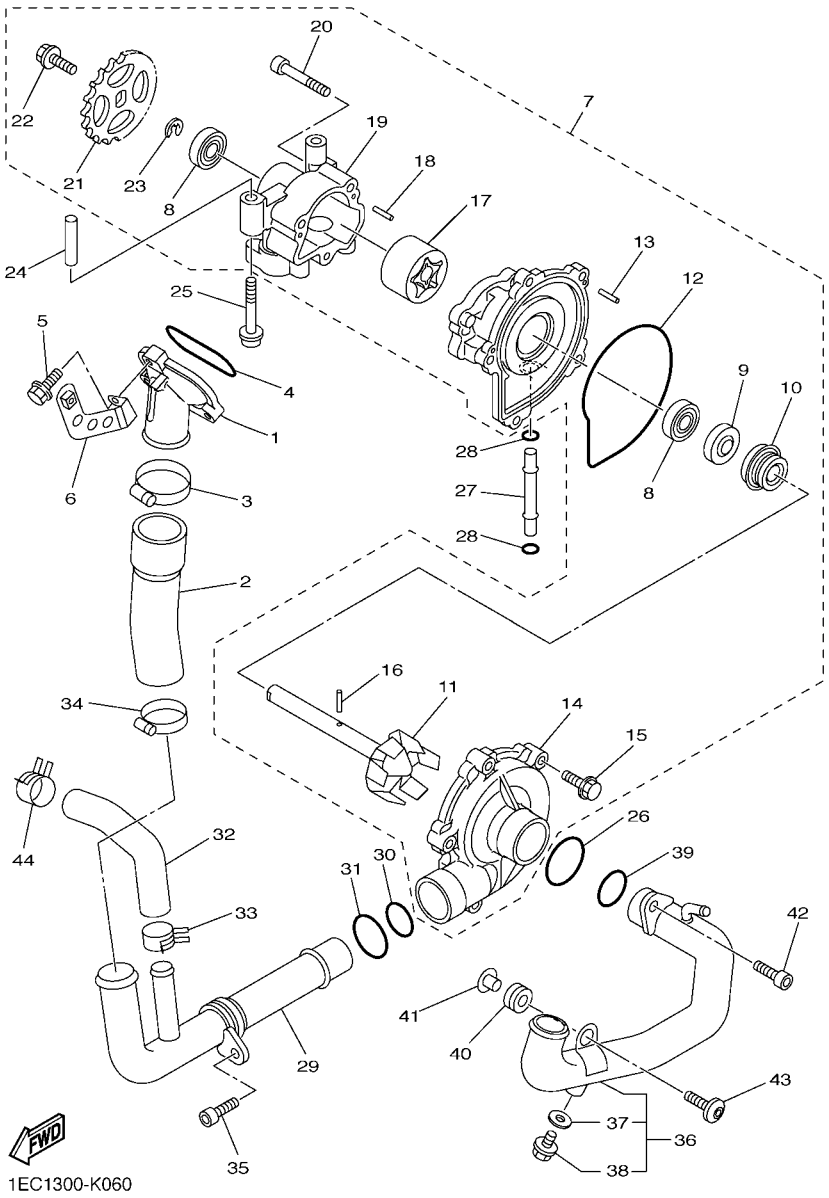

FIG. 6 BOMBA DE AGUA

REF. Nº	CODIGO Nº	DESCRIPCION	22CF					OBSERVACIONES
1	5VY–12469–10	CONDUCTO	1					
2	5VY–12576–00	MANGUERA 1	1					
3	90450–38040	BRIDA, MANGUERA	1					
4	93210–47675	ANILLO O	1					
5	95024–06025	PERNO, BRIDA	3					
6	2D1–12637–00	SOPORTE 1	1					
7	4C8–12420–20	BOMBA DE AGUA COMPLETA	1					
8	93306–00106	.COJINETE	2					
9	93102–12372	.SELLO ACEITE	1					
10	4C8–12438–00	.SELLO MECANICO	1					
11	4C8–12450–10	.EJE IMPULSOR COMPLETO	1					
12	4XV–12439–00	.ANILLO O	1					
13	93603–12007	.PASADOR DE CLAVIJA	2					
14	5VY–12422–00	.CUBIERTA DE CAJA	1					
15	90105–06065	.TORNILLO	5					
16	93603–17070	.PASADOR DE CLAVIJA	1					
17	5VY–13310–10	.ROTOR COMPLETO 1	1					
18	93603–12007	.PASADOR DE CLAVIJA	2					
19	5VY–13336–00	.CAJA DE ROTOR	1					
20	91312–06040	.TORNILLO	3					
21	5VY–13355–00	.CATALINA IMPULSADA	1					
22	90105–06066	.TORNILLO	1					
23	99009–12400	.PRESILLA REDONDA	1					
24	91808–30031	PASADOR DE CLAVIJA	1					
25	90110–06167	TORNILLO ALLEN	2					
26	93210–357A2	ANILLO O	1					
27	4XV–12485–00	TUBO 5	1					

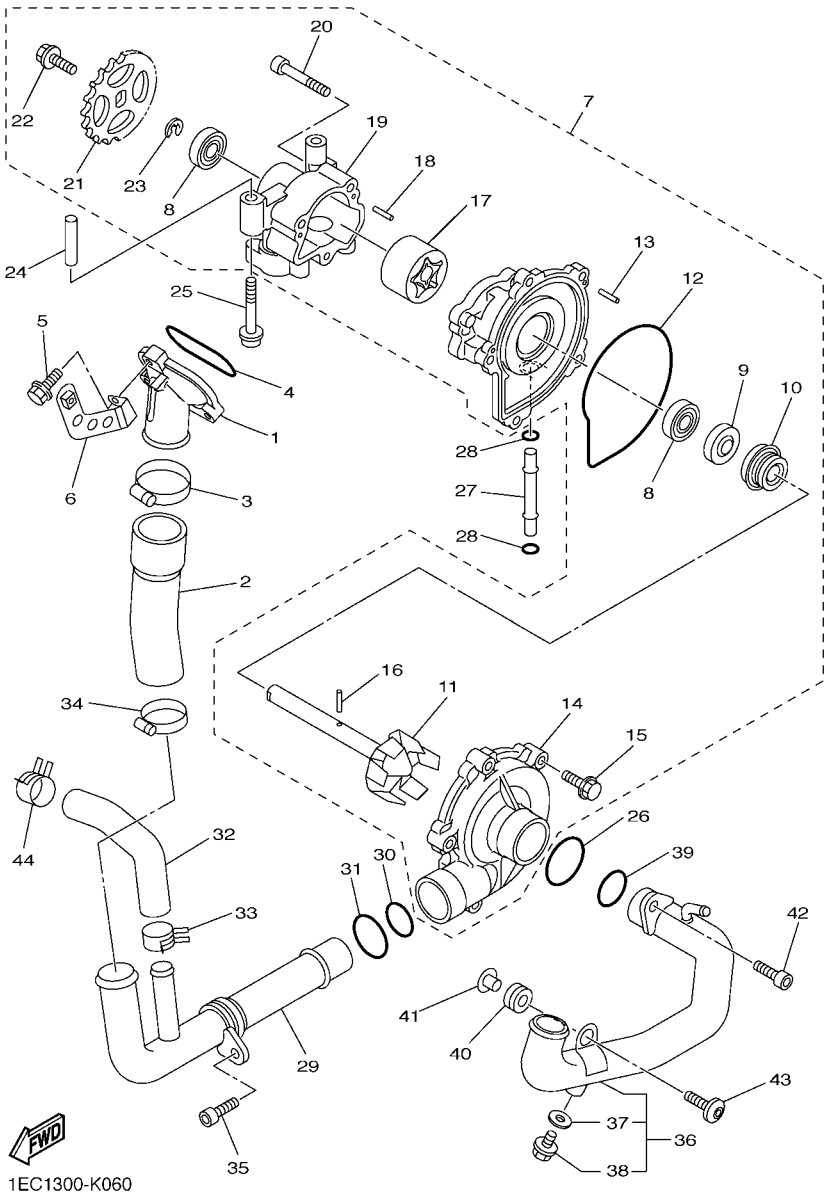

FIG. 6 BOMBA DE AGUA

REF. Nº	CODIGO Nº	DESCRIPCION	22CF					OBSERVACIONES
28	93210–06667	ANILLO O	2					
29	39P–12481–00	TUBO 1	1					
30	93210–235A1	ANILLO O	1					
31	93210–27370	ANILLO O	1					
32	5VY–12588–00	MANGUERA 5	1					
33	90467–200A0	PRESILLA	1					
34	90450–32006	BRIDA, MANGUERA	1					
35	90110–06161	TORNILLO ALLEN	1					
36	2D1–12484–01	TUBO 4	1					
37	90430–06014	.JUNTA	1					
38	90153–06002	.TORNILLO HEXAGONAL	1					
39	93210–235A1	ANILLO O	1					
40	90480–12010	TAPON	1					
41	90387–06112	ESPACIADOR	1					
42	90110–06161	TORNILLO ALLEN	1					
43	90149–06022	TORNILLO DE REGLAJE	1					
44	90467–200A0	PRESILLA	1					

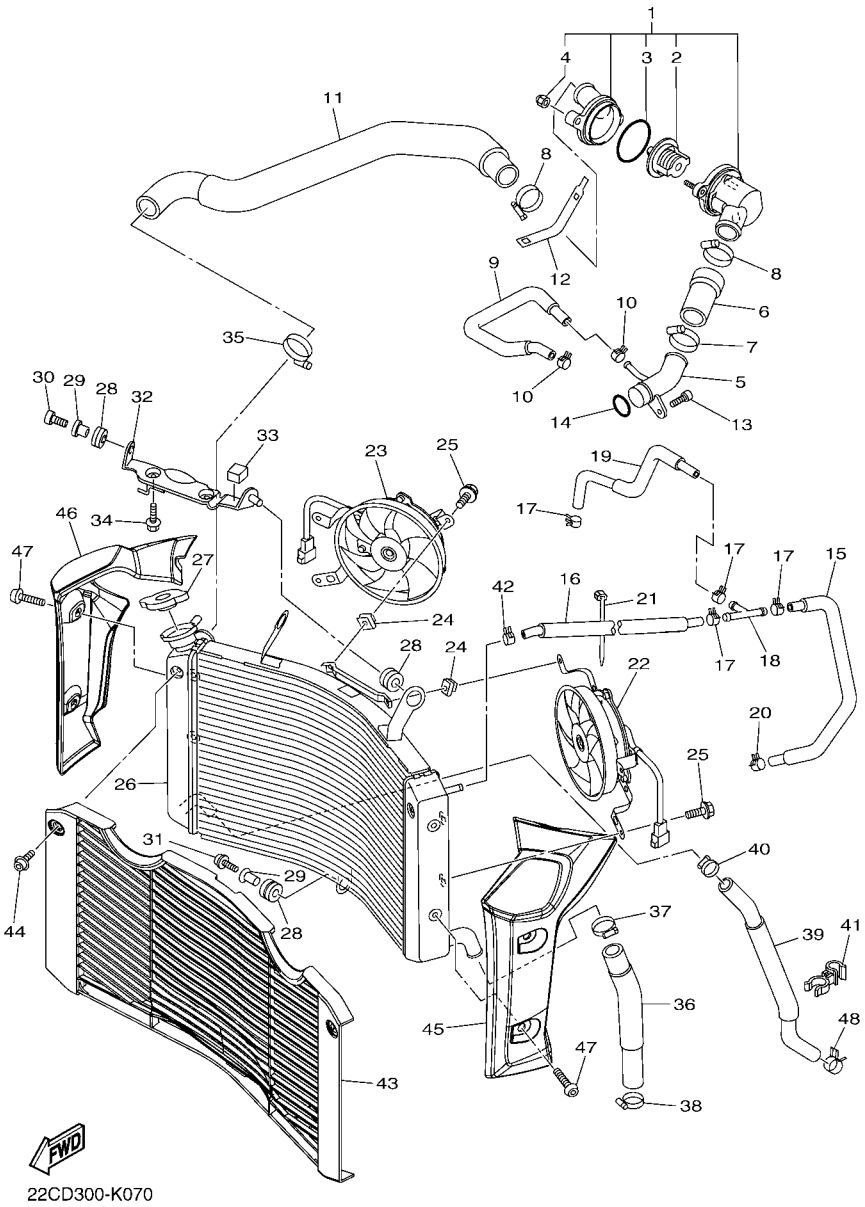

FIG. 7 RADIADOR & MANGUERA

REF. Nº	CODIGO Nº	DESCRIPCION	22CF					OBSERVACIONES
1	2D1–12410–00	TERMOSTATO CONJUNTO	1					
2	5LP–12411–00	.TERMOSTAT	1					
3	93210–49046	.ANILLO O	1					
4	90176–06014	.TUERCA CORONA	2					
5	5VY–12485–10	TUBO 5	1					
6	5VY–12579–00	MANGUERA 4	1					
7	90450–35001	BRIDA, MANGUERA	1					
8	90450–38040	BRIDA, MANGUERA	2					
9	5VY–1243F–01	MANGUERA 3	1					
10	90467–11090	PRESILLA	2					
11	2D1–12578–00	MANGUERA 3	1					
12	5GV–1246A–00	CUBIERTA 1	1					
13	90110–06161	TORNILLO ALLEN	1					
14	93210–235A1	ANILLO O	1					
15	5VY–1243A–00	TUBO 1	1					
16	2D1–1244G–00	MANGUERA 4	1					
17	90467–11090	PRESILLA	4					
18	90413–07023	UNION	1					
19	2D1–1243E–01	TUBO 2	1					
20	90467–10039	PRESILLA	1					
21	90464–13073	BRIDA	1					
22	2D1–12405–01	COMPRESOR	1					
23	2D1–12405–11	COMPRESOR	1					
24	1AA–12535–00	EMPAQUETADURA	2					
25	2D1–12675–00	PERNO, SUJECION VENTILADOR	6					
26	2D1–12461–00	RADIADOR COMPLETO	1					
27	22W–12462–00	TAPON, DEL RADIADOR	1					

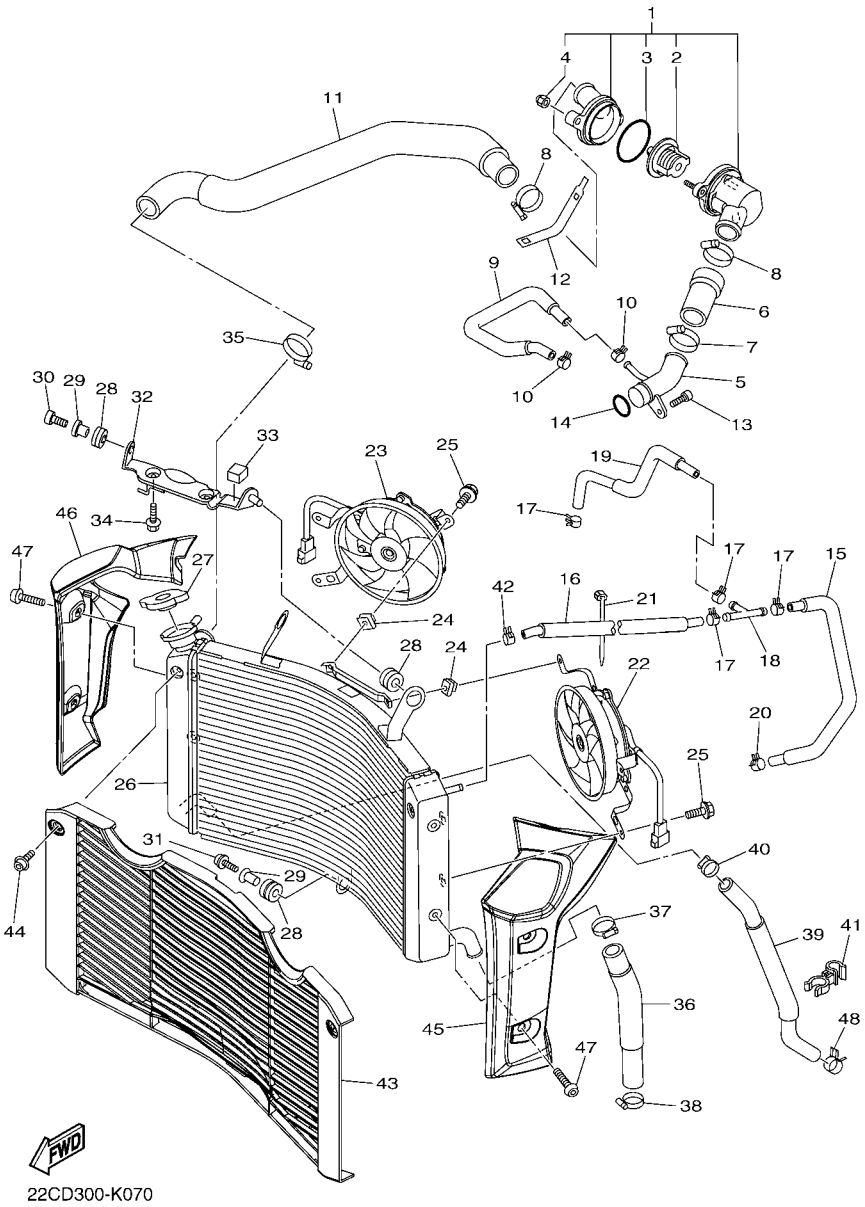

FIG. 7 RADIADOR & MANGUERA

REF. Nº	CODIGO Nº	DESCRIPCION	22CF					OBSERVACIONES
28	90480–15363	TAPON	3					
29	90387–07391	ESPACIADOR	2					
30	90109–06015	PERNO	1					
31	90110–06232	TORNILLO ALLEN	1					
32	22C–12464–00	APOYO DE RADIADOR	1					
33	2D1–2139U–00	AMORTIGUADOR 2	1					
34	95802–06012	TORNILLO DE REBORDE	2					
35	90450–35001	BRIDA, MANGUERA	1					
36	2D1–12551–00	MANGUERA 7	1					
37	90450–35001	BRIDA, MANGUERA	1					
38	90450–32001	BRIDA, MANGUERA	1					
39	39P–12589–00	MANGUERA 6	1					
40	90450–22017	BRIDA, MANGUERA	1					
41	90464–20011	BRIDA	1					
42	90467–11090	PRESILLA	1					
43	2D1–12467–00	CUBIERTA DEL RADIADOR	1					
44	90111–06031	TORNILLO	2					
45	2D1–1240J–00–P0	CUBIERTA DE RADIADOR COMPLETO	1					MBL2
46	2D1–1240K–00–P0	CUBIERTA DE RADIADOR COMPLETO	1					MBL2
47	90111–06078	TORNILLO	4					
48	90467–200A0	PRESILLA	1					

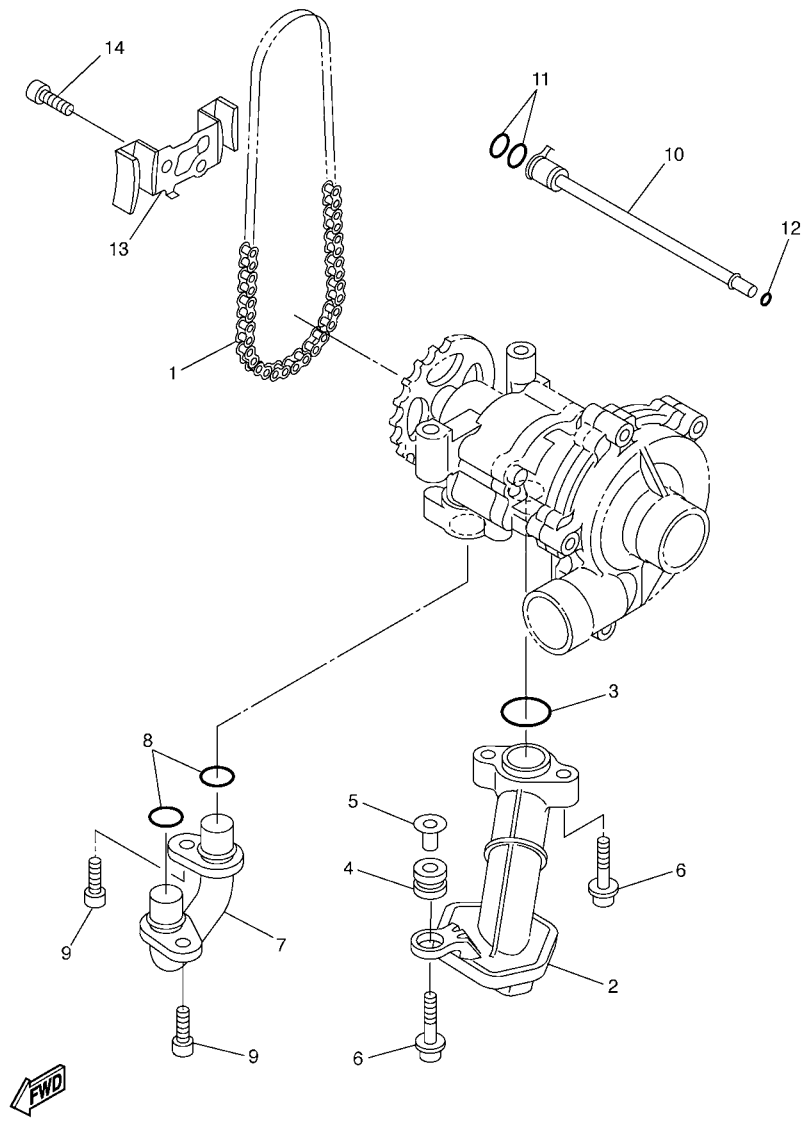

5VY1300-C080

FIG. 8 BOMBA DE ACEITE

REF. Nº	CODIGO Nº	DESCRIPCION	22CF					OBSERVACIONES
1	94580–25078	CADENA (DID25 78LE)	1					
2	5VY–13410–00	CAJA DE FILTRO COMPLETA	1					
3	93210–22298	ANILLO O	1					
4	90480–13010	TAPON	1					
5	5VY–13117–10	COLLAR, DISTANCIA	1					
6	90110–06173	TORNILLO ALLEN	3					
7	5VY–13416–00	TUBO DE ACEITE 1	1					
8	93210–14003	ANILLO O	2					
9	90110–06161	TORNILLO ALLEN	2					
10	5VY–1316E–00	TUBO, DE ENTREGA 5	1					
11	93210–09165	ANILLO O	2					
12	93210–06667	ANILLO O	1					
13	5VY–13898–00	SOSTEN	1					
14	90110–06182	TORNILLO ALLEN	2					

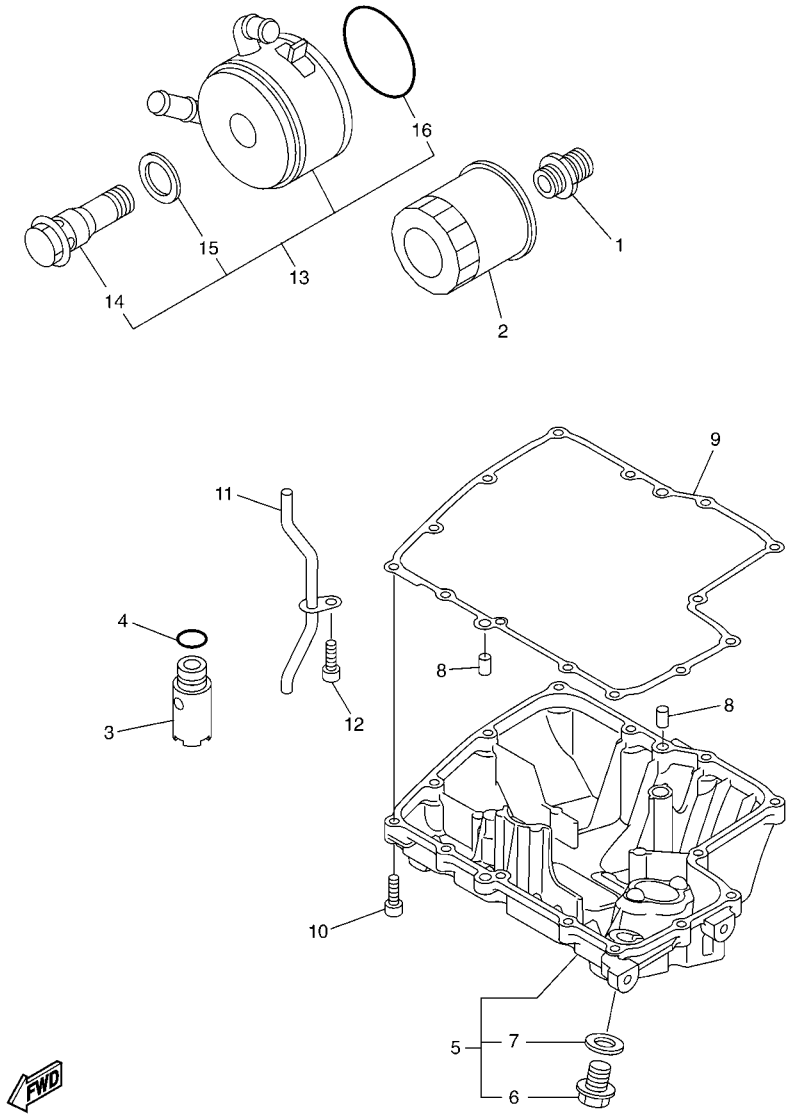

FIG. 9 FILTRO ACEITE

REF. Nº	CODIGO Nº	DESCRIPCION	22CF					OBSERVACIONES
1	90401–20008	PERNO DE UNION	1					
2	5GH–13440–20	ELEMENTO FILTRO DE ACEITE	1					
3	5VY–13490–00	VALVELA DE DESCOMPRESION	1					
4	93210–15566	ANILLO O	1					
5	22C–13400–10	CUBIERTA DE FILTRO COMPLETO	1					
6	90340–14132	.TORNILLO, DE DRENAJE	1					
7	214–11198–01	.EMPAQUE	1					
8	99530–08012	PASADOR, DE ESPIGA	2					
9	4C8–13414–00	EMPAQUE DE TAPA FILTRO	1					
10	91312–06025	TORNILLO	14					
11	5VY–13161–00	TUBO CONDUCTOR 1	1					
12	90110–06161	TORNILLO ALLEN	1					
13	5VY–13470–00	ENFRIADOR DE ACEITE COMPLETO	1					
14	5EB–12822–00	.PERNO DE UNION	1					
15	5EB–13475–00	.EMPAQUE	1					
16	5JW–13473–00	.ANILLO O	1					

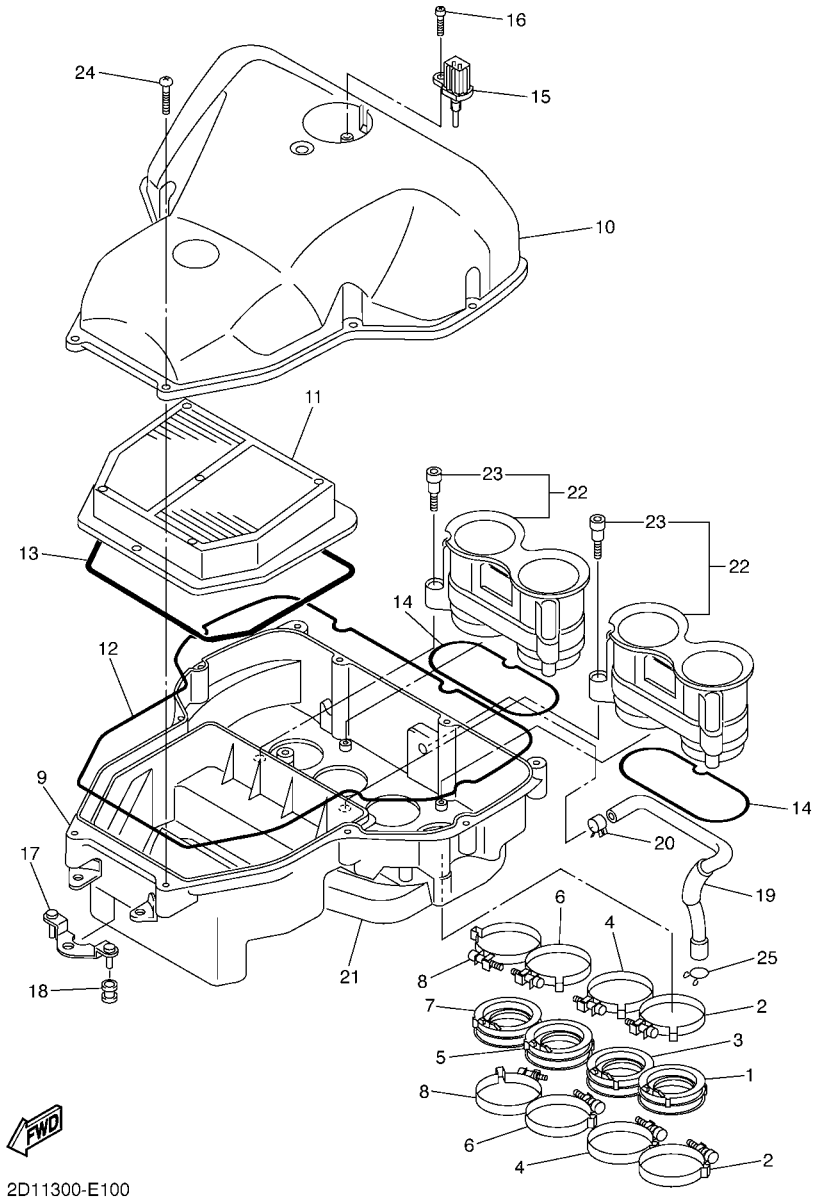

FIG. 10 ADMISION

REF. Nº	CODIGO Nº	DESCRIPCION	22CF					OBSERVACIONES
1	5VY–13595–00	TOBERA	1					
2	90450–62002	BRIDA, MANGUERA	2					
3	5VY–13596–00	TOBERA DE CARBURADOR 2	1					
4	90450–62002	BRIDA, MANGUERA	2					
5	5VY–13597–00	JUNTA, DE CARBURADOR 3	1					
6	90450–62002	BRIDA, MANGUERA	2					
7	5VY–13598–00	COJINETE DE RODILLOS	1					
8	90450–62002	BRIDA, MANGUERA	2					
9	2D1–14411–00	CAJA FILTRO DEL AIRE 1	1					
10	2D1–14421–00	CAJA FILTRO DEL AIRE 2	1					
11	2D1–14451–00	ELEMENTO DEL FILTRO DEL AIRE	1					
12	2D1–14452–00	SELLO	1					
13	2D1–14462–00	SELLO	1					
14	5VY–14457–00	SELLO	2					
15	8FP–85886–00	SENSOR	1					
16	97702–50520	TORNILLO ROSCA HEMBRA	1					
17	2D1–14498–00	SOPORTE 1	1					
18	90480–08264	TAPON	2					
19	2D1–15393–00	TUBO, RESPIRADERO2	1					
20	90467–14171	PRESILLA	1					
21	2D1–14409–00	AMORTIGUADOR	1					
22	2D1–1440B–00	UNION COMPLETO	2					
23	90109–05005	.PERNO	3					
24	97702–50025	TORNILLO ROSCA HEMBRA	11					
25	90467–14015	PRESILLA	1					

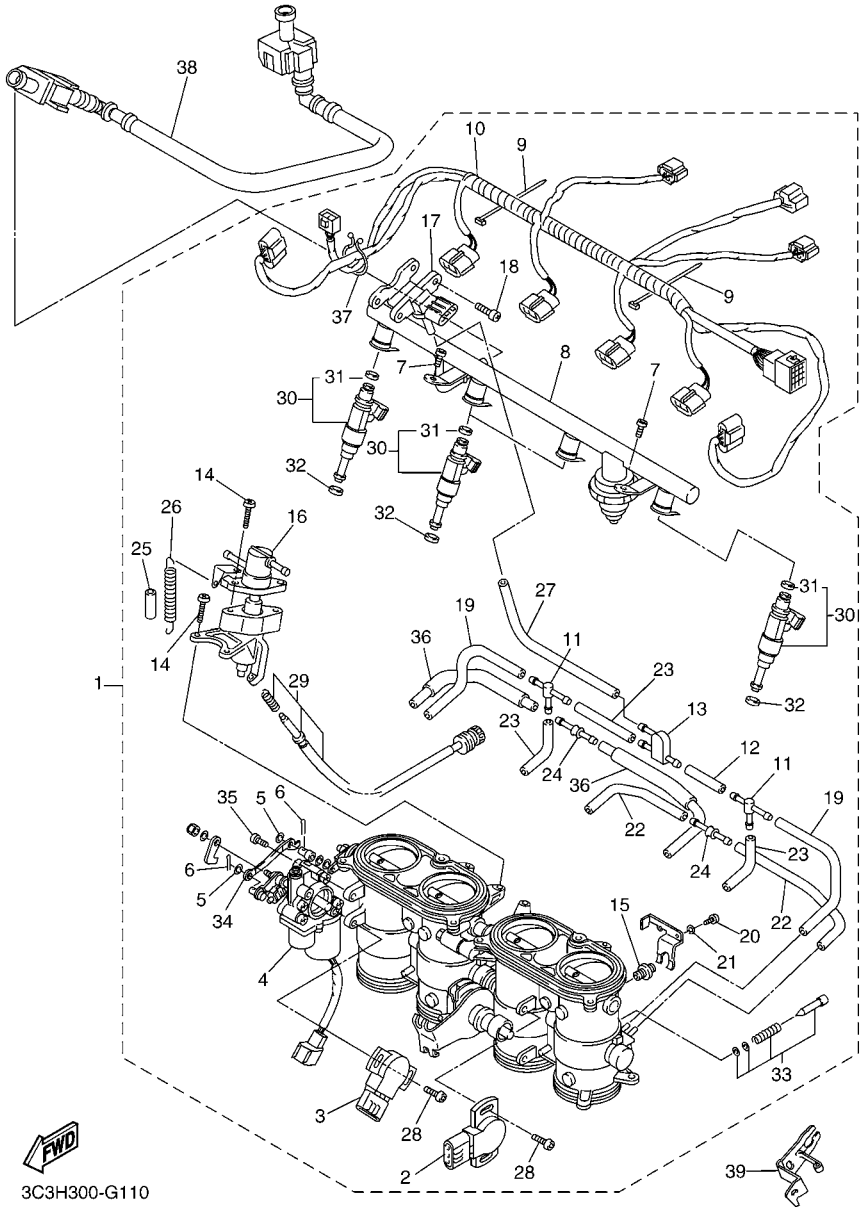

FIG. 11 ADMISION 2

REF. Nº	CODIGO Nº	DESCRIPCION	22CF					OBSERVACIONES
1	2D1–13750–20	CAJA DE ACELERADOR COMPL.	1					
2	2D1–85885–00	.TERMICA SENSORIO	1					
3	5FL–85885–10	.TERMICA SENSORIO	1					
4	2D1–85870–00	.MOTOR ENGRANADO 2	1					
5	22U–14952–00	.ARANDELA	2					
6	91492–12010	.PASADOR DE CHAVETA	2					
7	98502–06012	.TORNILLO	2					
8	2D1–13160–00	.TUBO DE LLEGADA CONJUNTO 1	1					
9	4KM–14137–00	.PRESILLA	5					
10	2D1–82386–00	.EXTENSION, ARNES DE CABLES	1					
11	68V–24376–00	.TUBO DE UNION 1	2					
12	5JW–14396–00	.TUBO	1					
13	3XV–14251–00	.NIPLE	1					
14	98502–05014	.TORNILLO	4					
15	5VY–14171–00	.EMBOLO DE ARRANQUE	2					
16	5VY–14204–00	.CAJA, DE ARRANQUE	1					
17	1C7–82380–00	.SENSOR DE PRESION	1					
18	92502–06010	.TORNILLO CABEZA CRUZADA	2					
19	5FL–14349–10	.TUBO	2					
20	98507–03016	.TORNILLO DE CABEZA PLANA	4					
21	92990–03100	.ARANDELA PLANA	4					
22	5PW–14349–00	.TUBO	2					
23	5PS–14987–00	.TUBO	3					
24	5PW–14251–00	.NIPLE	2					
25	5DM–14936–00	.ASIENTO DE RESORTE	1					
26	5JW–14589–00	.RESORTE	1					
27	5SL–14349–00	.TUBO	1					

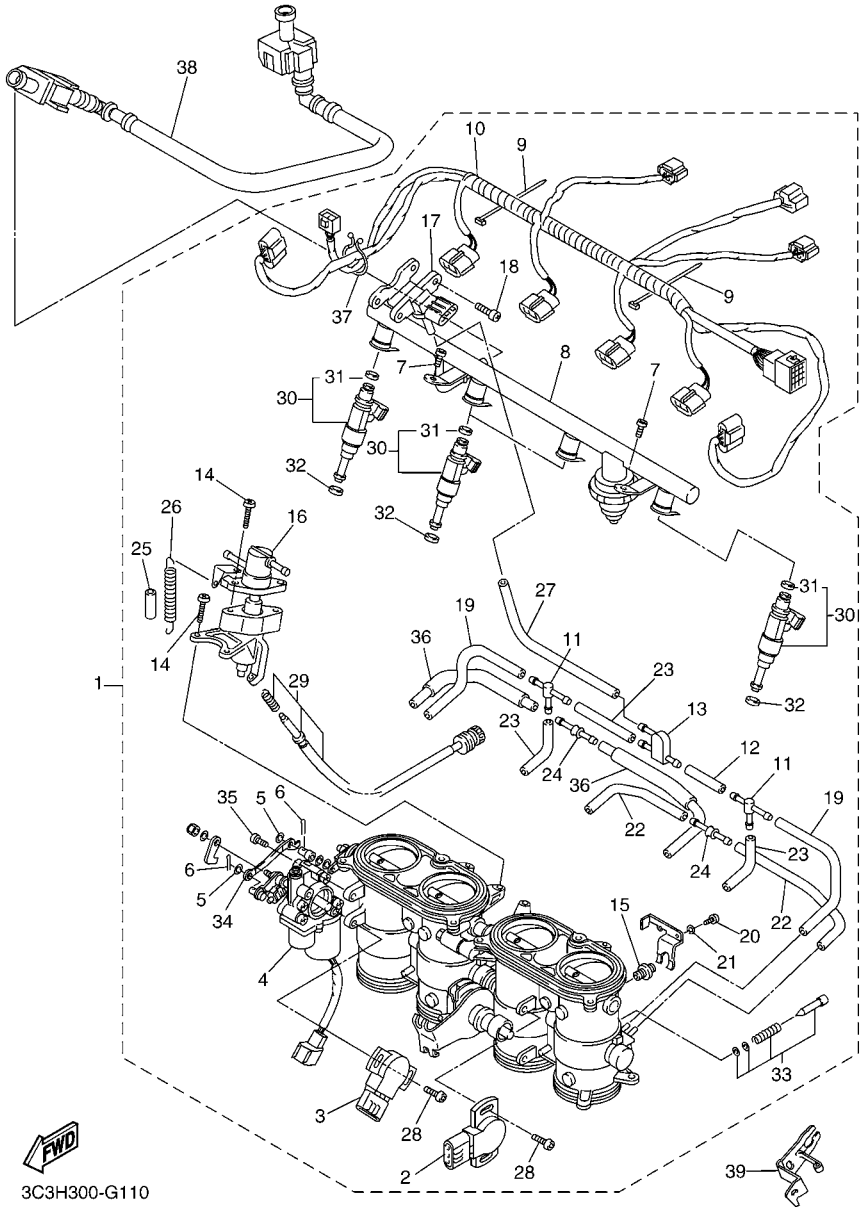

FIG. 11 ADMISION 2

REF. Nº	CODIGO Nº	DESCRIPCION	22CF					OBSERVACIONES
28	8CC–14216–10	.TORNILLO	4					
29	5PW–14103–00	.CJTO. TORNILLO DEL RALENTI	1					
30	5VY–13761–00	.INYECTOR	4					
31	5PS–14147–00	..ANILLO O	1					
32	8FP–13556–00	.ANILLO PROTECTOR	4					
33	5JW–14104–00	.CJTO. TORNNILLO DE AIRE	2					
34	5VY–14905–00	.PALANCA DE ARRANQUE	1					
35	98507–06020	.TORNILLO DE CABEZA CON PLANA	2					
36	5VY–13543–00	.TUBO DE AIRE	2					
37	90464–30040	.BRIDA	1					
38	2D1–13971–00	ANILLO DE ESPACIADOR	1					
39	2D1–14413–01	SOPORTE	1					

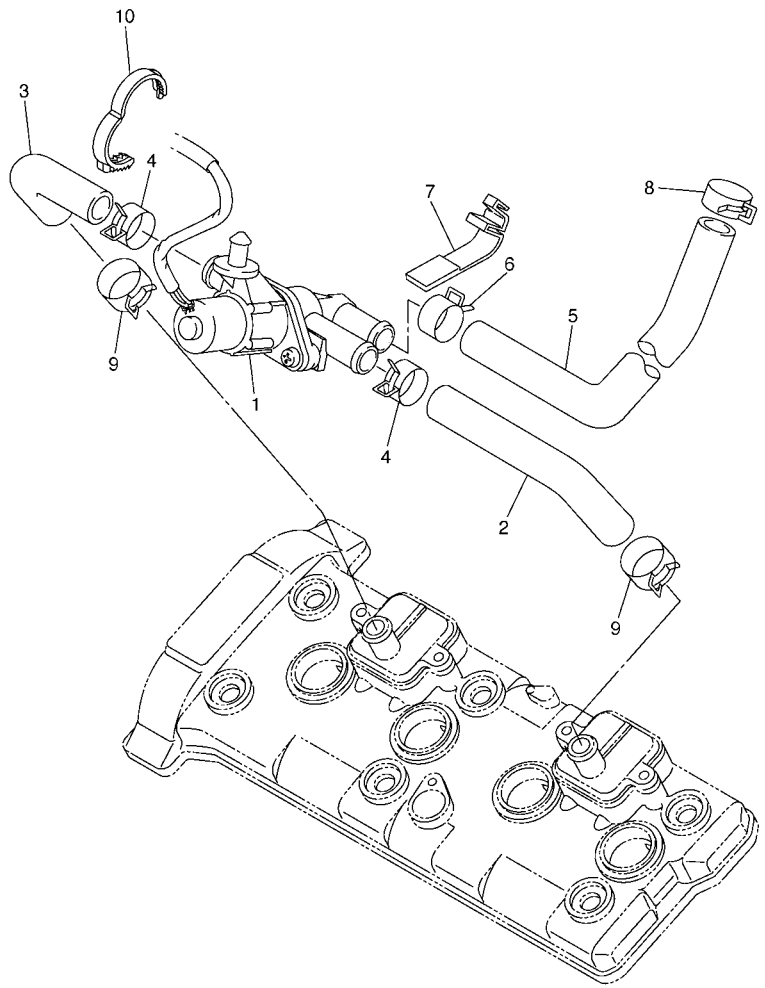

2D11300-E120

FIG. 12 SYSTEMA DE INDUCCION DE AIRE

REF. Nº	CODIGO Nº	DESCRIPCION	22CF					OBSERVACIONES
1	2D1–14840–00	VALVULA, CORTE DE AIRE	1					
2	5VY–14881–00	TUBO 1	1					
3	5VY–14882–00	TUBO 2	1					
4	90467–18172	PRESILLA	2					
5	5VY–14883–00	TUBO 3	1					
6	90467–18172	PRESILLA	1					
7	5JW–14723–00	CUBIERTA	2					
8	90467–17128	PRESILLA	1					
9	90467–180A0	PRESILLA	2					
10	90464–28003	BRIDA	1					

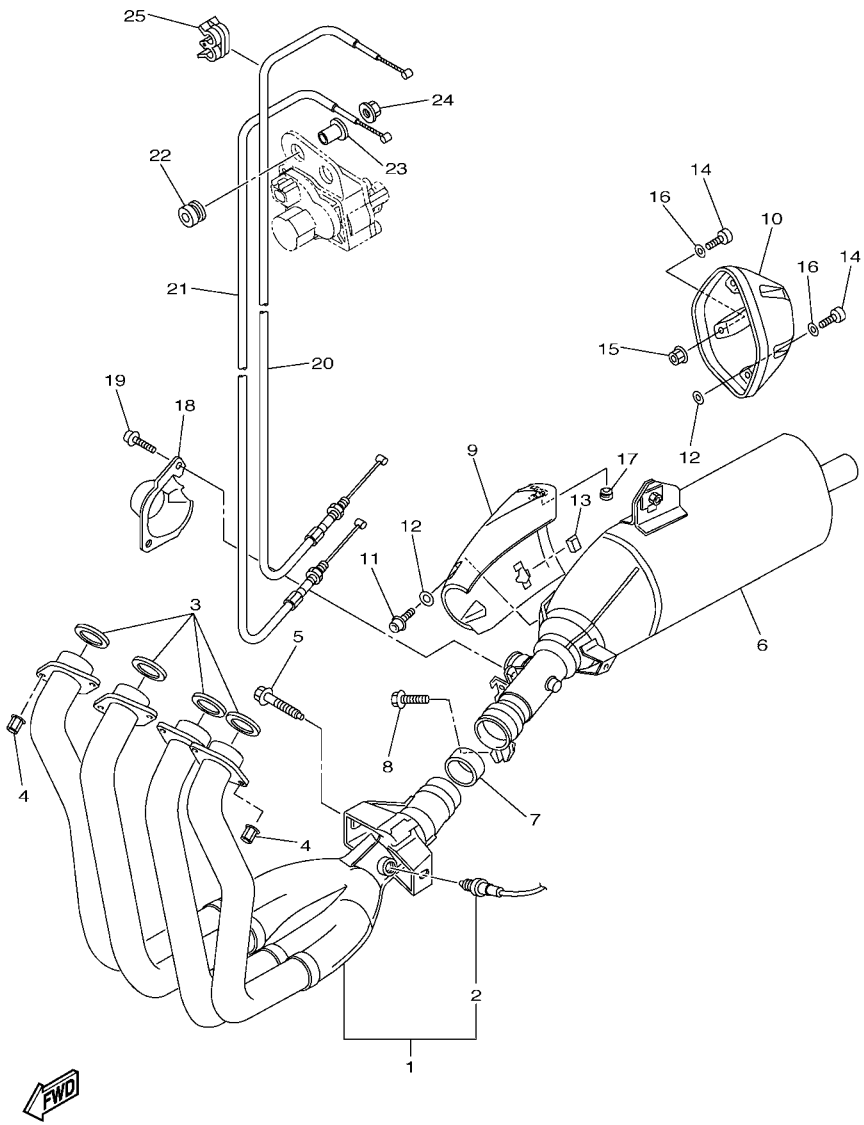

1CA5300-J130

FIG. 13 DESCARGA

REF. Nº	CODIGO Nº	DESCRIPCION	22CF					OBSERVACIONES
1	2D1–14602–10	TUBO DE ESPAPE COMPLETO	1					
2	2D1–8592A–00	.SENSOR	1					
3	4FM–14613–00	JUNTA, TUBO DE ESCAPE	4					
4	90179–08410	TUERCA	8					
5	90109–08170	PERNO	2					
6	2D1–14703–10	SILENCIADOR COMPL. 1	1					
7	5VY–14755–00	EMPAQUE DE SILENCIADOR	1					
8	95814–08030	TORNILLO	1					
9	2D1–14718–20	PROTECTOR DE SILENCIADOR 1	1					
10	2D1–14799–10	TAPA	1					
11	90111–06060	TORNILLO	2					
12	90201–05017	ARANDELA PLANA	6					
13	3MA–24181–00	AMORTIGUADOR DE MONTAJE 1	2					
14	91380–06014	PERNO	5					
15	95702–06500	TUERCA DE BRIDA	1					
16	92990–06600	ARANDELA PLANA	5					
17	2D1–14737–00	AMORTIGUADOR DE SILENCIADOR	1					
18	2D1–14826–00	PROTECTOR DE VALVULA DE ESCAPE	1					
19	90110–06110	TORNILLO ALLEN	2					
20	2D1–1133E–01	CABLE DE POLEA	1					
21	2D1–1133F–11	CABLE DE POLEA	1					
22	90480–14604	TAPON	2					
23	90387–06M60	ESPACIADOR	1					
24	95702–06500	TUERCA DE BRIDA	1					
25	90464–04001	BRIDA	1					

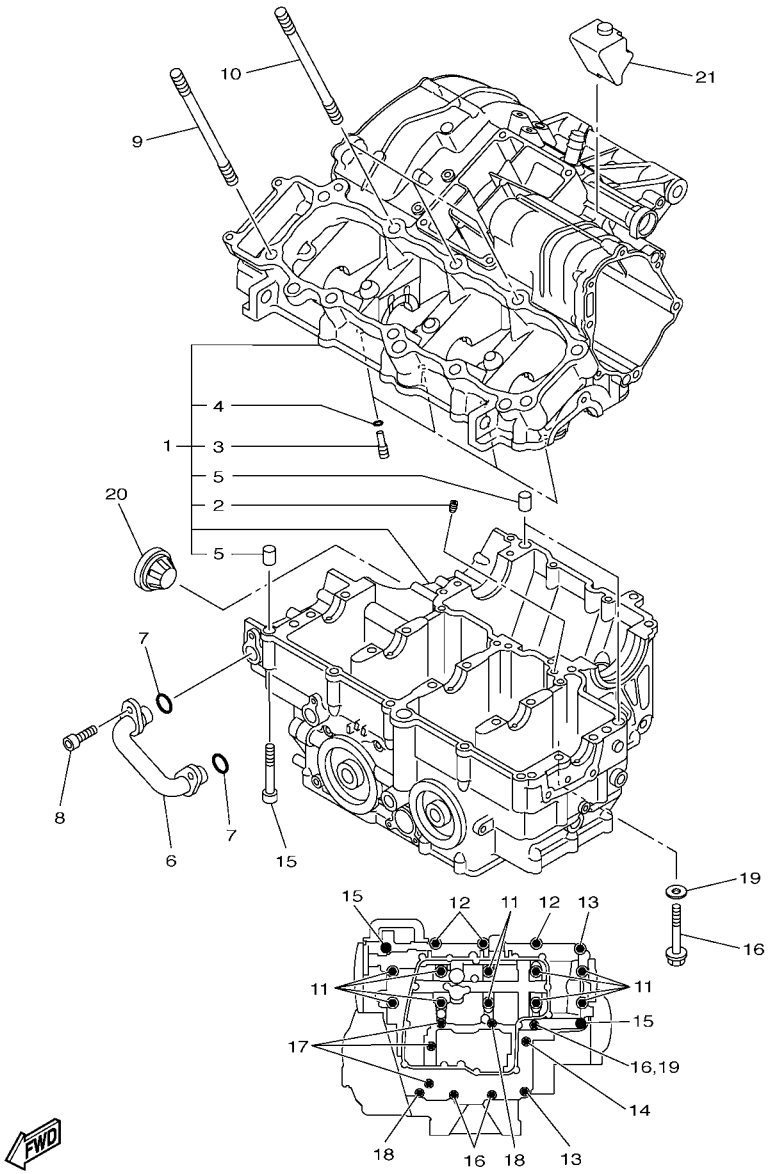

1EC1300-K140

FIG. 14 CARTER

REF. Nº	CODIGO Nº	DESCRIPCION	22CF					OBSERVACIONES
1	4C8–15100–19	CARTER COMPLETO	1					
2	4XV–15138–00	.BOQUILLA 1	1					
3	5EB–15155–00	.BOQUILLA 3	4					
4	93210–04092	.ANILLO O	4					
5	99530–10014	.PASADOR, DE ESPIGA	3					
6	5VY–13418–11	TUBO DE ACEITE 2	1					
7	93210–14003	ANILLO O	2					
8	90110–06161	TORNILLO ALLEN	2					
9	90116–10032	ESPARRAGO	7					
10	90116–10023	ESPARRAGO	3					
11	90119–09012	TORNILLO CON ARANDELA	10					
12	95812–08050	TORNILLO DE REBORDE	3					
13	95812–08060	TORNILLO DE REBORDE	2					
14	90105–08101	TORNILLO	1					
15	90109–06100	PERNO	2					
16	95812–06060	TORNILLO DE REBORDE	3					
17	95812–06070	TORNILLO DE REBORDE	3					
18	95812–06050	TORNILLO DE REBORDE	2					
19	90430–06166	JUNTA	1					
20	5PW–15361–00	MEDIDOR DE NIVEL	1					
21	5VY–15316–00	AMORTIGUADOR 1	1					

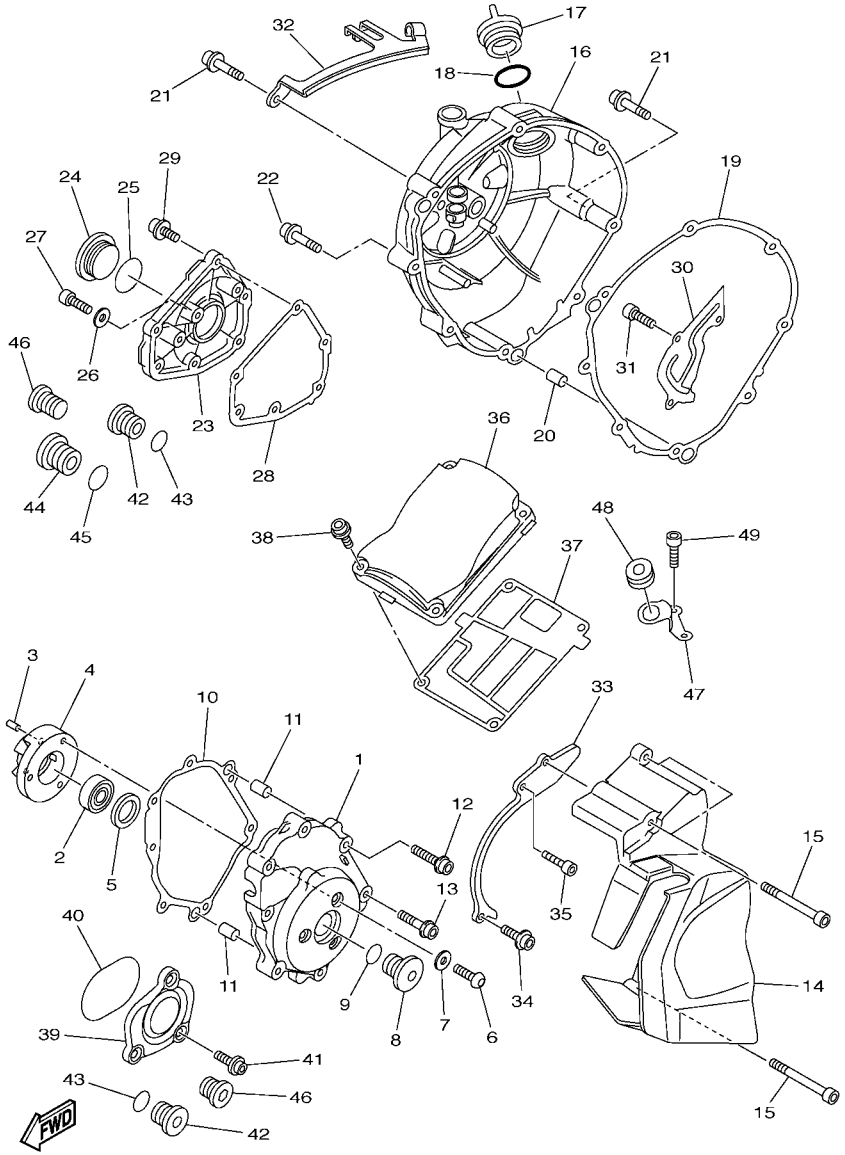

1EC1300-K150

FIG. 15 CUBIERTA DE CARTER 1

REF. Nº	CODIGO Nº	DESCRIPCION	22CF					OBSERVACIONES
1	5VY–15411–00	CUBIERTA DE CARTER 1	1					
2	93306–20124	COJINETE	1					
3	93605–10108	PASADOR DE CLAVIJA	2					
4	5VY–15164–00	CAJA DE COJINETE 2	1					
5	5VY–15542–00	COLLAR 2	1					
6	90149–06064	TORNILLO DE REGLAJE	3					
7	90201–06431	ARANDELA PLANA	3					
8	5PX–15189–00	TAPON	1					
9	93210–22382	ANILLO O	1					
10	2D1–15451–10	EMPAQ DE CUBIERTA DE CARTER	1					
11	99480–10018	PASADOR	2					
12	90110–06323	TORNILLO ALLEN	4					
13	90110–08099	TORNILLO ALLEN	3					
14	2D1–15418–00	CUBIERTA CAJA DE CADENA	1					
15	90110–06255	TORNILLO ALLEN	3					
16	2D1–15421–00	TAPA DE CARTER DERECHA	1					
17	3F9–15362–10	TAPON DEL NIVEL DE ACEITE	1					
18	93210–27194	ANILLO O	1					
19	4C8–15461–00	JUNTA TAPA CARTER DERECHO 2	1					
20	93610–20189	PASADOR DE CLAVIJA	2					
21	90110–06321	TORNILLO ALLEN	7					
22	90110–06320	TORNILLO ALLEN	1					
23	2D1–15416–00	CUBIERTA DE BOMBA DE ACEITE	1					
24	90340–32004	TORNILLO, DE DRENAJE	1					
25	93210–32172	ANILLO O	1					
26	90430–08143	JUNTA	1					
27	92014–08012	PERNO	1					

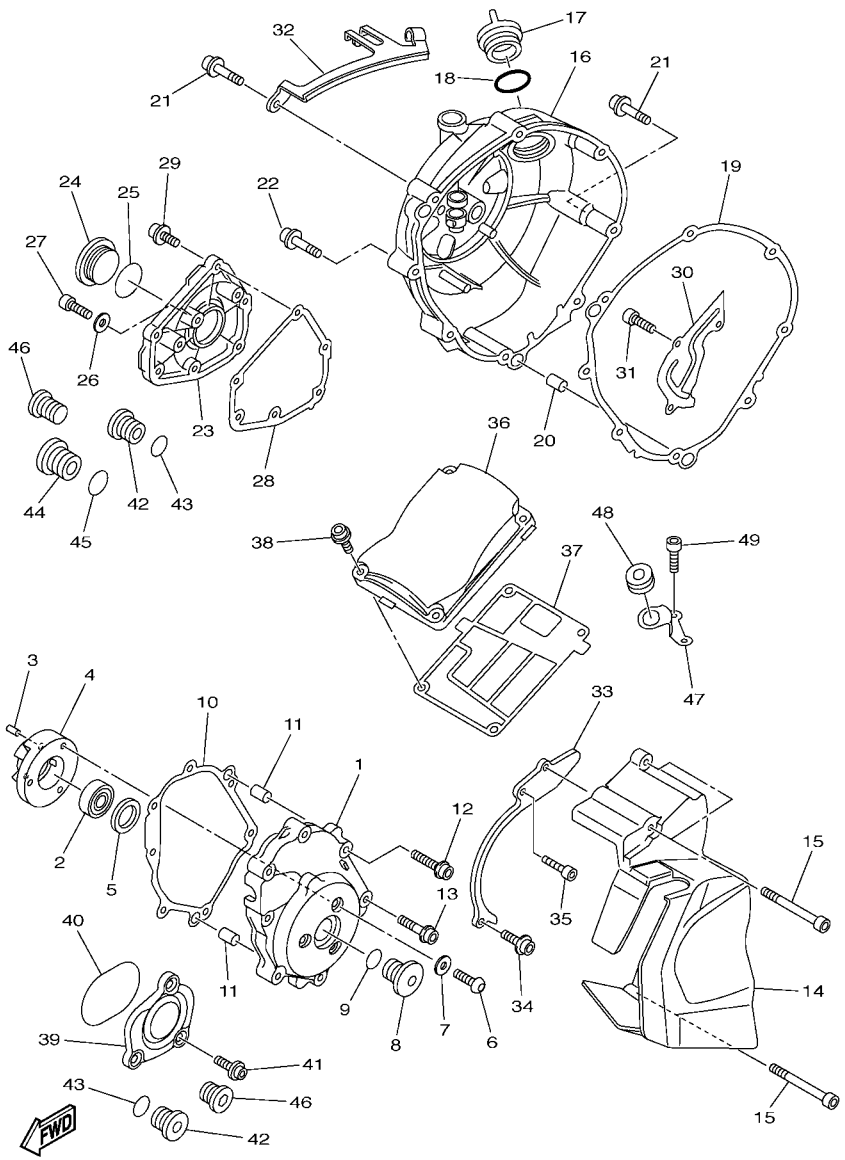

1EC1300-K150

FIG. 15 CUBIERTA DE CARTER 1

REF. Nº	CODIGO Nº	DESCRIPCION	22CF					OBSERVACIONES
28	4C8–15456–00	EMPAQ CUBTA.BOMBA ACEITE 1	1					
29	90110–06331	TORNILLO ALLEN	6					
30	5VY–11165–00	PLACA RESPIRADERO	1					
31	90110–06182	TORNILLO ALLEN	3					
32	2D1–15441–01	SOSTEN DE CABLE DE EMBRAGUE	1					
33	4B1–15113–00	PLACA	1					
34	90110–06277	TORNILLO ALLEN	1					
35	90110–06276	TORNILLO ALLEN	1					
36	2D1–15413–10	CUBIERTA	1					
37	4C8–15462–00	EMPAQ CUBIERTA DE CARTER 3	1					
38	90110–06349	TORNILLO ALLEN	4					
39	4C8–15431–00	CUBIERTA DE CARTER 3	1					
40	93210–57003	ANILLO O	1					
41	90110–06331	TORNILLO ALLEN	3					
42	36Y–15189–00	TAPON	3					
43	93210–16325	ANILLO O	3					
44	4H7–15189–00	TAPON	1					
45	93210–22382	ANILLO O	1					
46	90340–12003	TORNILLO, DE DRENAJE	2					
47	5VY–12443–10	APOYO	1					
48	90480–13014	TAPON	1					
49	91380–06014	PERNO	2					

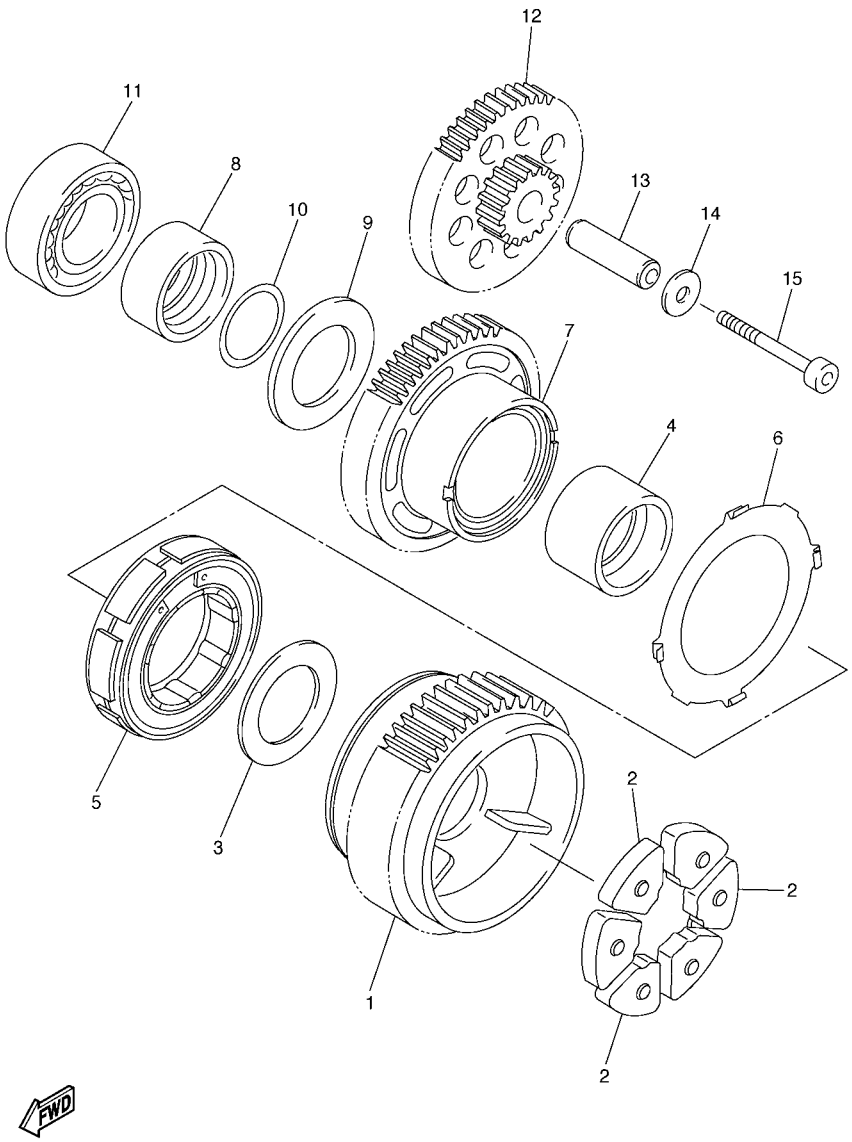

5VY1300-C160

FIG. 16 ARRANQUE

REF. Nº	CODIGO Nº	DESCRIPCION	22CF					OBSERVACIONES
1	2D1–11537–10	ENGRANAJE TRACCION	1					
2	5VY–16155–00	AMORTIGUADOR 1	3					
3	90201–20016	ARANDELA PLANA	1					
4	5VY–11478–00	COLLAR	1					
5	5VY–15570–00	EMBRAGUE DEL ARRANQUE COMPLETA	1					
6	5VY–15586–00	PLACA	1					
7	5VY–15515–00	ENGRANAJE 3	1					
8	5VY–11445–00	ESPACIADOR	1					
9	90201–20017	ARANDELA PLANA	1					
10	93210–18397	ANILLO O	1					
11	93306–20230	COJINETE	1					
12	5VY–15517–00	ENGRENAJE POSICION 2DA	1					
13	5VY–15521–00	EJE 1	1					
14	90201–06589	ARANDELA PLANA	1					
15	90110–06176	TORNILLO ALLEN	1					

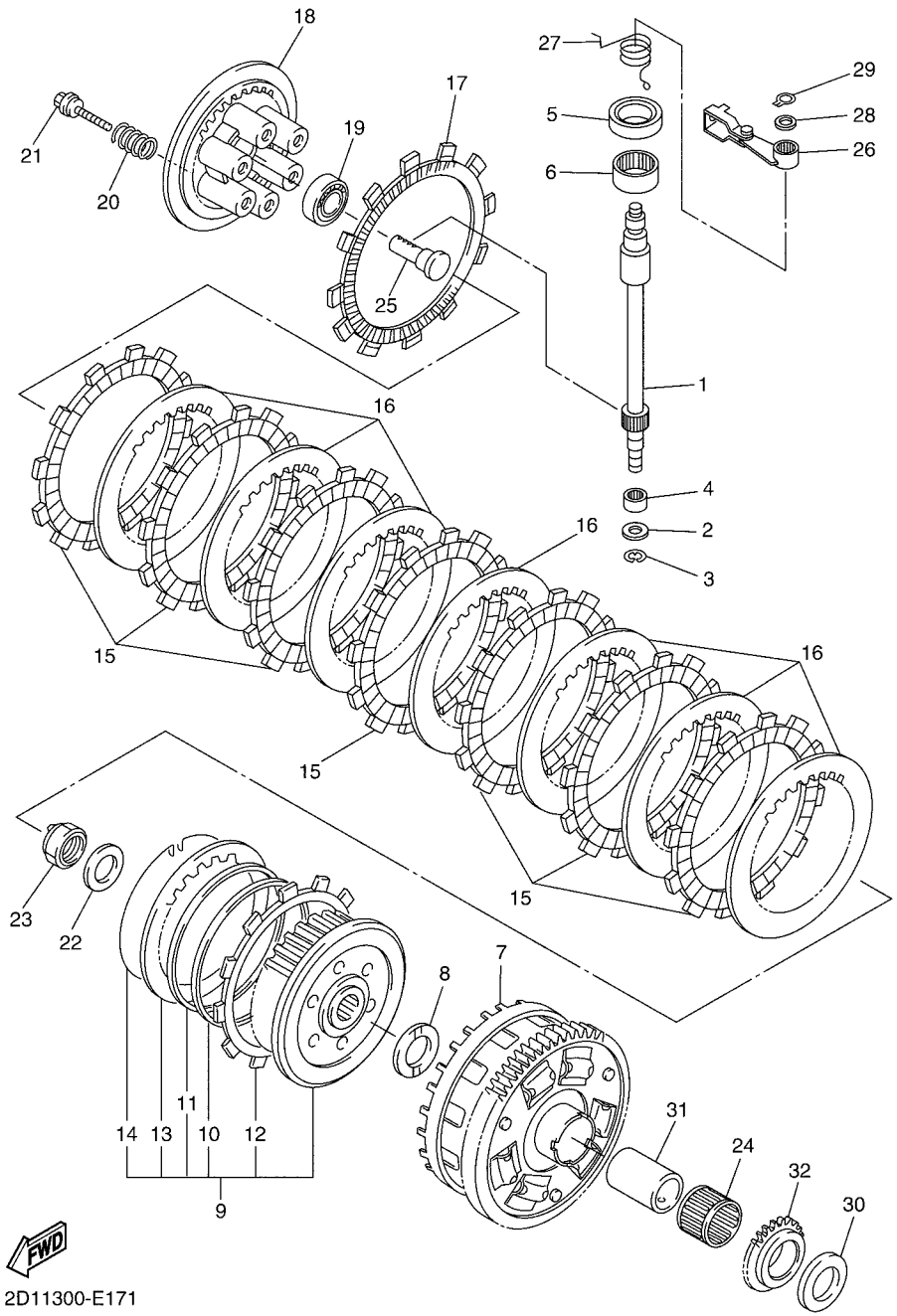

FIG. 17 EMBRAGUE

REF. Nº	CODIGO Nº	DESCRIPCION	22CF					OBSERVACIONES
1	2D1–16382–00	EJE DE PALANCA DE EMPUJE	1					
2	92907–08600	ARANDELA	1					
3	99001–07600	PRESILLA REDONDA	1					
4	93317–11096	COJINETE	1					
5	93102–15212	SELLO ACEITE	1					
6	93315–31502	COJINETE DE RODILLOS	1					
7	5VY–16150–00	CAMPANA DE EMBRAGUE	1					
8	5VY–16154–00	ARANDELA, DE EMPUJE 1	1					
9	2D1–16370–00	COPA DE EMBRAGUE COMPLETA	1					
10	5VY–16384–00	.PLACA DE ASIENTO	1					
11	5VY–16383–00	.RESORTE.,COJIN	1					
12	5VY–16331–00	.DISCO, DE FRICCION 2	1					
13	5VY–16325–00	.DISCO, DE EMBRAGUE	1					
14	4X7–16385–00	.SET OF ANILLO	1					
15	5VY–16321–00	PLACA DE FRICCION	7					
16	5VY–16325–00	DISCO, DE EMBRAGUE	7					
17	5VY–16330–00	PLACA DE FRICCION 2	1					
18	5VY–16351–00	PLATO DE PRESION	1					
19	93306–00304	COJINETE	1					
20	90501–230A0	RESORTE DE COMPRESION	6					
21	90119–06257	TORNILLO CON ARANDELA	6					
22	90208–20001	ARANDELA DE RESORTE CONICO	1					
23	90179–20007	TUERCA	1					
24	93310–232R9	COJINETE DE RODILLOS	1					
25	4XV–16356–01	VARILLA DE EMPUJE 1	1					
26	5VY–16340–00	PALANCA DE EMPUJE COMPLETA	1					
27	90508–18051	RESORTE DE TORSION	1					

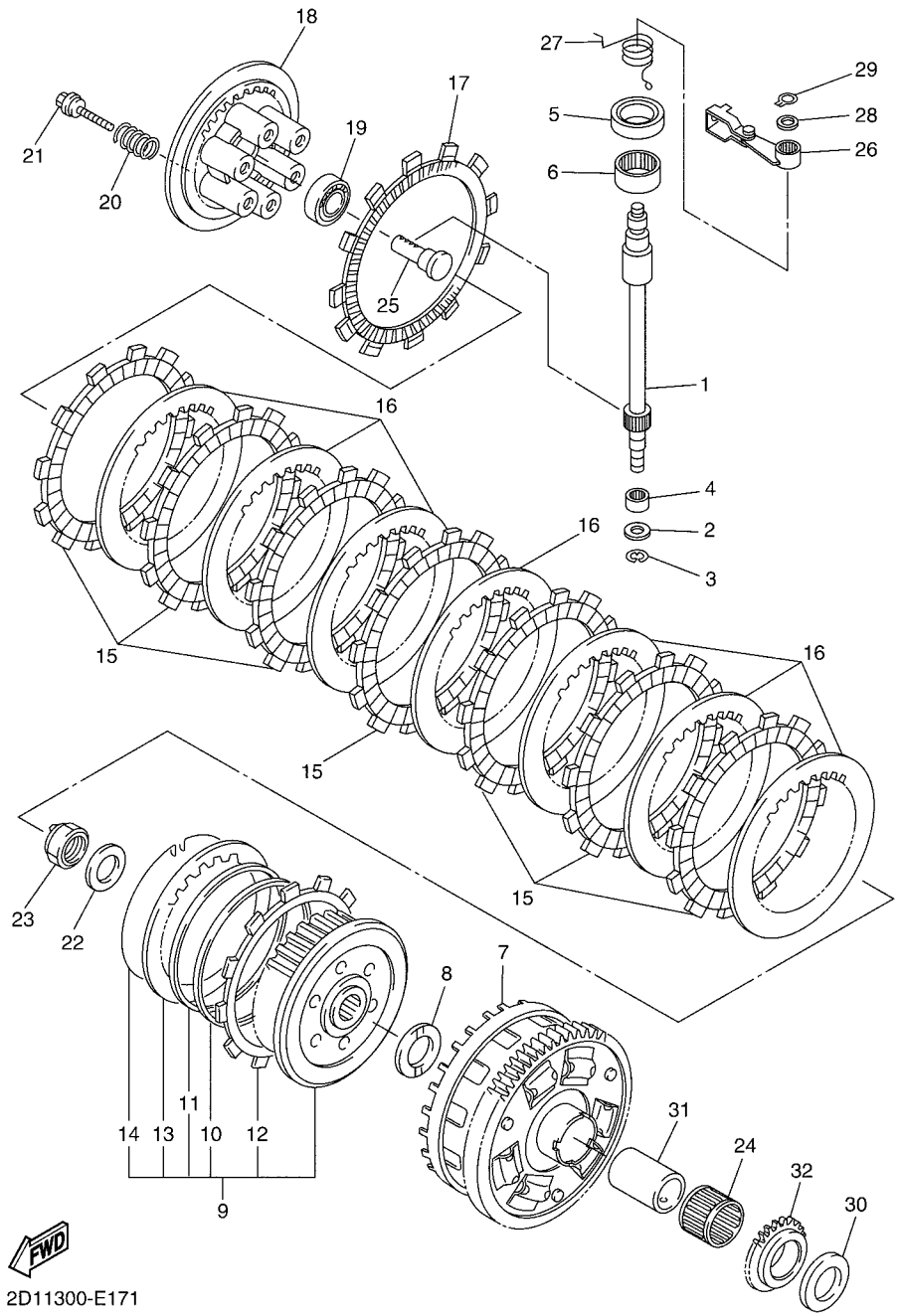

FIG. 17 EMBRAGUE

REF. Nº	CODIGO Nº	DESCRIPCION	22CF					OBSERVACIONES
28	90201–10029	ARANDELA PLANA	1					
29	99009–10400	PRESILLA REDONDA	1					
30	5VY–16164–00	PLACA DE EMPUJE 2	1					
31	5VY–16181–00	SEPARADOR	1					
32	5VY–13354–00	CATALINA	1					

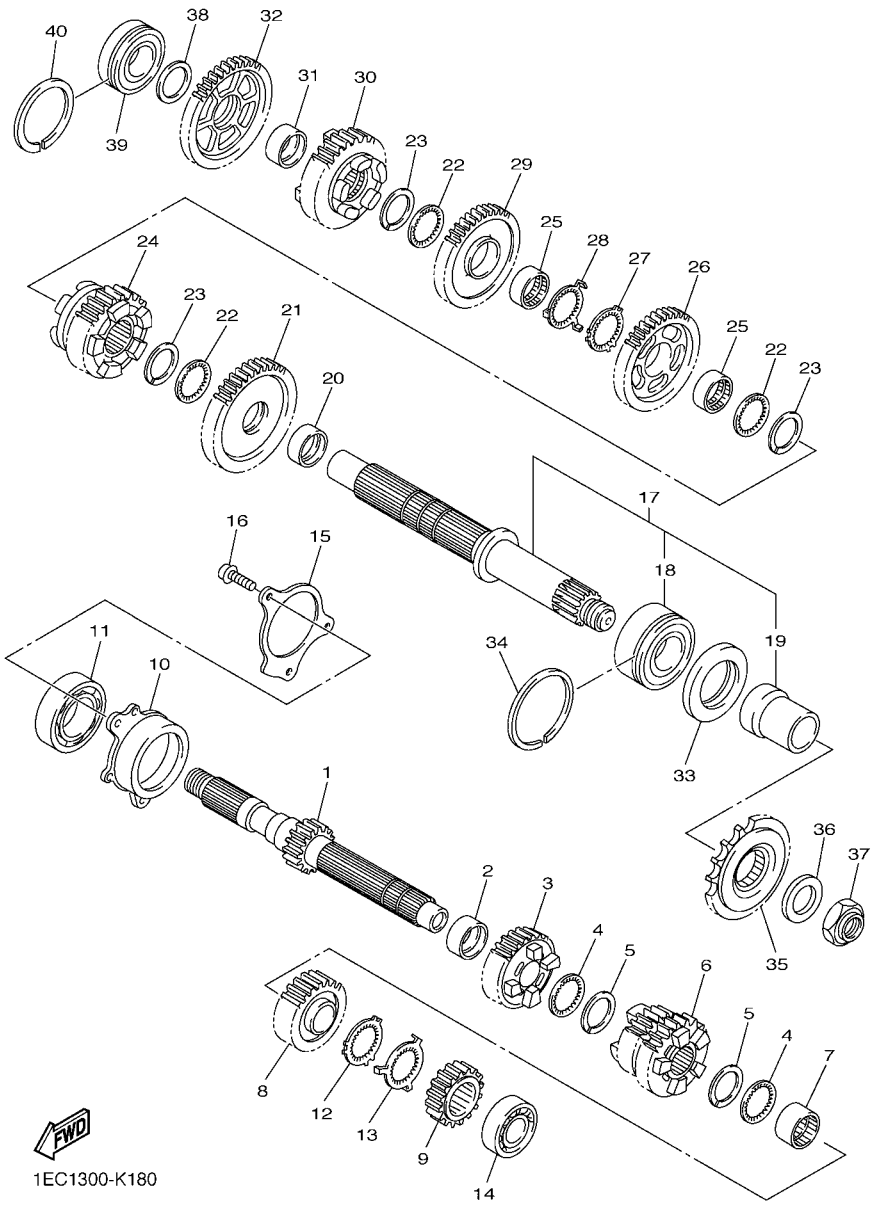

FIG. 18 TRANSMISION

REF. Nº	CODIGO Nº	DESCRIPCION	22CF					OBSERVACIONES
1	2D1–17411–00	EJE PRIMARIO (15T)	1					
2	90387–28003	ESPACIADOR	1					
3	2D1–17151–00	ENGRANAJE PINON DE 5TA (20T)	1					
4	90209–25011	ARANDELA DE SEPARACION	2					
5	93440–28184	SEGURO	2					
6	2D1–17131–00	ENGRANAJE PINON DE 3RA(21/23T)	1					
7	90387–25007	ESPACIADOR	1					
8	2D1–17161–00	ENGRANAJE PINON 6TA (24T)	1					
9	2D1–17121–10	ENGRANAJE DE PINON DE 2DA(16T)	1					
10	5VY–15163–00	CAJA DE COJINETE 1	1					
11	93306–20652	COJINETE	1					
12	90214–25004	ARANDELA DE POSICION	1					
13	90214–25003	ARANDELA DE POSICION	1					
14	93306–27209	COJINETE	1					
15	5VY–17446–00	PLACA	1					
16	90110–06164	TORNILLO ALLEN	3					
17	4C8–17402–00	EJE DE TRACCION COMPLETO	1					
18	93305–20605	.COJINETE	1					
19	5VY–17442–00	.COLLAR DISTANCIADOR	1					
20	90387–31003	ESPACIADOR	1					
21	2D1–17221–00	ENGRANAJE RUEDA DE 2DA (33T)	1					
22	90209–28008	ARANDELA DE SEPARACION	3					
23	93440–31187	SEGURO	3					
24	2D1–17261–00	ENGRANAJE DE RUEDA 6TA (29T)	1					
25	90387–28004	ESPACIADOR	2					
26	5VY–17241–00	ENGRANAJE DE RUEDA 4TA (35T)	1					
27	90214–29002	ARANDELA DE POSICION	1					

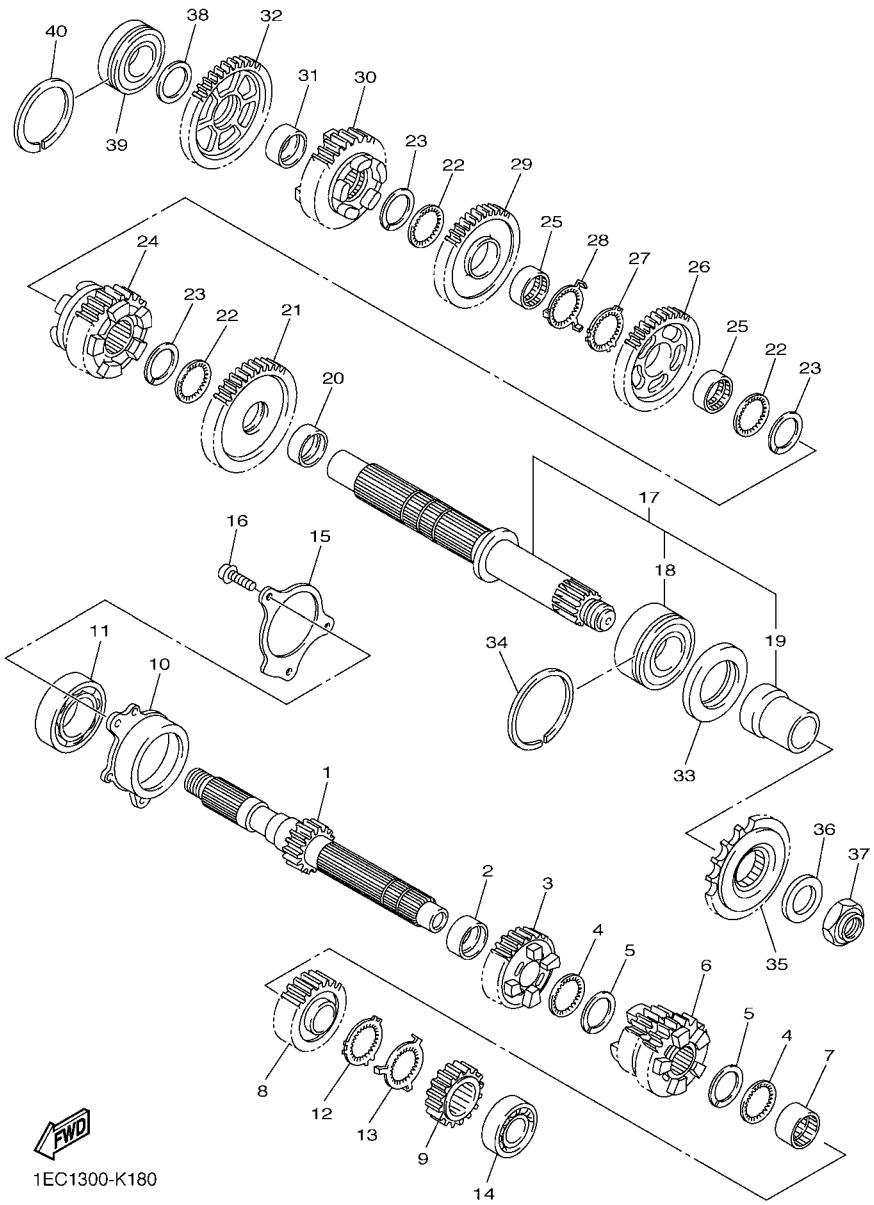

FIG. 18 TRANSMISION

REF. Nº	CODIGO Nº	DESCRIPCION	22CF					OBSERVACIONES
28	90214–28002	ARANDELA DE POSICION	1					
29	5VY–17231–00	ENGRANAJE RUEDA DE 3RA (37T)	1					
30	2D1–17251–01	ENGRANAJE DE RUEDA 5TA (27T)	1					
31	90387–25008	ESPACIADOR	1					
32	5VY–17211–00	ENGRANAJE RUEDA DE 1RA (38T)	1					
33	93102–40330	SELLO ACEITE	1					
34	93440–62032	SEGURO	1					
35	3CV–17460–00	RUEDA DENTADA (17T)	1					
36	90201–22015	ARANDELA PLANA	1					
37	90179–22019	TUERCA	1					
38	90201–257H0	ARANDELA PLANA	1					
39	93306–205A2	COJINETE	1					
40	93440–52009	SEGURO	1					

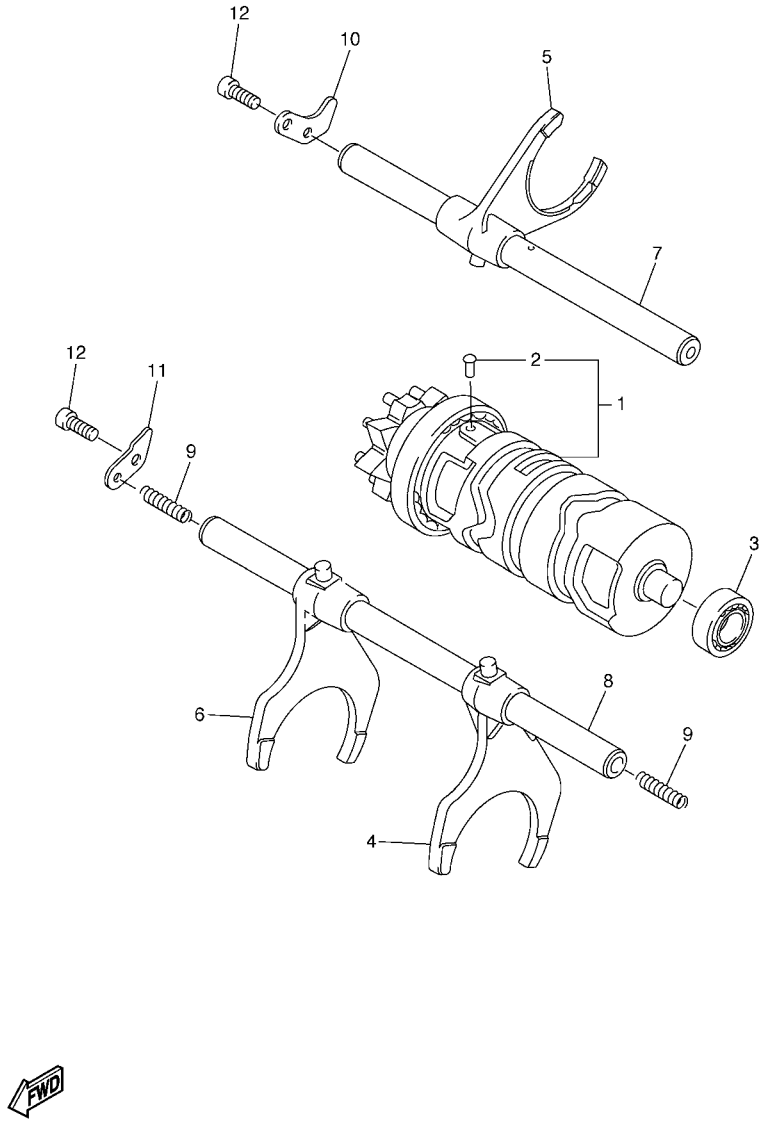

FIG. 19 LEVA DE CAMBIO & HORQUILLA

REF. Nº	CODIGO Nº	DESCRIPCION	22CF					OBSERVACIONES
1	5VY–18540–00	LEVA DEL CAMBIO COMPLETA	1					
2	136–18542–00	.PUNTO MUERTO	1					
3	93306–00106	COJINETE	1					
4	2D1–18511–00	HORQUILLA DEL CAMBIO 1	1					
5	2D1–18512–00	HORQUILLA DEL CAMBIO 2	1					
6	5VY–18513–01	HORQUILLA DEL CAMBIO 3	1					
7	5VY–18531–00	BARRA GUIA HORQ. CAMBIO 1	1					
8	5VY–18535–00	BARRA GUIA HORQ .CAMBIO 2	1					
9	90501–064L1	RESORTE DE COMPRESION	2					
10	5VY–18536–00	TOPE DE PALANCA SELECTOR	1					
11	5VY–18562–00	PLACA DE TOPE 2	1					
12	90110–06182	TORNILLO ALLEN	2					

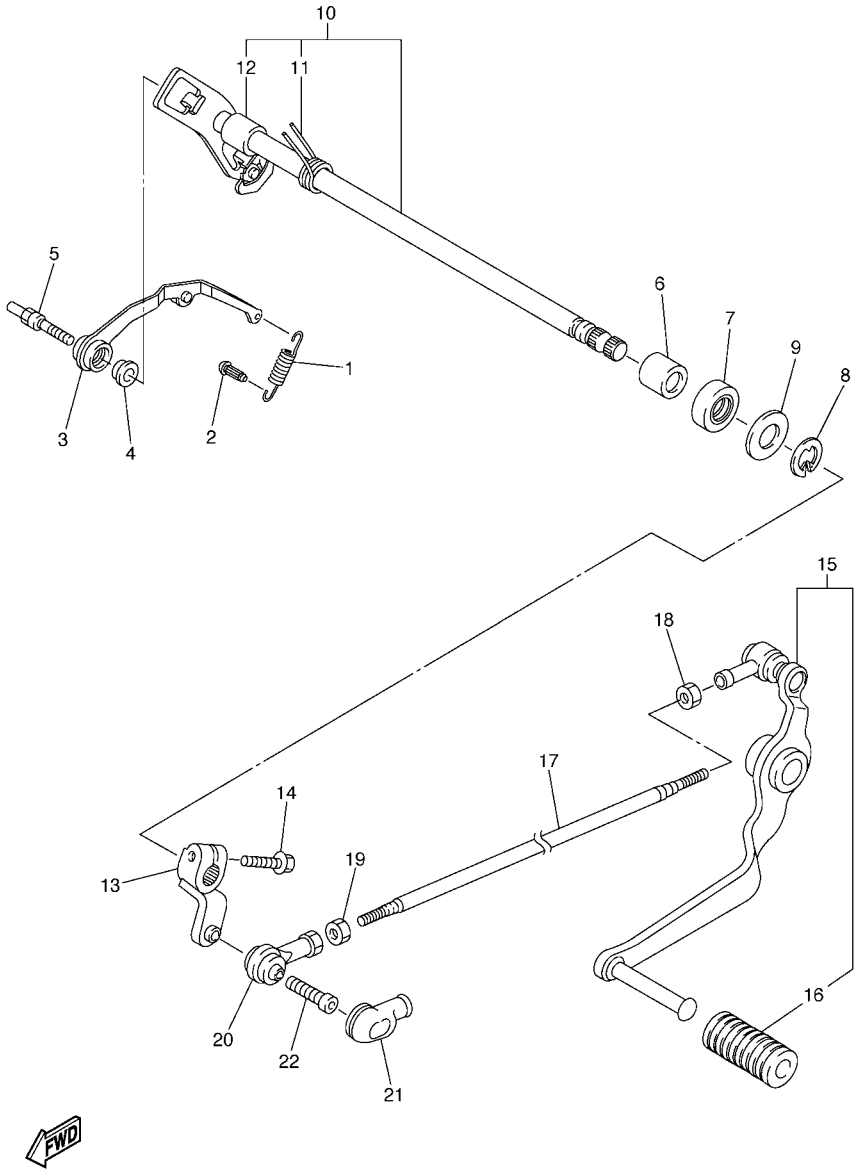

FIG. 20 EJE DE CAMBIO & PEDAL

REF. Nº	CODIGO Nº	DESCRIPCION	22CF					OBSERVACIONES
1	5VY–18144–00	GANCHO DE RESORTE	1					
2	132–16346–00	GANCHO DE RESORTE	1					
3	5VY–18140–00	PALANCA DE TOPE COMPLETA	1					
4	90387–0804S	ESPACIADOR	1					
5	5VY–18127–10	PASADOR DE PALANCA	1					
6	93317–11295	COJINETE	2					
7	93102–12106	SELLO ACEITE (SD 12-22-5 HS)	1					
8	99002–10600	PRESILLA REDONDA	1					
9	90201–12575	ARANDELA PLANA	2					
10	2D1–18101–00	EJE SELECTOR COMPLETO	1					
11	90508–32020	.RESORTE DE TORSION	1					
12	90387–1211D	.ESPACIADOR	1					
13	2D1–18112–00	BRAZO DEL CAMBIO	1					
14	95022–06020	PERNO, DE BRIDA	1					
15	2D1–18110–00	PEDAL DE CAMBIO COMPLETO	1					
16	5EB–18113–00	.FUNDA DEL PEDAL DEL CAMBIO	1					
17	2D1–18115–00	VARILLA DEL CAMBIO	1					
18	90170–06228	TUERCA	1					
19	95304–06700	TUERCA	1					
20	5VX–18116–00	VARILLA DE CONECTOR 1	1					
21	5VX–18154–00	CUBIERTA GUARDAPOLVO	1					
22	90111–06098	TORNILLO	1					

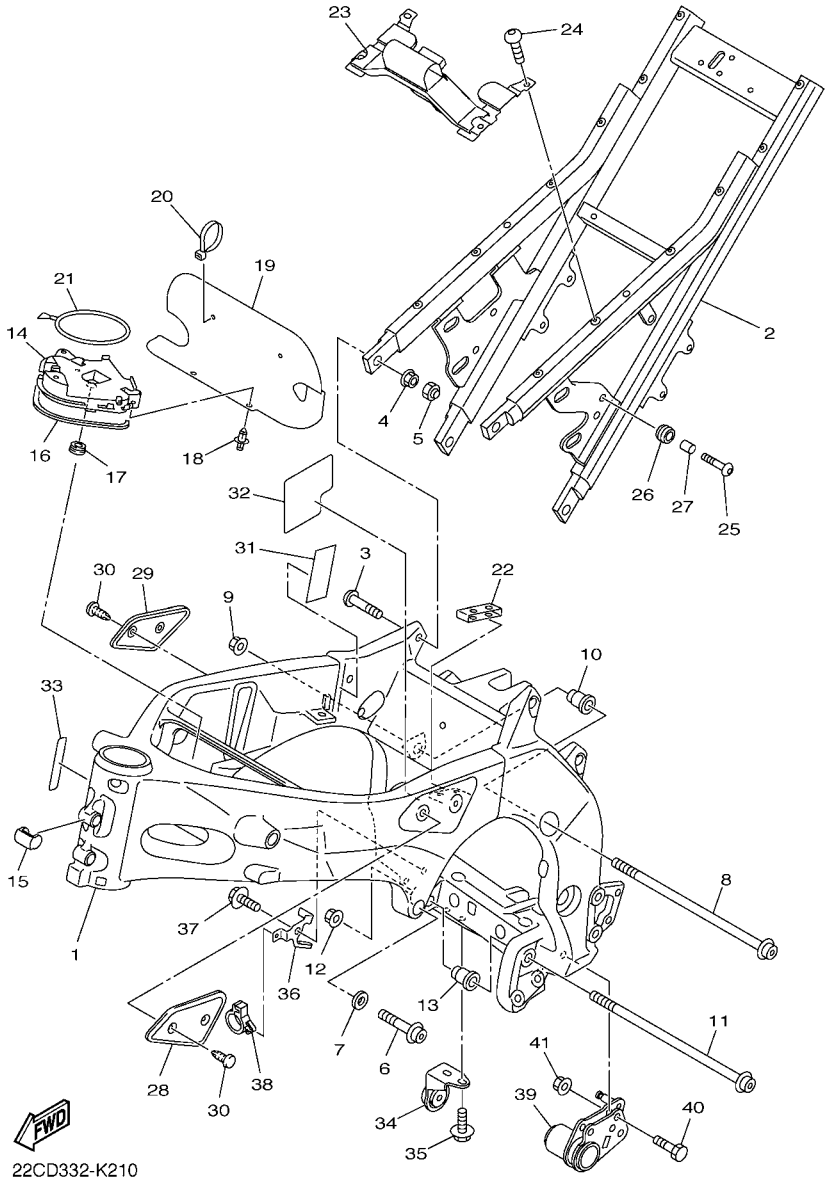

FIG. 21 CUADRO

REF. Nº	CODIGO Nº	DESCRIPCION	22CF					OBSERVACIONES
1	2D1–21110–43–P0	ARMAZON COMPLETO	1					MBL2
2	2D1–21190–11–P0	CUADRO TRASERO COMPLETA	1					MBL2
3	90157–10001	TORNILLO CABEZA CONICA PLANA	4					
4	95604–10200	TUERCA DE AUTO-CIERRE	4					
5	5YU–2143A–00	TAPA	1					
6	95024–10040	PERNO, BRIDA	2					
7	90201–10020	ARANDELA PLANA	2					
8	90110–10024	TORNILLO ALLEN	1					
9	90179–10025	TUERCA	1					
10	4C8–21495–00	PERNO DE AJUSTE	1					
11	90110–10024	TORNILLO ALLEN	1					
12	90179–10025	TUERCA	1					
13	4C8–21495–00	PERNO DE AJUSTE	1					
14	2D1–2117N–00	CUBIERTA 3	1					
15	2D1–21399–00	TAPA	1					
16	2D1–2174Y–00	AMORTIGUADOR	1					
17	90480–01333	TAPON	1					
18	90269–06001	REMACHE	2					
19	2D1–2117G–00	PROTECTOR	1					
20	1UA–82591–00	BANDA	2					
21	3YX–21376–00	BANDA DE HERRAMIENTA	1					
22	2D1–24185–00	AMORTIGUADOR DE MONTAJE 5	1					
23	5D0–21345–00	SOPORTE ACCESORIO DE DEPOSITO	1					
24	90149–06162	TORNILLO DE REGLAJE	4					
25	90111–06098	TORNILLO	2					
26	90480–14013	TAPON	2					
27	90387–06026	ESPACIADOR	2					

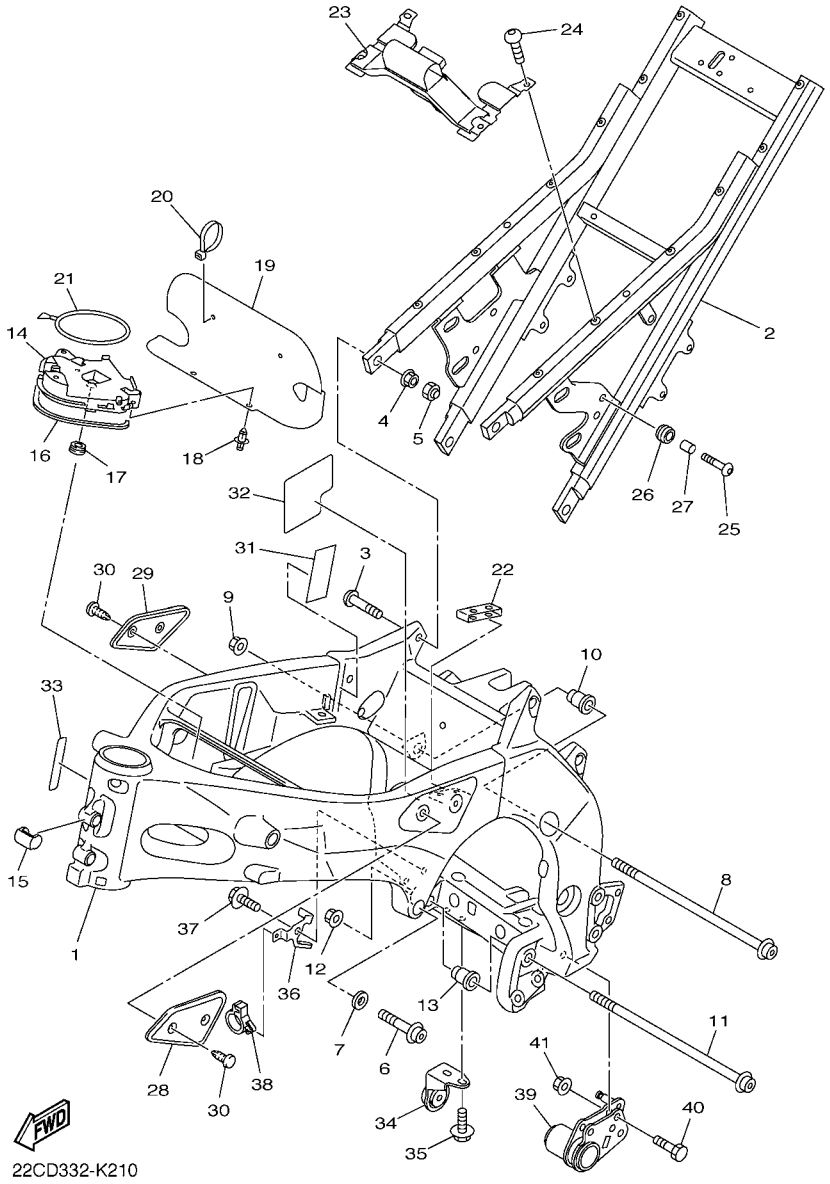

FIG. 21 CUADRO

REF. Nº	CODIGO Nº	DESCRIPCION	22CF					OBSERVACIONES
28	2D1–24129–00	CUBIERTA LATERAL 1	1					
29	2D1–24139–00	CUBIERTA LATERAL 2	1					
30	90269–06003	REMACHE	4					
31	4PX–23426–00	AMORTIGUADOR	1					
32	39P–21575–00	SELLO 1	1					
33	2D1–2197E–00	PROTECTOR DE CUADRO	1					
34	2D1–27425–02	SOPORTE DE APOYAPIE 2	1					
35	95812–08016	TORNILLO DE REBORDE	2					
36	22C–27267–00	GUIA DE CABLE	1					
37	95022–10016	PERNO, DE BRIDA	1					
38	90464–16006	BRIDA	1					
39	3C3–27151–01	SOPORTE PUNTAL PPAL.	1					
40	90101–10033	TORNILLO	2					
41	95602–10200	TUERCA DE AUTO-CIERRE	2					

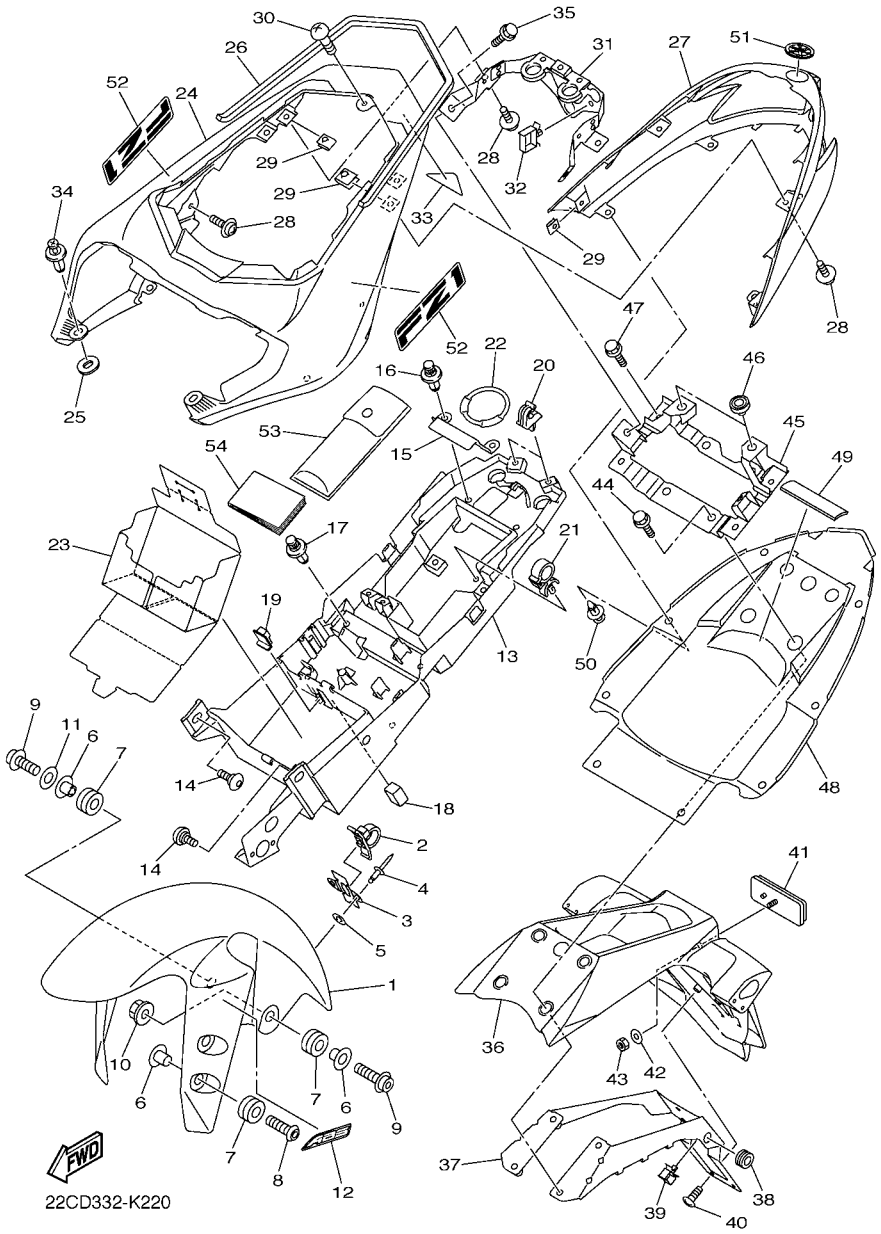

FIG. 22 GUARDABARRO

REF. Nº	CODIGO Nº	DESCRIPCION	22CF					OBSERVACIONES
1	22C–21511–01–P0	GUARDABARRO DELANTERO	1					UR PARA SMX
	22C–21511–01–P2	GUARDABARRO DELANTERO	1					UR PARA BWC1
2	90464–14008	BRIDA	1					
3	22C–21523–00	PLACA 1	1					
4	90267–32103	REMACHE CIEGO	2					
5	90201–03015	ARANDELA PLANA	2					
6	90387–065J6	ESPACIADOR	6					
7	90480–12072	TAPON	6					
8	90149–06302	TORNILLO DE REGLAJE	4					
9	90109–06031	PERNO	2					
10	95602–06200	TUERCA DE AUTO-CIERRE	2					
11	90201–07081	ARANDELA PLANA	1					
12	5VS–21578–10	EMBLEMA	2					
13	2D1–8212B–02	CAJA DE BATERIA	1					
14	90109–06253	PERNO	2					
15	22C–2163E–00	CUBIERTA TRAS GUARDABARRO 2	1					
16	90269–07007	REMACHE	2					
17	90269–07077	REMACHE	2					
18	2D1–216A2–00	SELLO 2	1					
19	2D1–216A3–00	SELLO 3	1					
20	90464–07259	BRIDA	2					
21	90464–16012	BRIDA	1					
22	2D1–21646–00	BANDA	1					
23	2D1–82122–10	ASIENTO DE BATERIA	1					
24	2D1–21651–00–P0	TAPA DE GUARDABARRO TRAS.	1					UR PARA SMX
	2D1–21651–00–P7	TAPA DE GUARDABARRO TRAS.	1					UR MBL2 PARA BWC1
25	5PW–2174X–00	AMORTIGUADOR	2					

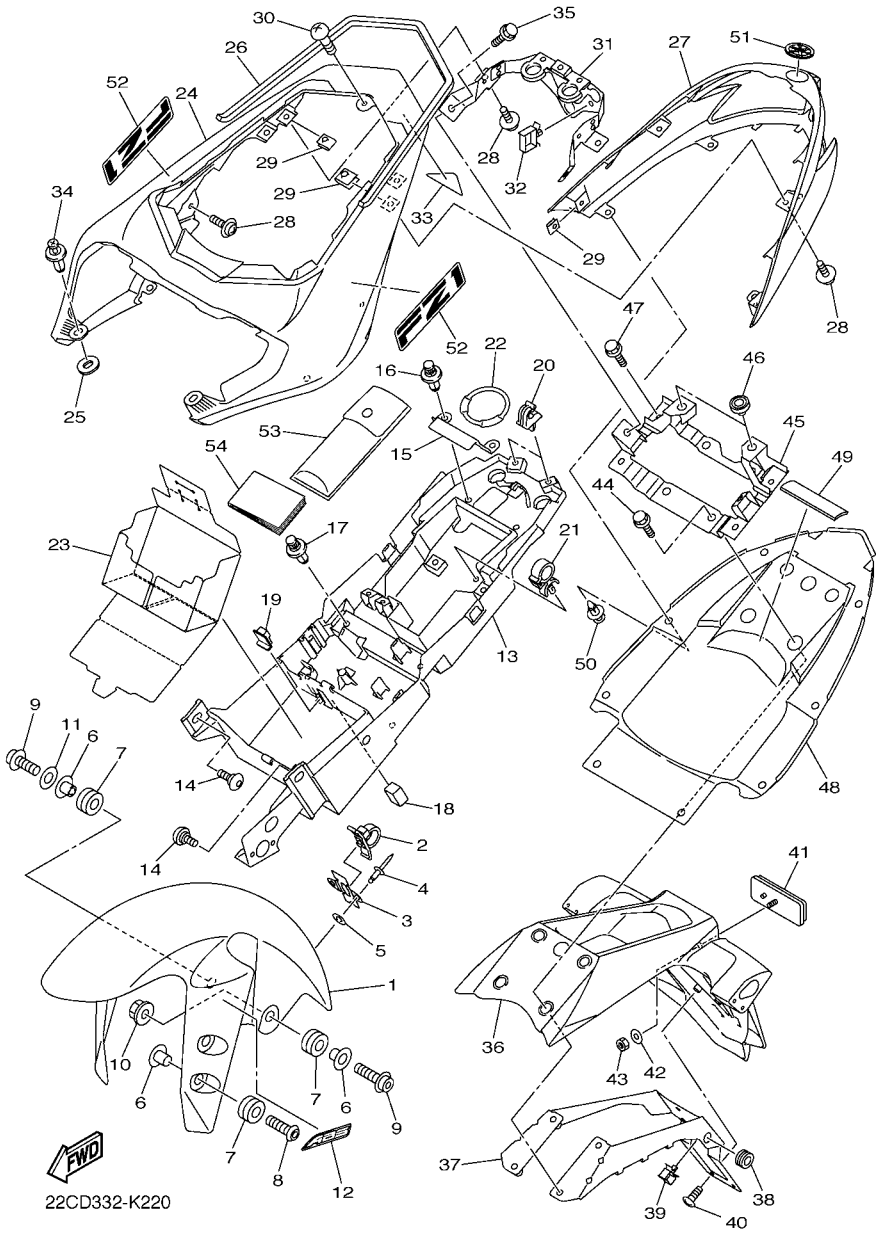

FIG. 22 GUARDABARRO

REF. Nº	CODIGO Nº	DESCRIPCION	22CF					OBSERVACIONES
26	2D1–24747–00	AMORTIGUADOR DE ASIENTO	1					
27	2D1–2163A–00	CUBIERTA TRAS GUARDABARRO 1	1					
28	90159–05056	TORNILLO CON VALONA	6					
29	90183–051A0	TUERCA DE RESORTE	6					
30	98902–06012	TORNILLO DE AJUSTE	1					
31	2D1–2117E–00	SOPORTE DE LANTERNA TRAZERA	1					
32	90464–16021	BRIDA	1					
33	2D1–21669–00	SELLO	1					
34	90269–07076	REMACHE	2					
35	95822–08012	TORNILLO DE REBORDE	2					
36	2D1–21629–00	GUARDABARRO INFERIOR	1					
37	2D1–21688–02	SOPORTE	1					
38	90480–13004	TAPON	2					
39	90464–16021	BRIDA	1					
40	97702–50016	TORNILLO ROSCA HEMBRA	6					
41	3Y6–85130–02	REFLECTOR TRASERO COMPLETO	1					
42	90201–05043	ARANDELA PLANA	1					
43	95602–05100	TUERCA U	1					
44	95812–08025	TORNILLO DE REBORDE	4					
45	2D1–21261–00	SOPORTE GUARDABARRO TRASERO	1					
46	22W–24741–00	COJIN DE ASIENTO	2					
47	95822–06020	TORNILLO DE REBORDE	4					
48	2D1–21611–00	GUARDABARRO TRASERO	1					
49	2D1–21639–00	AMORTIGUADOR 2	1					
50	90269–07077	REMACHE	8					
51	4KN–2836B–10	MARCA	1					
52	2D1–2163G–F0	EMBLEMA	2					PARA SMX

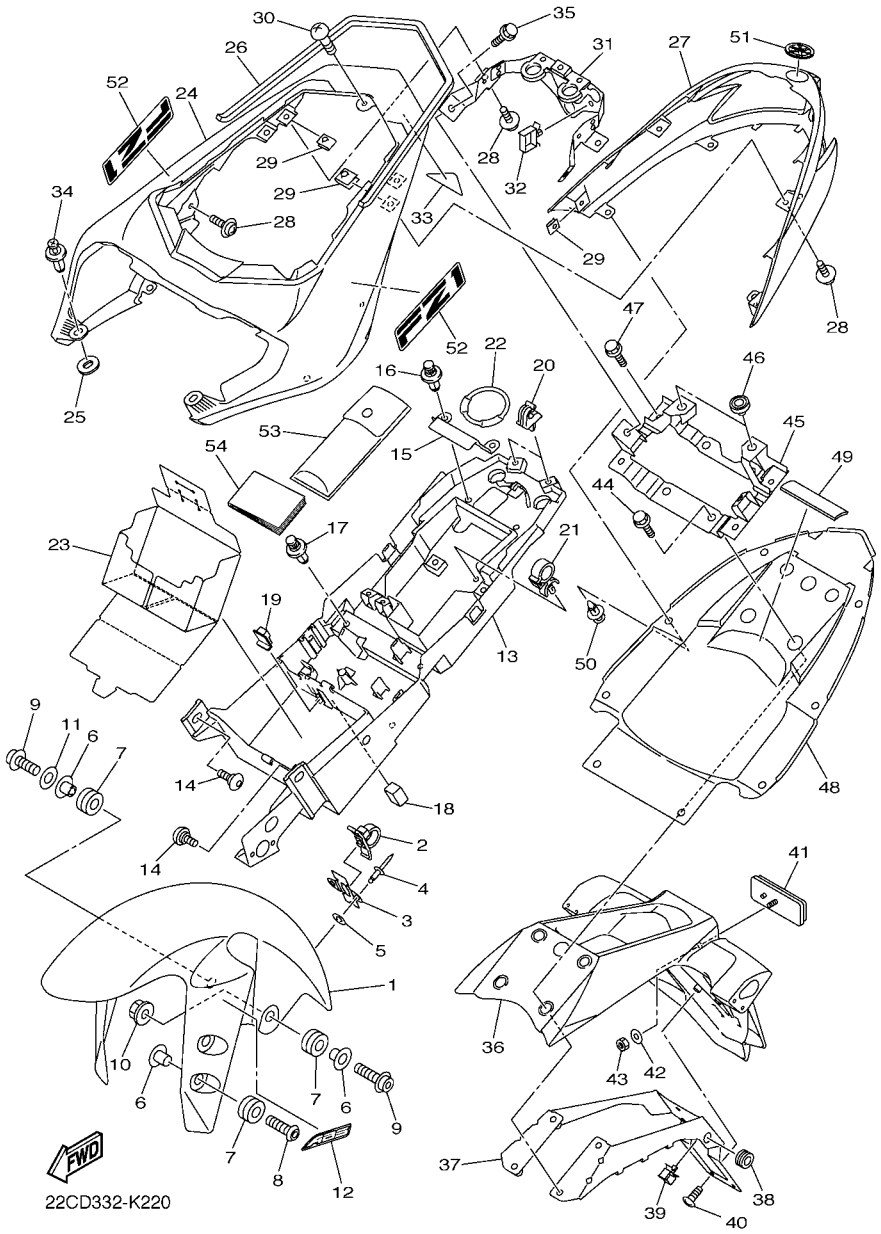

FIG. 22 GUARDABARRO

REF. Nº	CODIGO Nº	DESCRIPCION	22CF					OBSERVACIONES
53	39P–28100–01	JUEGO DE HERRAMIENTAS	1					
54	1EC–28199–S1	MANUAL DEL PROPRIETARIO	1					

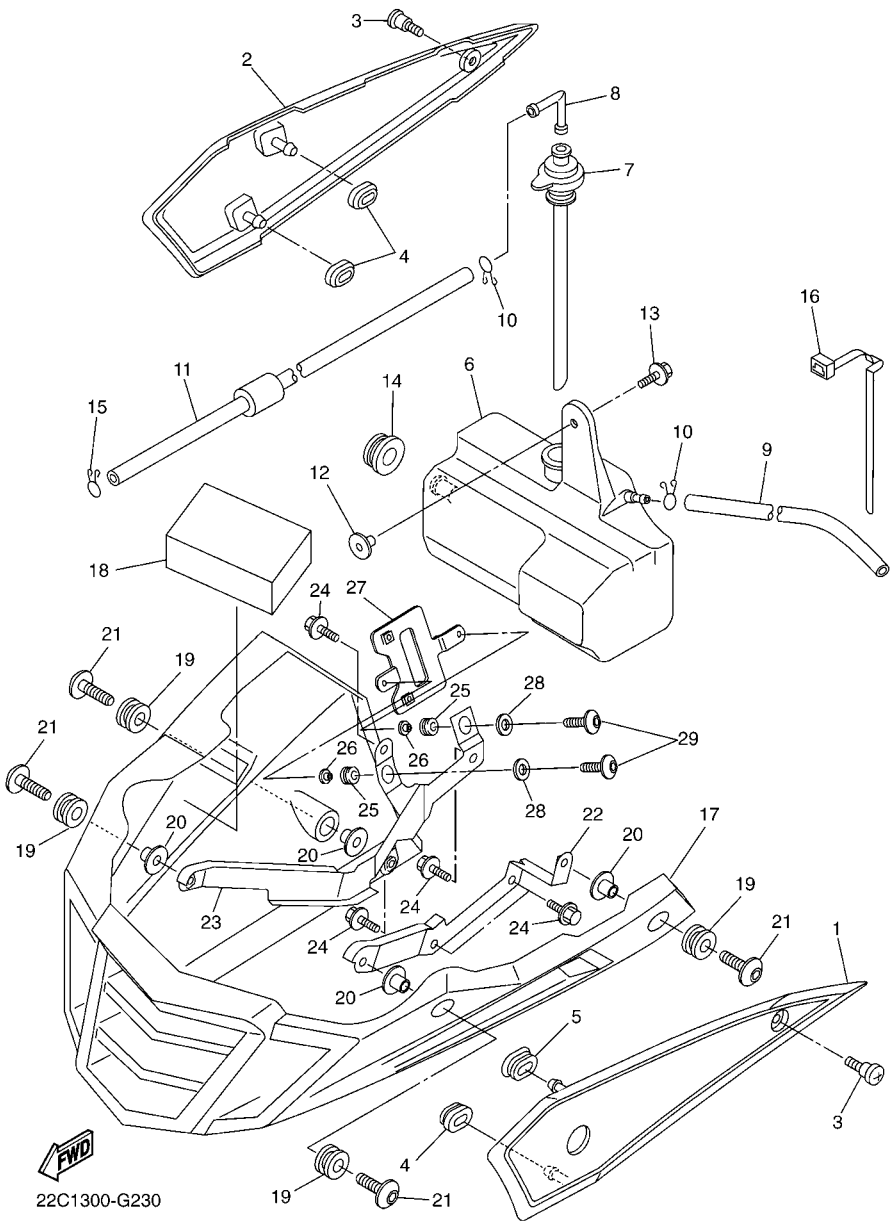

FIG. 23 CUBIERTA LATERAL

REF. Nº	CODIGO Nº	DESCRIPCION	22CF					OBSERVACIONES
1	2D1–21711–00	CUBIERTA LATERAL 1	1					
2	5D0–21721–00	CUBIERTA LATERAL 2	1					
3	90149–06165	TORNILLO DE REGLAJE	2					
4	90480–01559	TAPON	3					
5	2D1–21719–00	ANILLO PROTECTOR	1					
6	2D1–21871–00	TANQUE DE RECUPERACION	1					
7	5VY–21875–00	TAPA	1					
8	26H–21828–00	CODO	1					
9	90445–08022	TUBO	1					
10	90467–08075	PRESILLA	2					
11	90445–087K6	TUBO (L700)	1					
12	90387–062M9	ESPACIADOR	1					
13	90119–06230	TORNILLO CON ARANDELA	1					
14	90480–20001	TAPON	1					
15	90467–08075	PRESILLA	1					
16	90464–07M40	BRIDA	1					
17	22C–28385–00–P3	CUBIERTA INFERIOR	1					MBL2
18	22C–28415–00	AMORTIGUADOR 1	1					
19	90480–12596	TAPON	4					
20	90387–065J6	ESPACIADOR	4					
21	90149–06302	TORNILLO DE REGLAJE	4					
22	22C–2129Y–00	SOPORTE	1					
23	22C–21287–00	SOPORTE DE REGULADOR	1					
24	95822–06012	TORNILLO DE REBORDE	5					
25	90480–12024	TAPON	2					
26	90387–087L0	ESPACIADOR	2					
27	22C–87208–00	APOYO DE REGULADOR	1					

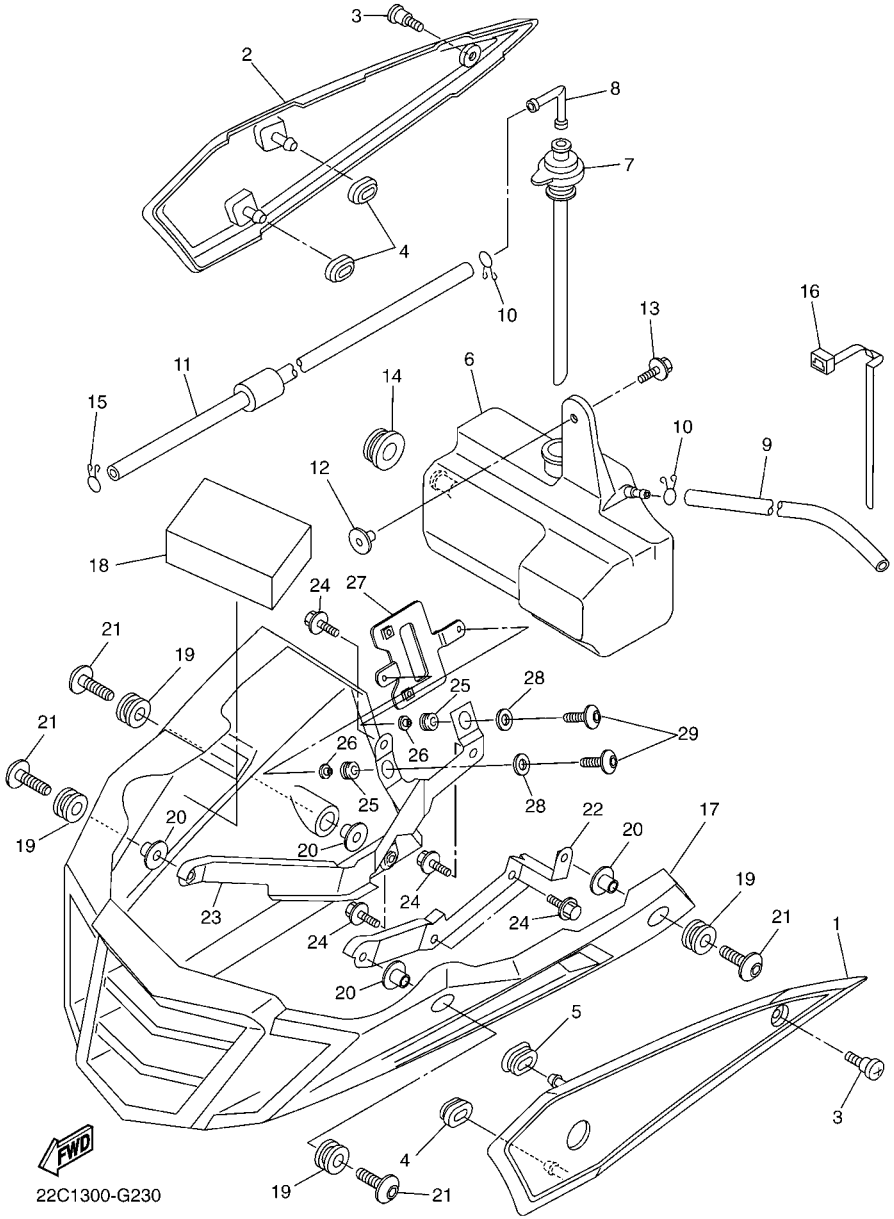

FIG. 23 CUBIERTA LATERAL

REF. Nº	CODIGO Nº	DESCRIPCION	22CF					OBSERVACIONES
28	90201–06M01	ARANDELA PLANA	2					
29	92012–06016	PERNO	2					

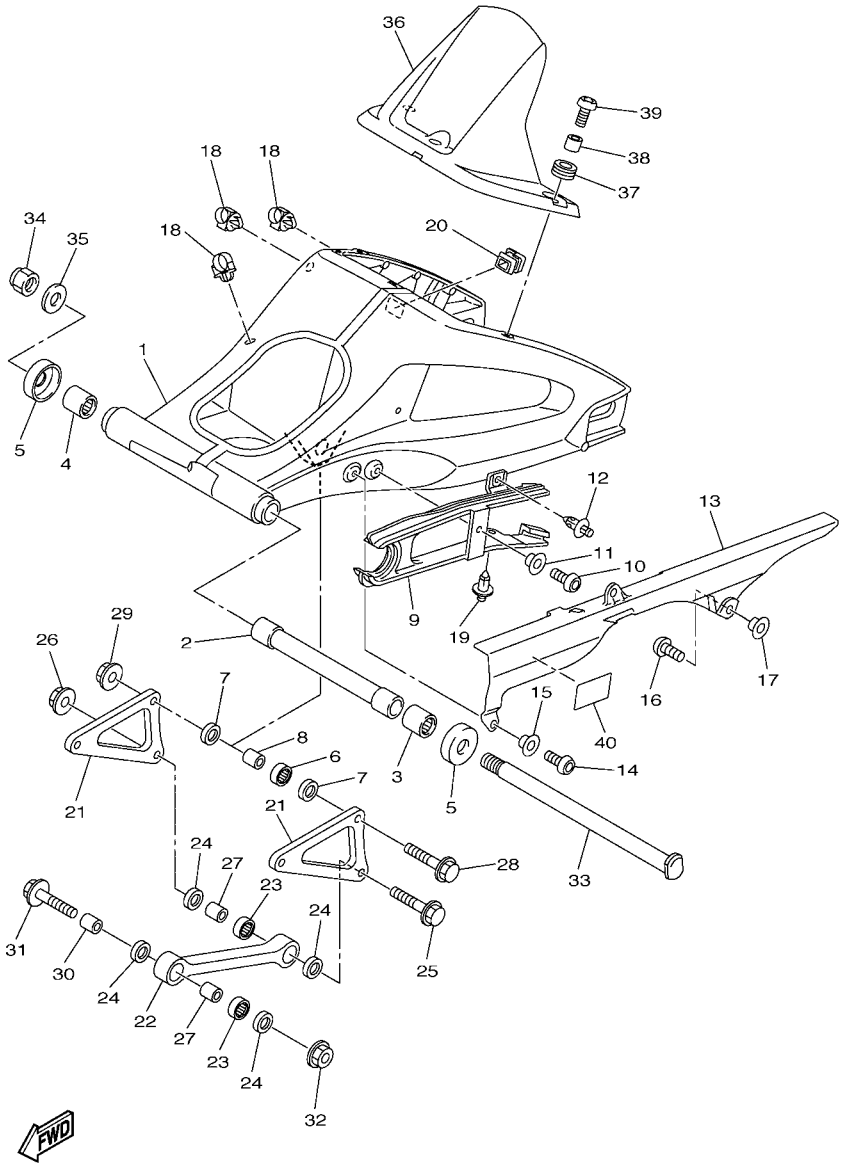

FIG. 24 BRAZO TRASERO

REF. Nº	CODIGO Nº	DESCRIPCION	22CF					OBSERVACIONES
1	5D0–22110–10	BRAZO TRASERO COMPLETO	1					
2	39P–22184–00	BUJE	1					
3	93317–42599	COJINETE	1					
4	93315–42536	COJINETE DE RODILLOS	1					
5	5JJ–22128–00	TAPA DE EMPIJE 1	2					
6	93315–41762	COJINETE DE RODILLOS	1					
7	93109–17071	SELLO ACEITE	2					
8	90387–1012A	ESPACIADOR	1					
9	2D1–22151–00	SELLO DE GUARDA	1					
10	92012–06014	PERNO	1					
11	90387–06130	ESPACIADOR	1					
12	90269–07007	REMACHE	1					
13	5SL–22311–00	CABRECADENA	1					
14	92012–06014	PERNO	1					
15	90387–06130	ESPACIADOR	1					
16	90110–06102	TORNILLO ALLEN	2					
17	90387–06009	ESPACIADOR	2					
18	90464–17003	BRIDA	3					
19	90269–07008	REMACHE	1					
20	2D1–22117–00	TAPA	1					
21	2D1–2217A–10	BRAZO REEURIO	2					
22	2D1–2217M–00	BRAZO 1	1					
23	93315–31758	COJINETE DE RODILLOS	2					
24	93109–17071	SELLO ACEITE	4					
25	90105–10283	TORNILLO	1					
26	95602–10200	TUERCA DE AUTO-CIERRE	1					
27	90387–1012A	ESPACIADOR	2					

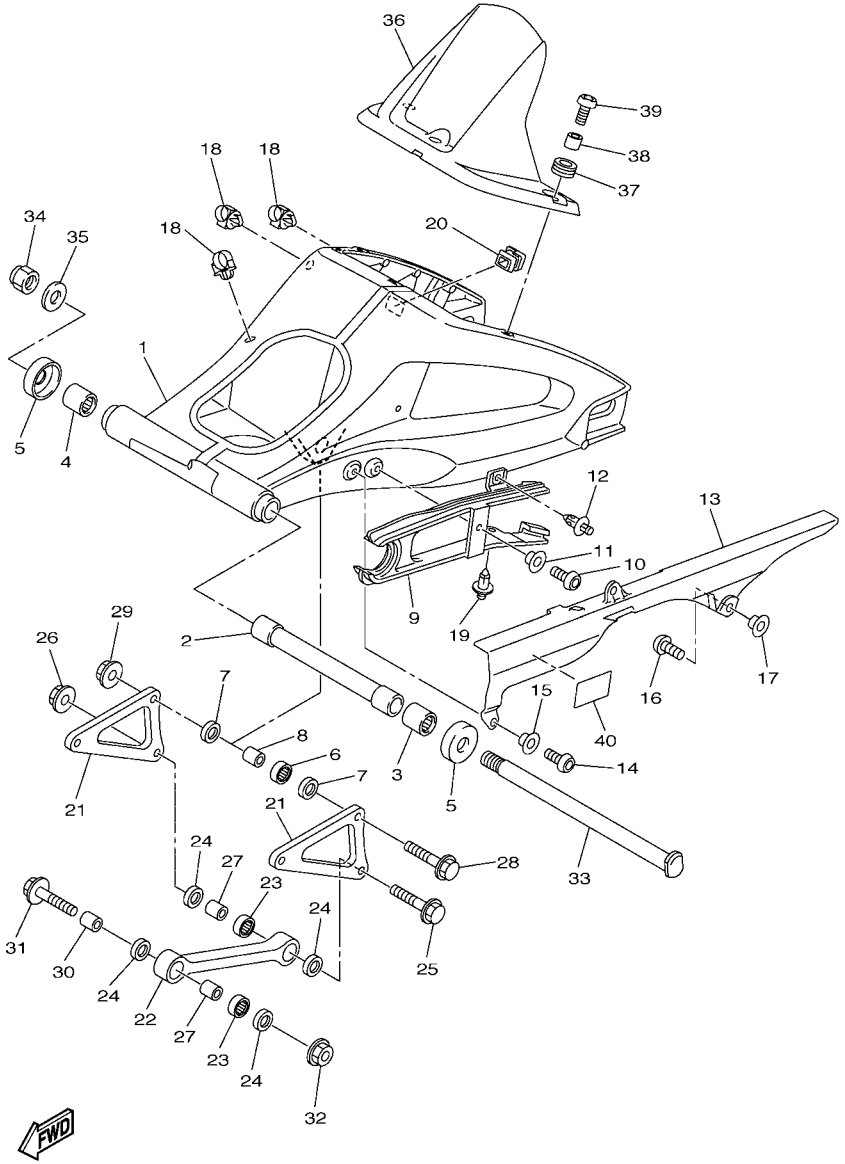

FIG. 24 BRAZO TRASERO

REF. Nº	CODIGO Nº	DESCRIPCION	22CF					OBSERVACIONES
28	90105–10283	TORNILLO	2					
29	95602–10200	TUERCA DE AUTO-CIERRE	2					
30	90387–10043	ESPACIADOR	1					
31	90105–10211	TORNILLO	1					
32	95602–10200	TUERCA DE AUTO-CIERRE	1					
33	39P–22141–00	EJE DEL BARCULANTE	1					
34	90185–18009	TUERCA AUTOBLOCANTE	1					
35	90201–18013	ARANDELA PLANA	1					
36	2D1–21650–00	GUARDABARRO TRANSERO COMP.	1					
37	90480–12003	TAPON	3					
38	90387–06219	ESPACIADOR	3					
39	90149–06302	TORNILLO DE REGLAJE	3					
40	14B–21668–00	ETIQUETA DE FRANJA	1					

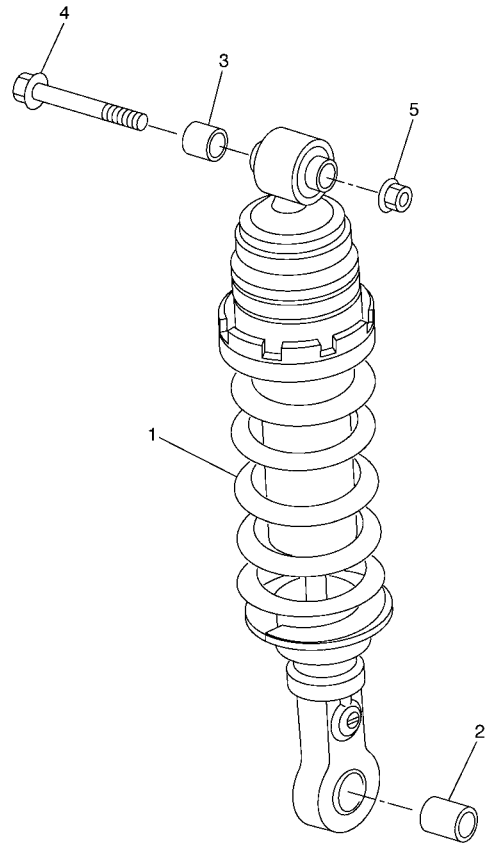

2D11300-E250

FIG. 25 SUSPENSION TRASERO

REF. Nº	CODIGO Nº	DESCRIPCION	22CF					OBSERVACIONES
1	5D0–22210–20	AMORTIGUADOR TRASERO COMPLETO	1					UR PARA SMX
	5D0–22210–00	AMORTIGUADOR TRASERO COMPLETO	1					UR PARA BWC1
2	90387–1012A	ESPACIADOR	1					
3	90387–10043	ESPACIADOR	1					
4	90105–10211	TORNILLO	1					
5	95602–10200	TUERCA DE AUTO-CIERRE	1					

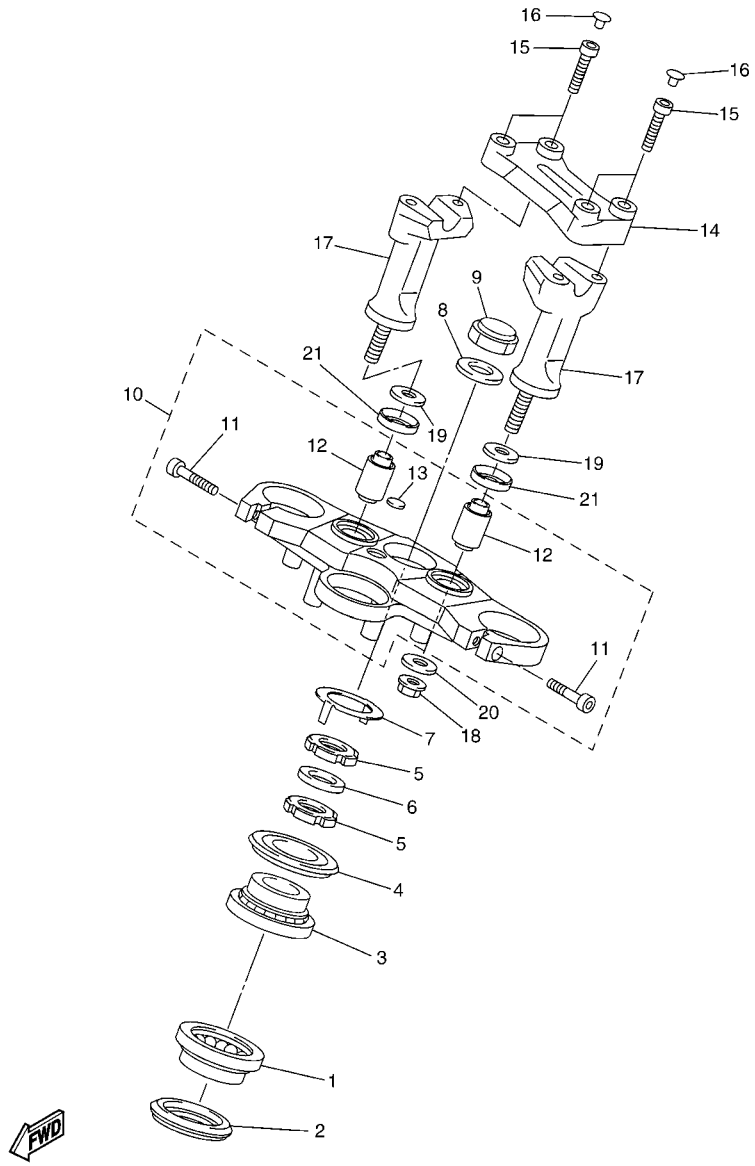

2D1B300-G260

FIG. 26 DIRECCION

REF. Nº	CODIGO Nº	DESCRIPCION	22CF					OBSERVACIONES
1	93399–99957	COJINETE	1					
2	3FV–23462–00	SELLO PARA POLVO	1					
3	93399–99932	COJINETE	1					
4	4XV–23415–01	CUBIERTA DE PISTA DE BOLAS 1	1					
5	90179–30006	TUERCA	2					
6	90202–30235	ARANDELA DE PLANA	1					
7	4XV–23418–00	ARANDELA ESPECIAL	1					
8	90201–281U8	ARANDELA PLANA	1					
9	90176–28083	TUERCA CORONA	1					
10	2D1–23405–01	PLATINA SUPERIOR	1					
11	91312–08030	.TORNILLO	2					
12	3VD–23434–00	.SOPORTE DE AMORTIGUADOR	2					
13	4XV–2341B–00	.EMBLEMA	1					
14	2D1–23441–00	SOPORTE DE MANUBRIO	1					
15	91312–08030	TORNILLO	4					
16	90338–08163	TAPON	4					
17	2D1–23442–00	SOPORTE DE MANUBRIO INFERIOR	2					
18	95602–10200	TUERCA DE AUTO-CIERRE	2					
19	92902–10200	ARANDELA	2					
20	90201–10065	ARANDELA PLANA	2					
21	5YU–23445–00	AMORTIGUADOR	2					

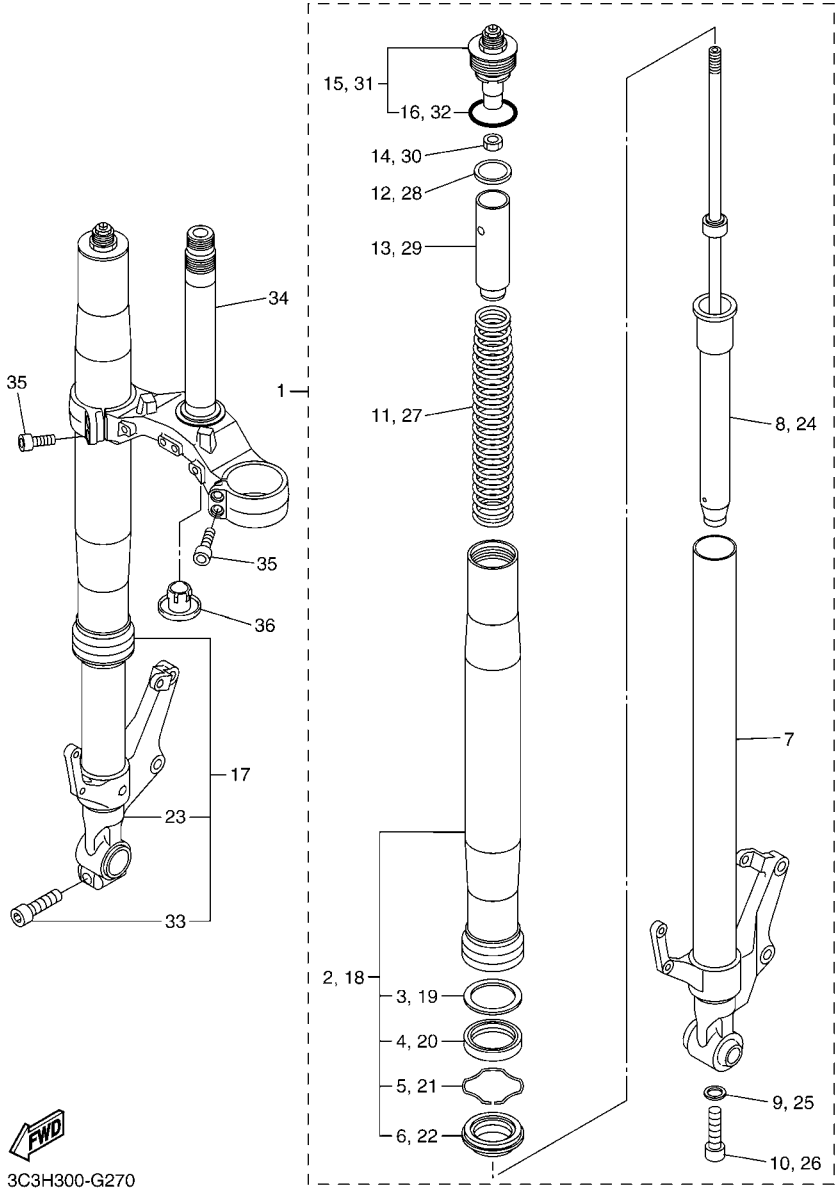

FIG. 27 HORQUILLA DELANTERA

REF. Nº	CODIGO Nº	DESCRIPCION	22CF					OBSERVACIONES
1	5D0–23102–12	HORQUILLA DELANTERA COMPL.(MI)	1					
2	2D1–23136–00	.TUBO EXTERIOR	1					
3	4V4–23146–L0	..ARANDELA DE SELLO DE ACEITE	1					
4	4PU–23145–01	..RETEN DE ACEITE	1					
5	4V4–23153–L0	..ANILLO DE ENGANCHE	1					
6	4PU–23144–00	..GUARDAPOLVO	1					
7	5D0–23110–00	.TUBO INTERIOR COMPLETO 1	1					
8	2D1–23170–11	.CILINDRO COMPL DE HORQ DELANT	1					
9	509–23158–L0	.EMPAQUE	1					
10	278–23181–50	.TORNILLO CABEZAHEXAGONAL	1					
11	2D1–23141–00	.RESORTE HORQUILLA DELANT.	1					
12	5VY–12277–00	.ARANDELA	1					
13	5VY–23118–00	.SEPARADOR	1					
14	3LC–23357–00	.TUERCA	1					
15	2D1–23111–00	.PERNO DE TAPA	1					
16	3XJ–23147–L0	..ARO	1					
17	5D0–23103–12	HORQUILLA DELANTERA COMPL.(MD)	1					
18	2D1–23136–00	.TUBO EXTERIOR	1					
19	4V4–23146–L0	..ARANDELA DE SELLO DE ACEITE	1					
20	4PU–23145–01	..RETEN DE ACEITE	1					
21	4V4–23153–L0	..ANILLO DE ENGANCHE	1					
22	4PU–23144–00	..GUARDAPOLVO	1					
23	5D0–23120–00	.TUBO INTERIOR COMPLETO 2	1					
24	2D1–23170–01	.CILINDRO COMPL DE HORQ DELANT	1					
25	509–23158–L0	.EMPAQUE	1					
26	278–23181–50	.TORNILLO CABEZAHEXAGONAL	1					
27	2D1–23141–00	.RESORTE HORQUILLA DELANT.	1					

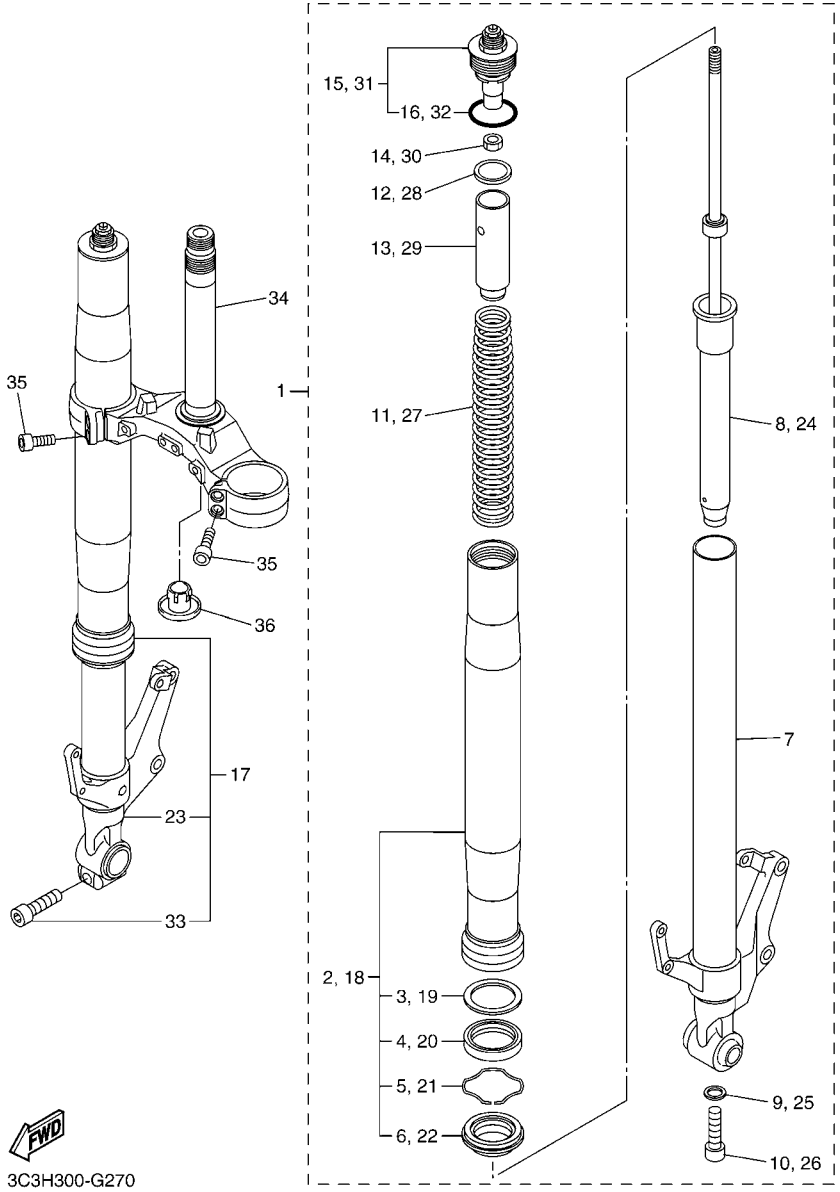

FIG. 27 HORQUILLA DELANTERA

REF. Nº	CODIGO Nº	DESCRIPCION	22CF					OBSERVACIONES
28	5VY–12277–00	.ARANDELA	1					
29	5VY–23118–00	.SEPARADOR	1					
30	3LC–23357–00	.TUERCA	1					
31	2D1–23111–00	.PERNO DE TAPA	1					
32	3XJ–23147–L0	..ARO	1					
33	91314–08040	.TORNILLO ALLEN	1					
34	2D1–23340–10	PLATINA INFERIOR COMPLETA	1					
35	91312–08030	TORNILLO	4					
36	4KM–23123–01	CUBIERTA INFERIOR	1					

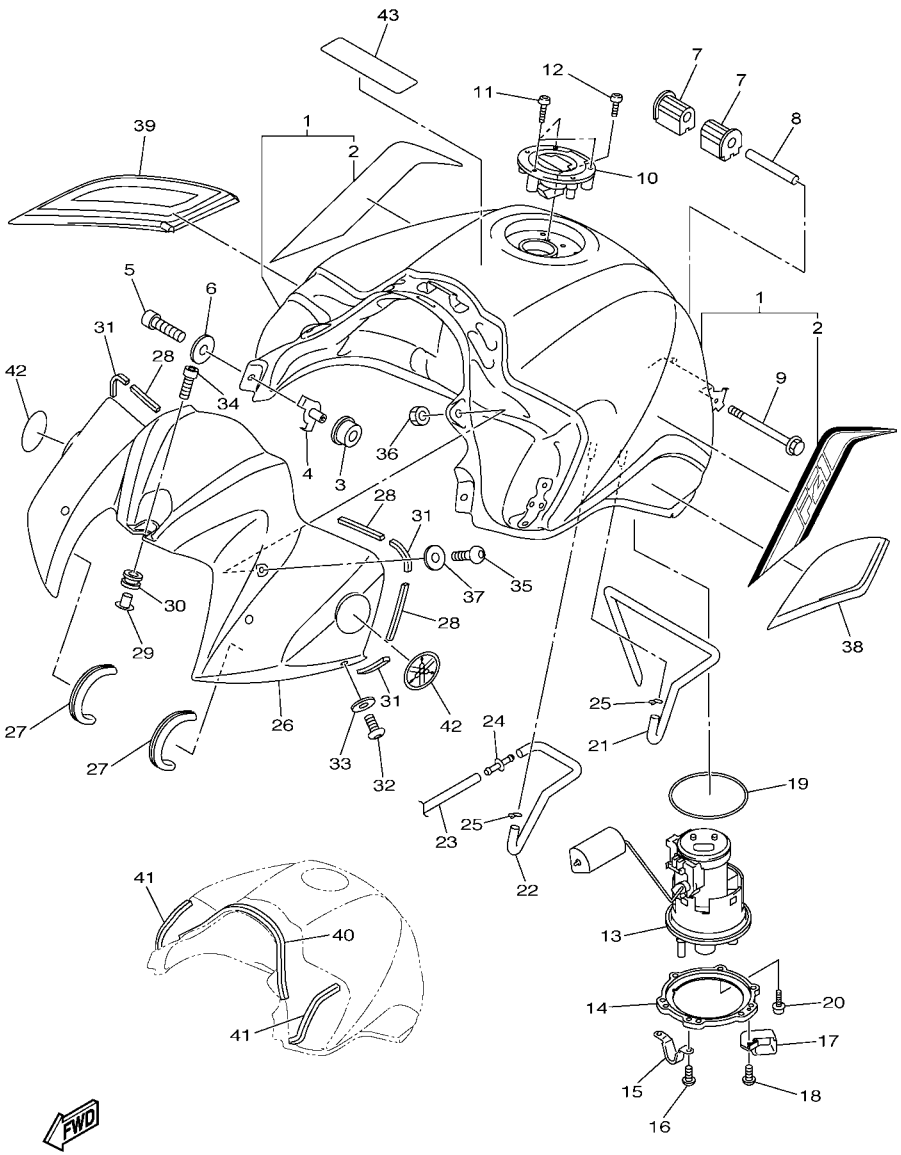

FIG. 28 DEPOSITO DE COMBUSTIBLE

REF. Nº	CODIGO Nº	DESCRIPCION	22CF					OBSERVACIONES
1	2D1–YK241–00–P0	DEPOSITO DE COMBUSTIBLE COMP.	1					UR PARA SMX
	2D1–Y2410–00–W3	DEPOSITO DE COMBUSTIBLE COMP.	1					UR PARA BWC1
2	1EC–24240–00	.JUEGO DE CALCOMANIAS	1					PARA BWC1
3	5VY–24181–00	AMORTIGUADOR DE MONTAJE 1	2					
4	2D1–2412G–00	COLLAR	2					
5	91312–06016	TORNILLO	2					
6	90201–06086	ARANDELA PLANA	2					
7	5VX–24181–00	AMORTIGUADOR DE MONTAJE 1	2					
8	90387–061W6	ESPACIADOR	1					
9	91312–06090	TORNILLO	1					
10	39P–24602–00	TAPON COMPLETO	1					
11	90110–05112	TORNILLO ALLEN	3					
12	91312–05010	TORNILLO	1					
13	2D1–13907–02	BOMBA DE COMBUSTIBLE COMPLETA	1					
14	1EC–24491–00	SOPORTE BOMBA COMBUSTIBLE	1					
15	2D1–24192–00	SOPORTE DE DEPOSITO COMBUST.2	1					
16	98902–05008	TORNILLO DE AJUSTE	2					
17	5D0–24135–00	GRAMPA 1	1					
18	90154–05035	TORNILLO DE LIGAR	1					
19	19B–24486–00	ANILLO O	1					
20	90110–05028	TORNILLO ALLEN	6					
21	5D0–24315–00	TUBO DE DESAGUE	1					
22	5D0–24316–00	TUBO 6	1					
23	5D0–24317–00	TUBO 7	1					
24	8H8–24376–00	TUBO DE UNION 1	1					
25	90467–09006	PRESILLA	2					
26	2D1–2171A–00–P0	CUBIERTA, TECHO	1					UR PARA SMX

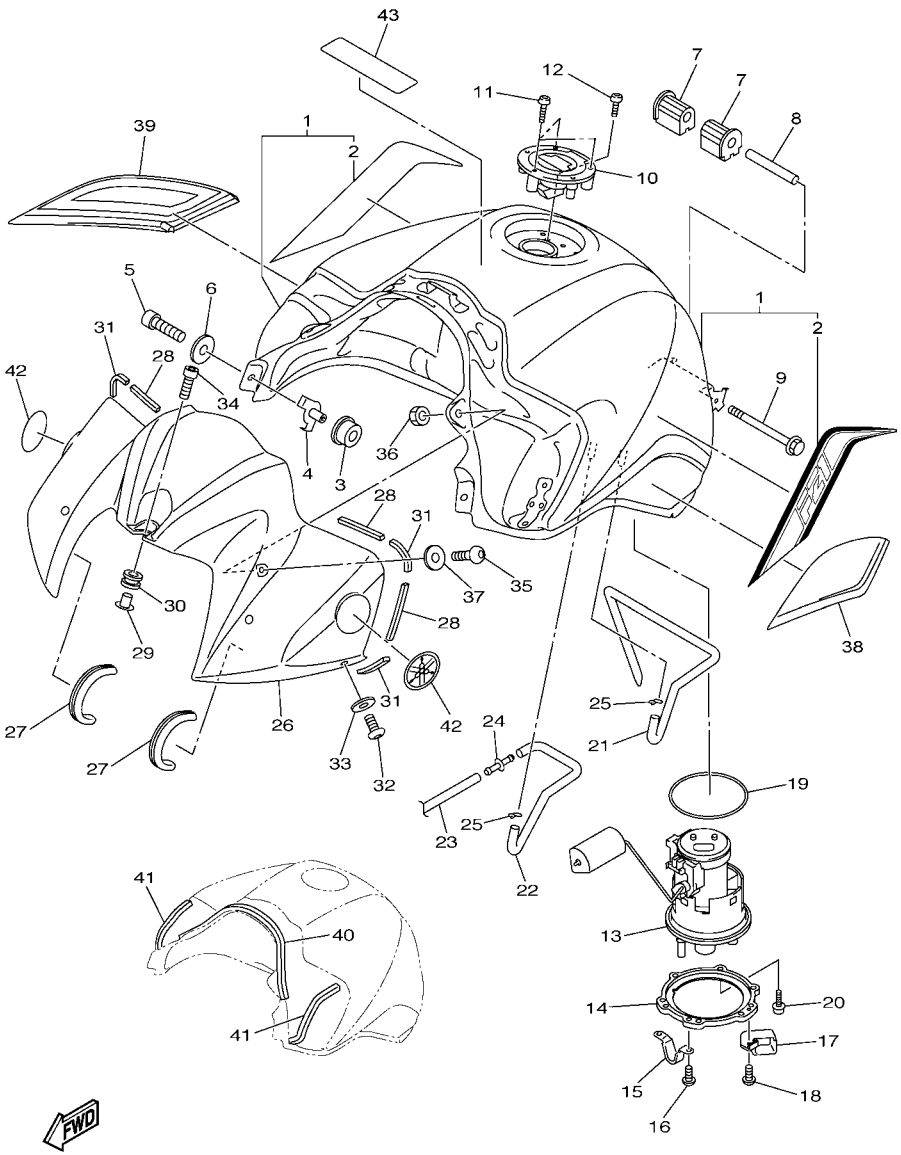

22CF300-L280

FIG. 28 DEPOSITO DE COMBUSTIBLE

REF. Nº	CODIGO Nº	DESCRIPCION	22CF					OBSERVACIONES
26	2D1–2171A–00–P5	CUBIERTA, TECHO	1					UR PARA BWC1
27	2D1–28345–01	MOLDURA 1	2					
28	4XV–2834E–00	AMORTIGUADOR 3	4					
29	90387–06222	ESPACIADOR	1					
30	90480–12314	TAPON	1					
31	2D1–24181–00	AMORTIGUADOR DE MONTAJE 1	4					
32	90111–05019	TORNILLO	2					
33	90202–05224	ARANDELA DE PLANA	2					
34	90110–06233	TORNILLO ALLEN	1					
35	90111–05024	TORNILLO	2					
36	90179–05003	TUERCA	2					
37	90202–05088	ARANDELA DE PLANA	2					
38	2D1–24106–01	CUBIERTA LATERAL COMPLETA 1	1					
39	2D1–24108–01	CUBIERTA LATERAL COMPLETA 2	1					
40	2D1–2414P–00	EQUILIBRIO, CUBIERTA	1					
41	2D1–2414R–00	EQUILIBRIO, CUBIERTA	2					
42	5SL–2413B–00	EMBLEMA	2					
43	1CA–21568–00	ETIQUETA DE PRECAUCION	1					

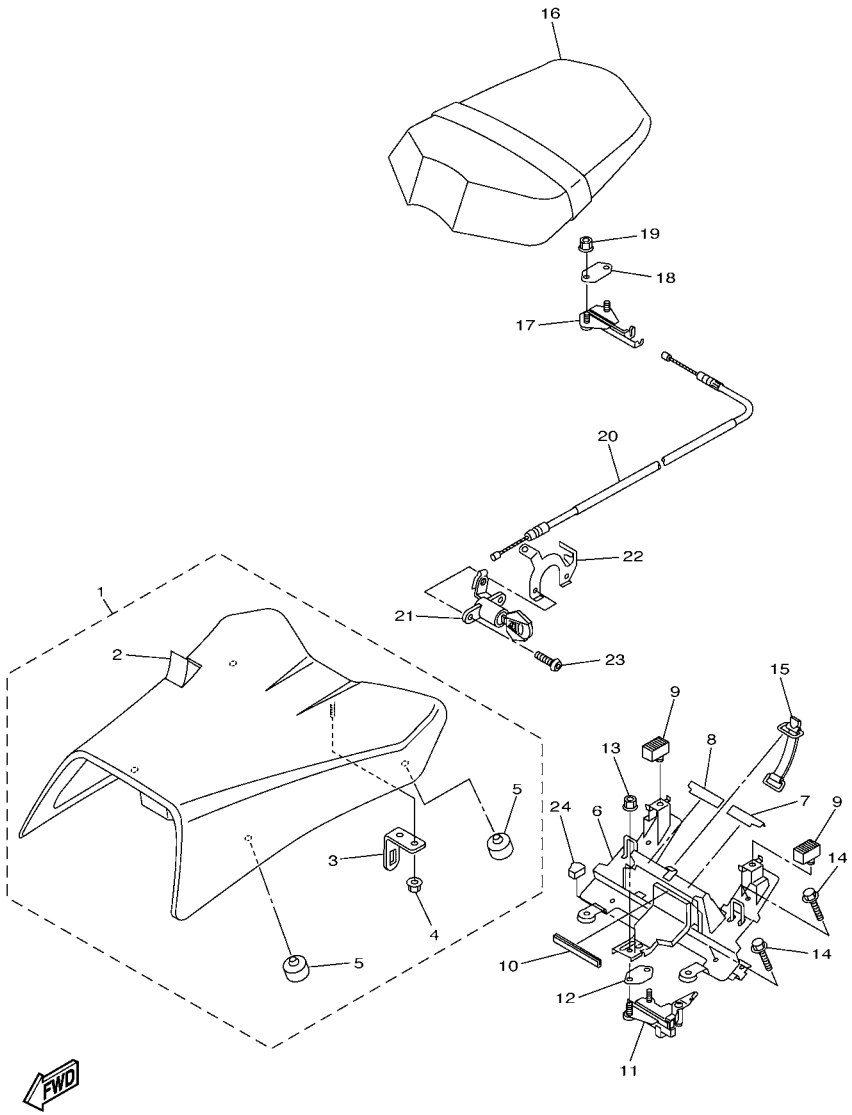

22C5300-H290

FIG. 29 ASIENTO

REF. Nº	CODIGO Nº	DESCRIPCION	22CF					OBSERVACIONES
1	2D1–24710–01	ASIENTO SIMPLE COMPLETO	1					
2	2D1–24711–00	.CUBIERTA DE ASIENTO SIMPLE	1					
3	4HM–24728–00	.SOPORTE DE ASIENTO	1					
4	95602–06200	.TUERCA DE AUTO-CIERRE	1					
5	278–27114–00	.TOPE DE PUNTAL PRINCIPAL	4					
6	2D1–21341–11	SOPORTE DE ASIENTO 1	1					
7	2D1–2476U–00	PROTECTOR	1					
8	2D1–2476V–00	PROTECTOR2	1					
9	3C3–24741–00	COJIN DE ASIENTO	2					
10	2D1–24785–00	MOLDURA DE ASIENTO	1					
11	2D1–24780–02	CERRADURA SILLIN COMPLETO	1					
12	4BP–24792–00	PLACA	1					
13	95702–06500	TUERCA DE BRIDA	2					
14	95822–06020	TORNILLO DE REBORDE	4					
15	18G–82131–00	TIRANTE DE BATERIA	1					
16	2D1–24750–01	ASIENTO TANDEM COMPLETO	1					
17	4BP–24780–00	CERRADURA SILLIN COMPLETO	1					
18	4BP–24792–00	PLACA	1					
19	95702–06500	TUERCA DE BRIDA	2					
20	2D1–2478E–00	CABLE	1					
21	2TV–W2470–00	JUEGO DE ROTOR	1					
22	4XV–2117K–00	SOPORTE DE CERRADURA	1					
23	90149–06134	TORNILLO DE REGLAJE	2					
24	2D1–24665–00	AMORTIGUADOR	1					

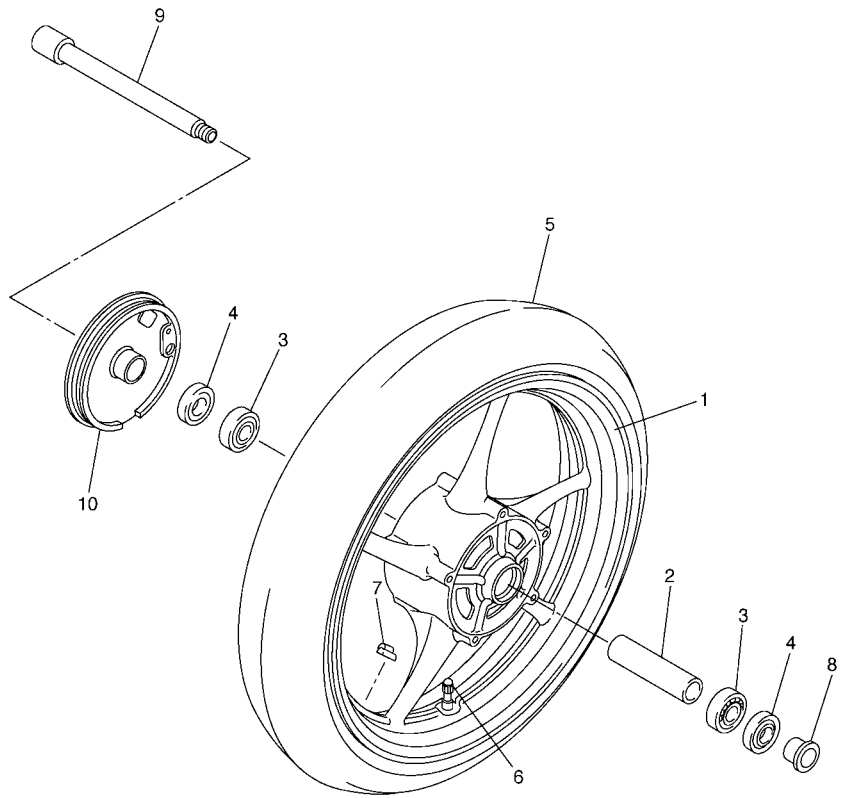

4P51300-E290

FIG. 30 RUEDA DELANTERA

REF. Nº	CODIGO Nº	DESCRIPCION	22CF					OBSERVACIONES
1	5D0–W2516–00–98	RUEDA FUNDIDA DELANTERA	1					LGB
2	90387–22029	ESPACIADOR	1					
3	93306–00420	COJINETE	2					
4	93106–28043	SELLO ACEITE	2					
5	94112–17094	NEUMATICO(120/70 ZR17M/C 58W)	1					DUNLOP
6	93900–00030	VALVULA DE ARO (TR412)	1					TAIHEIYO
7	5MT–25398–00	BALANCEADOR DE RUEDA (10G)	1					UN
	5MT–25398–10	BALANCEADOR DE RUEDA (20G)	1					UN
	5MT–25398–20	BALANCEADOR DE RUEDA (30G)	1					UN
8	90387–22016	ESPACIADOR	1					
9	4XV–25181–10	EJE DE LA RUEDA	1					
10	4P5–2517A–00–98	CAJA DE SENSOR	1					LGB

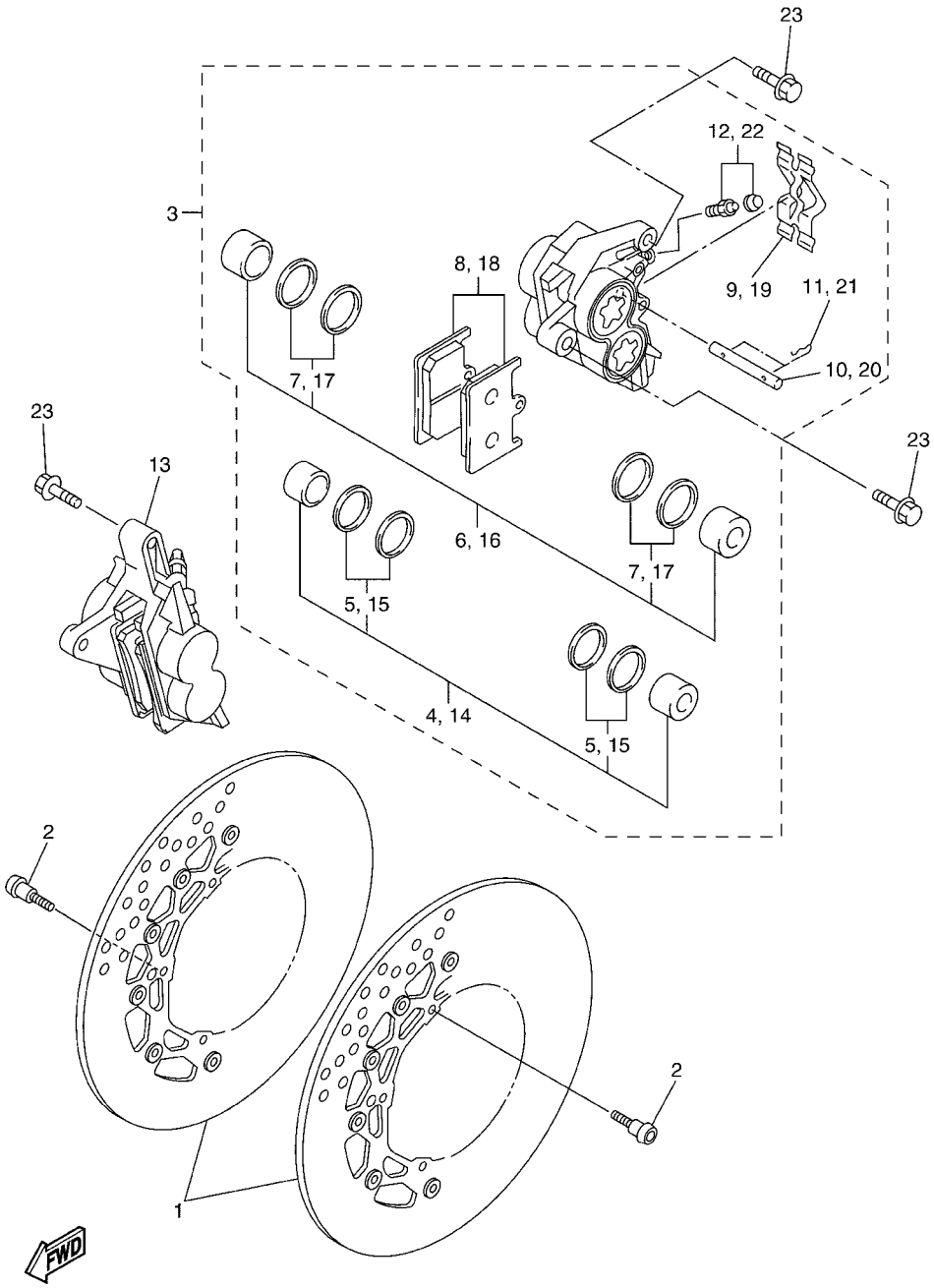

FIG. 31 CALIBRE FRENO DELANTERA

REF. Nº	CODIGO Nº	DESCRIPCION	22CF					OBSERVACIONES
1	5D0–2581T–00	DISCO DE FRENO	2					
2	90149–06043	TORNILLO DE REGLAJE	10					
3	2D1–2580T–00	CALIBRE COMPLETO (IZQUIERDO)	1					
4	4SV–W0057–00	.PISTON COMPLETO PINZA	1					
5	3MA–W0047–10	..JUEGO DE RETENES DE PINZA	1					
6	4SV–W0057–10	.PISTON COMPLETO PINZA	1					
7	3GM–W0047–10	..JUEGO DE RETENES DE PINZA	1					
8	5SL–W0045–00	.JUEGO DE COJIN DE FRENO	1					
9	4SV–25919–00	.SOPORTE DE PASTILLAS	1					
10	4SV–25924–00	.PASADOR	1					
11	3GM–25925–00	.PRESILLA	2					
12	1J3–W0048–00	.CJTO TORNILLO DE PURGA	1					
13	5D0–2580U–00	CALIBRE COMPLETO (DERECHO)	1					
14	4SV–W0057–00	.PISTON COMPLETO PINZA	1					
15	3MA–W0047–10	..JUEGO DE RETENES DE PINZA	1					
16	4SV–W0057–10	.PISTON COMPLETO PINZA	1					
17	3GM–W0047–10	..JUEGO DE RETENES DE PINZA	1					
18	5SL–W0045–00	.JUEGO DE COJIN DE FRENO	1					
19	4SV–25919–00	.SOPORTE DE PASTILLAS	1					
20	4SV–25924–00	.PASADOR	1					
21	3GM–25925–00	.PRESILLA	2					
22	5VS–W0048–00	.CJTO TORNILLO DE PURGA	1					
23	90105–10638	TORNILLO	4					

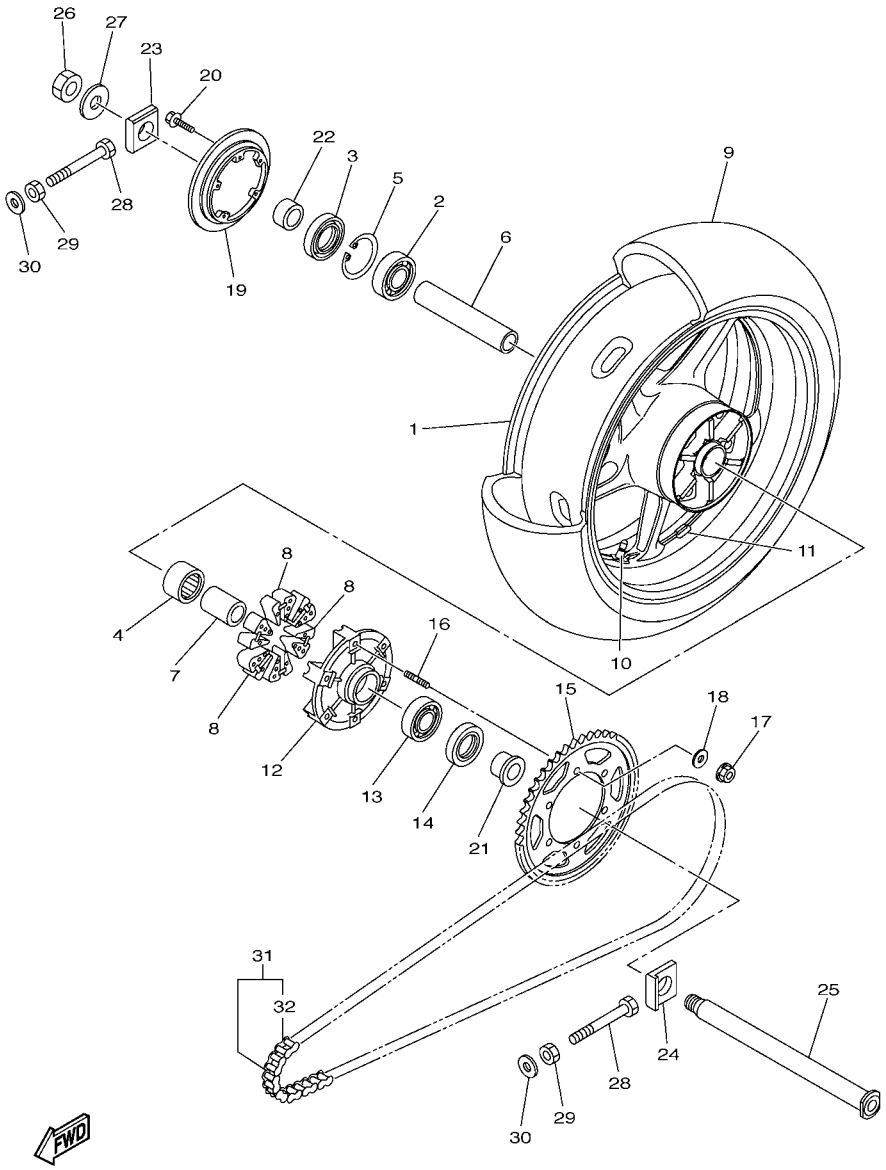

22CD300-K320

FIG. 32 RUEDA TRASERA

REF. Nº	CODIGO Nº	DESCRIPCION	22CF					OBSERVACIONES
1	5D0–25338–00–98	RUEDA FUNDIDA TRASERA	1					LGB
2	93306–20531	COJINETE	1					
3	93106–40013	SELLO ACEITE	1					
4	93317–33590	COJINETE	1					
5	93420–61M07	SEGURO	1					
6	90387–28018	ESPACIADOR	1					
7	2D1–25377–00	COLLAR DE RUEDA	1					
8	5LV–25364–00	AMORTIGUADOR	6					
9	94119–17062	NEUMATICO(190/50 ZR17M/C 73W)	1					DUNLOP
10	93900–00030	VALVULA DE ARO (TR412)	1					TAIHEIYO
11	5MT–25398–00	BALANCEADOR DE RUEDA (10G)	1					UN
	5MT–25398–10	BALANCEADOR DE RUEDA (20G)	1					UN
	5MT–25398–20	BALANCEADOR DE RUEDA (30G)	1					UN
12	2D1–25366–00	EMBRAGUE DE MASA	1					
13	93306–20531	COJINETE	1					
14	93106–40013	SELLO ACEITE	1					
15	2D1–25445–20	CORONA (45D)	1					
16	90116–10048	ESPARRAGO	6					
17	90185–10009	TUERCA AUTOBLOCANTE	6					
18	90201–10021	ARANDELA PLANA	6					
19	4P5–2537G–00	ROTOR DE SENSOR	1					
20	90105–05015	TORNILLO	5					
21	90387–28019	ESPACIADOR	1					
22	90387–28017	ESPACIADOR	1					
23	5VY–25388–00	TIRADOR DE CADENA 1	1					
24	5VY–25389–01	TIRADOR DE CADENA 2	1					
25	2D1–25381–00	EJE DE RUEDA	1					

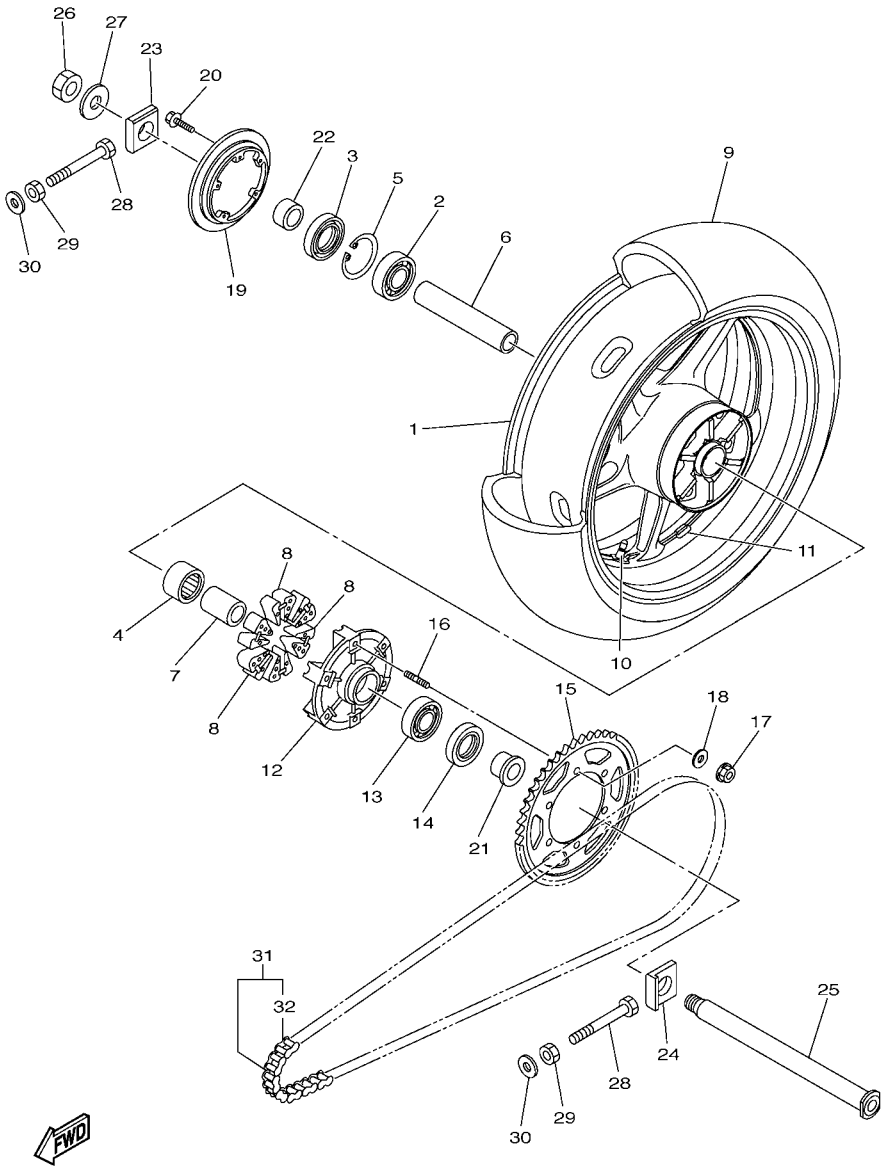

FIG. 32 RUEDA TRASERA

REF. Nº	CODIGO Nº	DESCRIPCION	22CF					OBSERVACIONES
26	90185–24008	TUERCA AUTOBLOCANTE	1					
27	90201–25020	ARANDELA PLANA	1					
28	90101–08013	TORNILLO	2					
29	95302–08600	TUERCA	2					
30	90201–08057	ARANDELA PLANA	2					
31	94582–10122	CADENA (DID50VA8-122LL)	1					
32	94682–05031	.JUNTA, DE CADENA(DID50VA8-ZJ)	1					

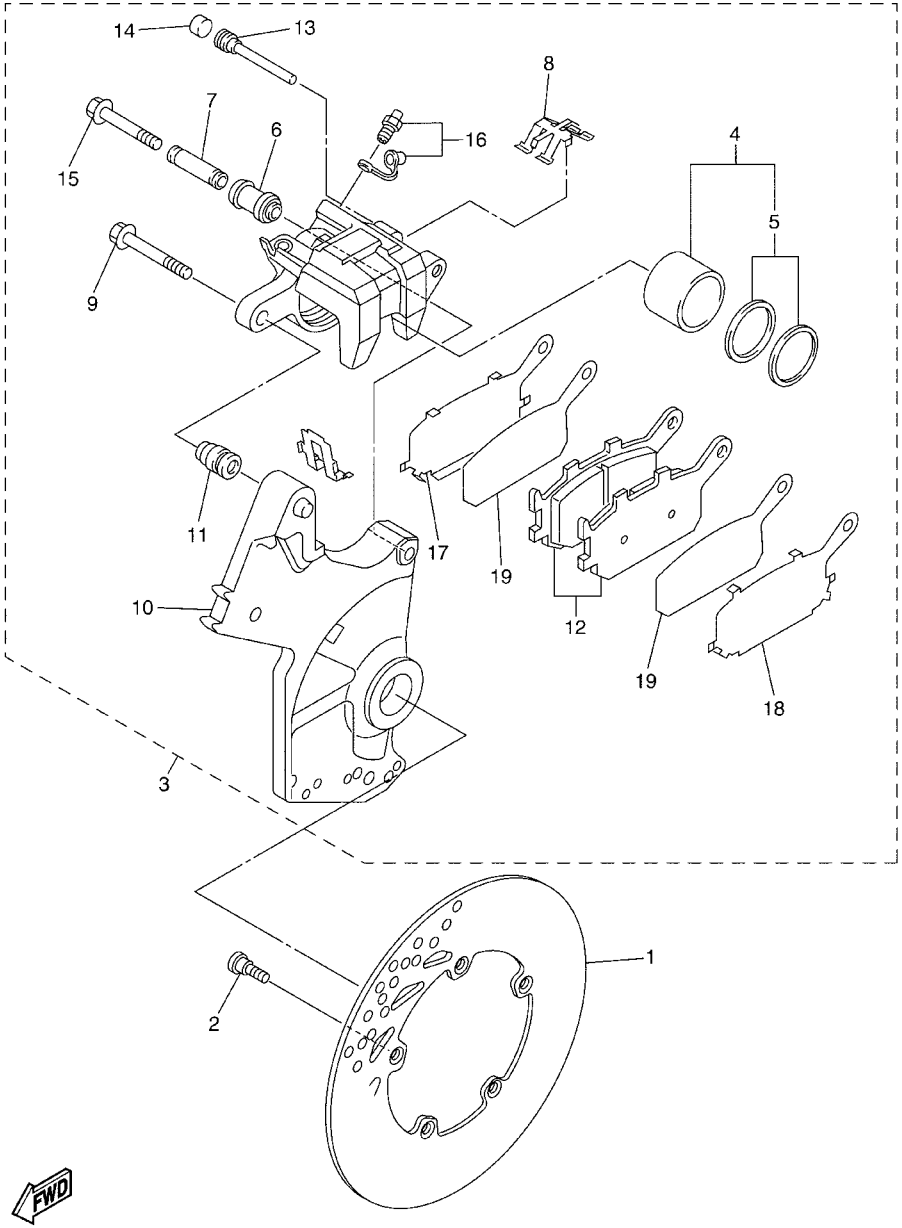

5D01300-F331

FIG. 33 CALIBRE FRENO TRASERA

REF. Nº	CODIGO Nº	DESCRIPCION	22CF					OBSERVACIONES
1	2D1–2582W–00	DISCO DE FRENO TRASEROS 2	1					
2	90149–08009	TORNILLO DE REGLAJE	5					
3	5D0–2580W–00	CALIBRE COMPLETO TRASEROS 2	1					
4	5SL–W0057–00	.PISTON COMPLETO PINZA	1					
5	5SL–W0047–00	..JUEGO DE RETENES DE PINZA	1					
6	5SL–25917–00	.FUNDA DE CALIBRE	1					
7	5SL–25838–00	.CASQUILLO DE CALIBRE	1					
8	5SL–25919–00	.SOPORTE DE PASTILLAS	1					
9	5SL–25914–00	.PASADOR	1					
10	5D0–25921–50	.MENSULA DE SOPORTE	1					
11	3JD–25917–00	.FUNDA DE CALIBRE	1					
12	5VX–W0046–00	.JUEGO DE PASTILLAS DE FRENO 2	1					
13	8CR–25924–00	.PASADOR	1					
14	5DH–25916–00	.TAPON	1					
15	5SL–25926–00	.PERNO	1					
16	8CR–W0048–00	.CJTO TORNILLO DE PURGA	1					
17	5SL–25827–00	.CUNA DE CALIBRE	1					
18	5SL–25827–10	.CUNA DE CALIBRE	1					
19	5SL–25828–00	.CUNA DE CALIBRE	2					

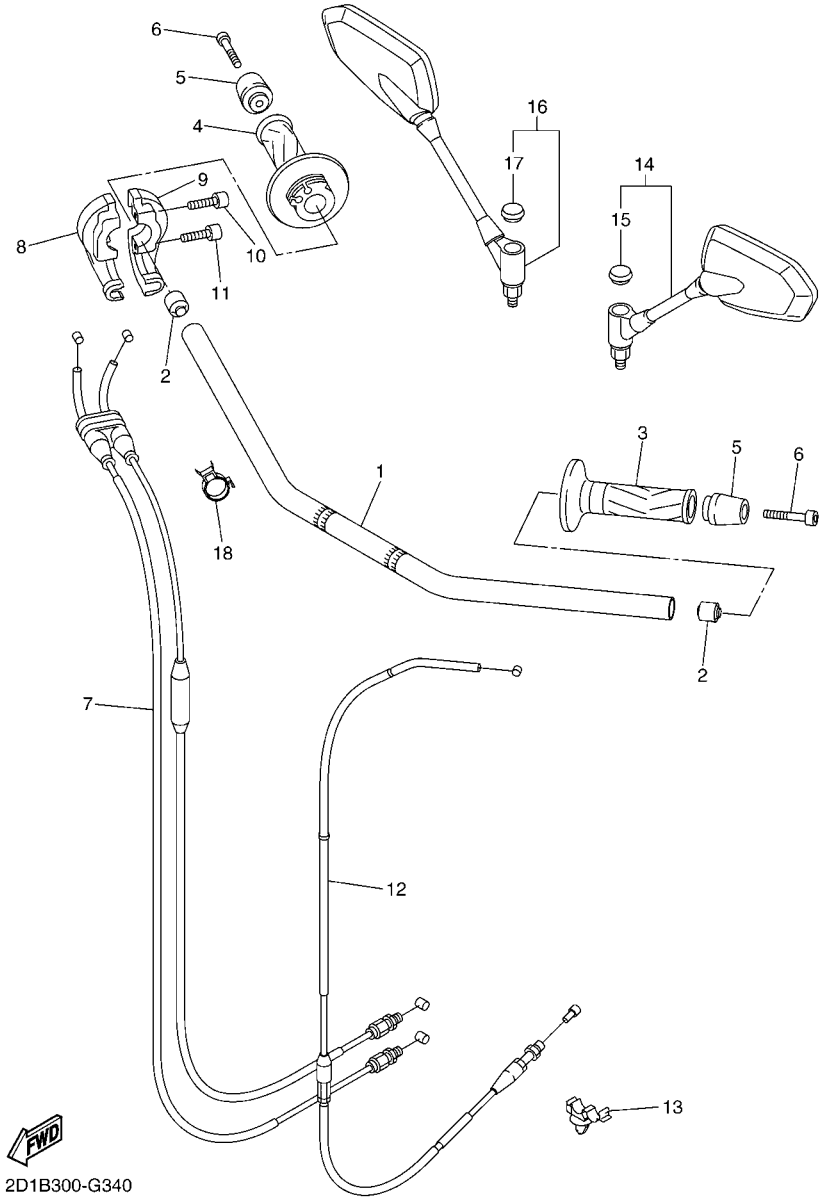

FIG. 34 MANILLAR & CABLE

REF. Nº	CODIGO Nº	DESCRIPCION	22CF					OBSERVACIONES
1	2D1–26111–11	MANUBRIO	1					
2	4JH–23434–00	SOPORTE DE AMORTIGUADOR	2					
3	4YR–26241–02	EMPUNADURA (IZQUIERDO)	1					
4	4YR–26240–02	EMPUNADURA COMPLETA	1					
5	2D1–26246–00	EXTREMO DE EMPUNADURA	2					
6	91317–06050	PERNO	2					
7	2D1–26302–00	CABLE DE ACELERADOR COMPLETO	1					
8	3LN–26281–01	TAPA DE EMPUNADURA SUPERIOR	1					
9	4BP–26282–00	TAPA, EMPUNADURA PLATINA	1					
10	91317–05020	PERNO	1					
11	91317–05025	PERNO	1					
12	2D1–26335–00	CABLE DE EMBRAGUE	1					
13	90464–10008	BRIDA	1					
14	5YU–26280–30	ESPEJO COMPLETO (IZQUIERDO)	1					
15	5PS–26133–10	.TAPA	1					
16	5YU–26290–30	ESPEJO COMPLETO (DERECHO)	1					
17	5PS–26133–10	.TAPA	1					
18	90464–20191	BRIDA	1					

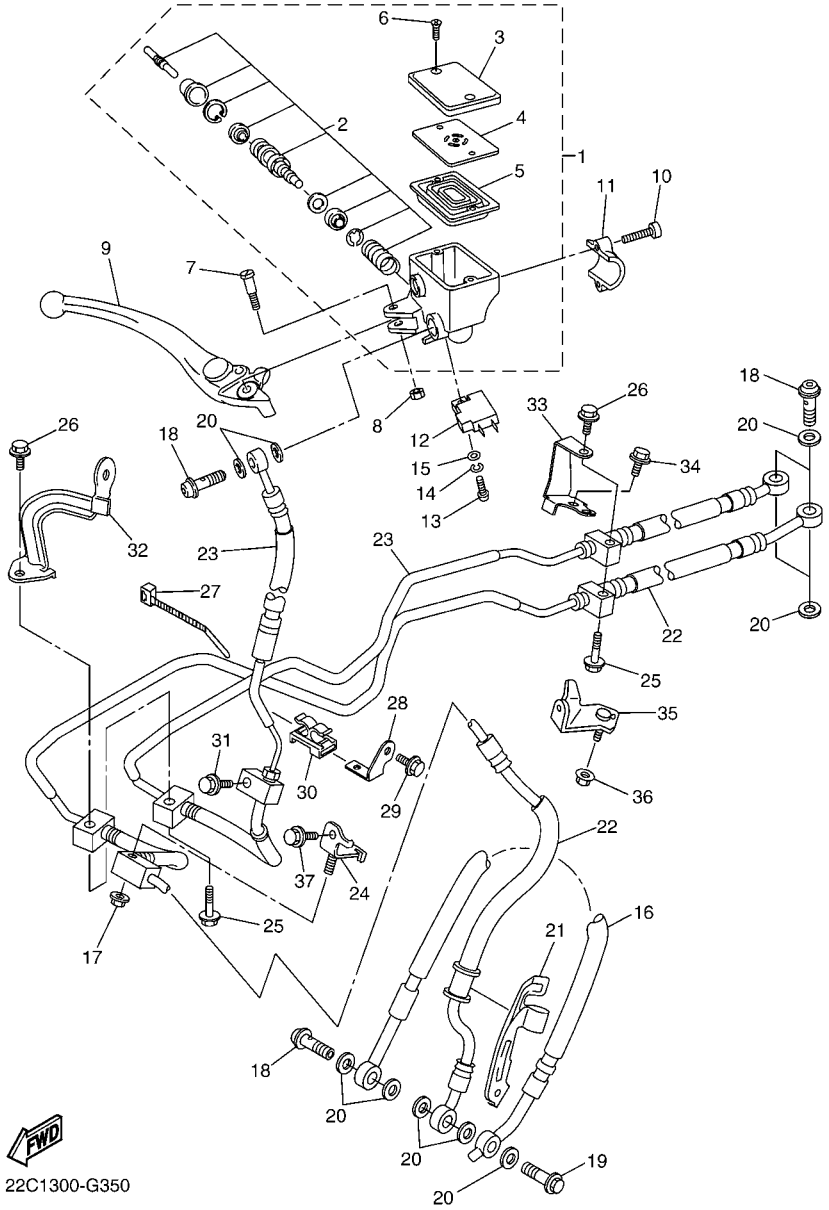

FIG. 35 CILINDRO MAESTRO DELANTERO

REF. Nº	CODIGO Nº	DESCRIPCION	22CF					OBSERVACIONES
1	22C–W2587–00	CILINDRO MAESTRO SUB COMPLET	1					
2	2D1–W0041–00	.JUEGO DE CILINDRO MAESTRO	1					
3	5VS–25852–00	.TAPA DE TANQUE DE RESERVA	1					
4	5VS–25855–00	.BUJE DE DIAFRAGMA	1					
5	20S–25854–00	.EMPAQUE,DIAFRAGMA	1					
6	5VS–2589H–00	.TORNILLO	2					
7	5VS–2589F–00	PERNO DE PALANCA	1					
8	95617–06100	TUERCA U	1					
9	5VS–83922–00	PALANCA 2	1					
10	5VS–26332–00	PERNO	2					
11	5VS–25867–00	SOPORTE DE CILINDRO MAESTRO	1					
12	4HM–83980–00	INTERRUP. DE PARADA DELANTERO	1					
13	98502–04012	TORNILLO	1					
14	92902–04100	ARANDELA	1					
15	92902–04600	ARANDELA	1					
16	22C–25872–00	MANGUERA DE FRENO 1	1					
17	95707–06500	TUERCA DE BRIDA	1					
18	90401–10172	PERNO DE UNION	4					
19	90401–10038	PERNO DE UNION	1					
20	90430–10005	JUNTA	11					
21	22C–25875–00	SOPORTE DE MANGUERA FRENO 1	1					
22	22C–2584A–00	MANGUERA DE FRENO	1					
23	22C–2584B–00	MANGUERA DE FRENO	1					
24	22C–2588F–00	SOPORTE DE MANGUERA FRENO 5	1					
25	90105–06400	TORNILLO	2					
26	95027–06010	PERNO, DE BRIDA	2					
27	90465–10098	BRIDA	1					

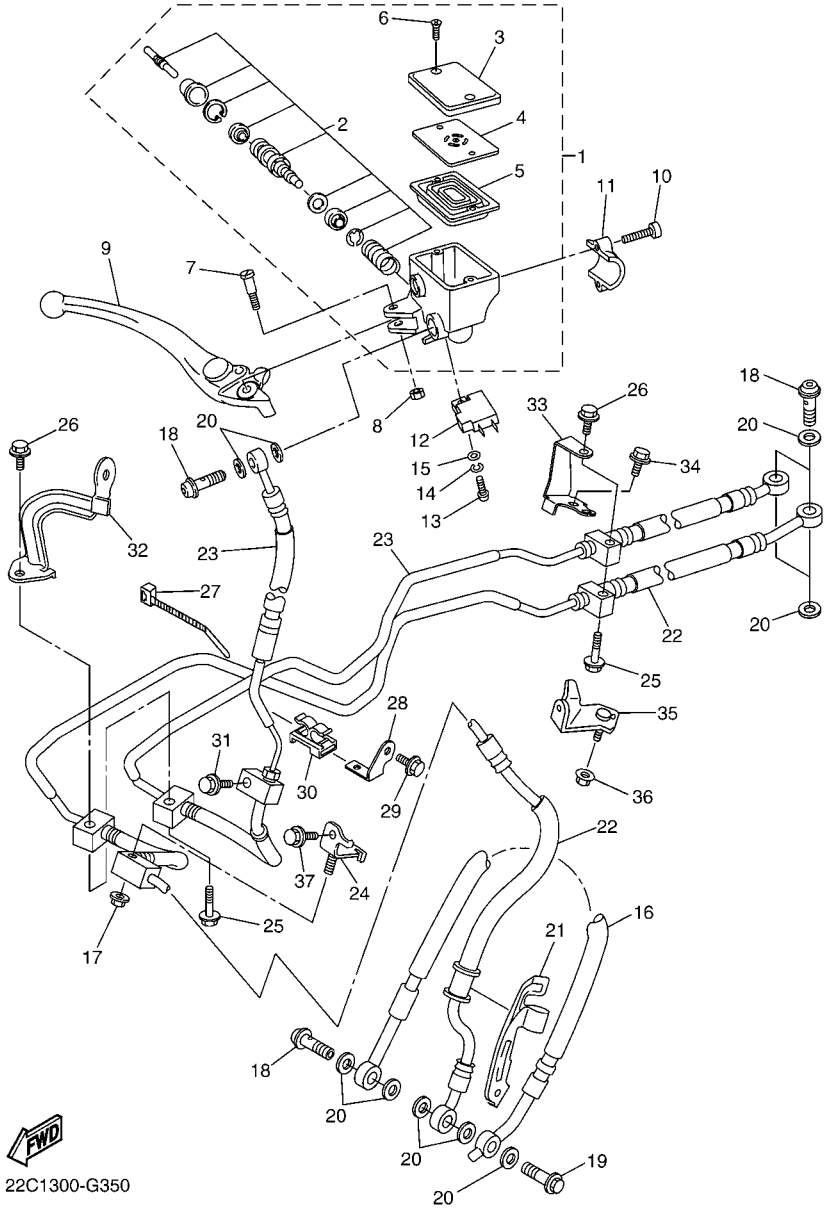

FIG. 35 CILINDRO MAESTRO DELANTERO

REF. Nº	CODIGO Nº	DESCRIPCION	22CF					OBSERVACIONES
28	22C–2612E–00	SOPORTE	1					
29	95807–06010	TORNILLO	1					
30	90464–07013	BRIDA	1					
31	95027–06025	PERNO, DE BRIDA	1					
32	22C–2612K–00	SOPORTE 2	1					
33	5D0–26292–00	SOPORTE	1					
34	95027–06020	PERNO, DE BRIDA	1					
35	2D1–23377–00	SOPORTE DE BOCINA	1					
36	95707–06500	TUERCA DE BRIDA	1					
37	95817–06012	TORNILLO	1					

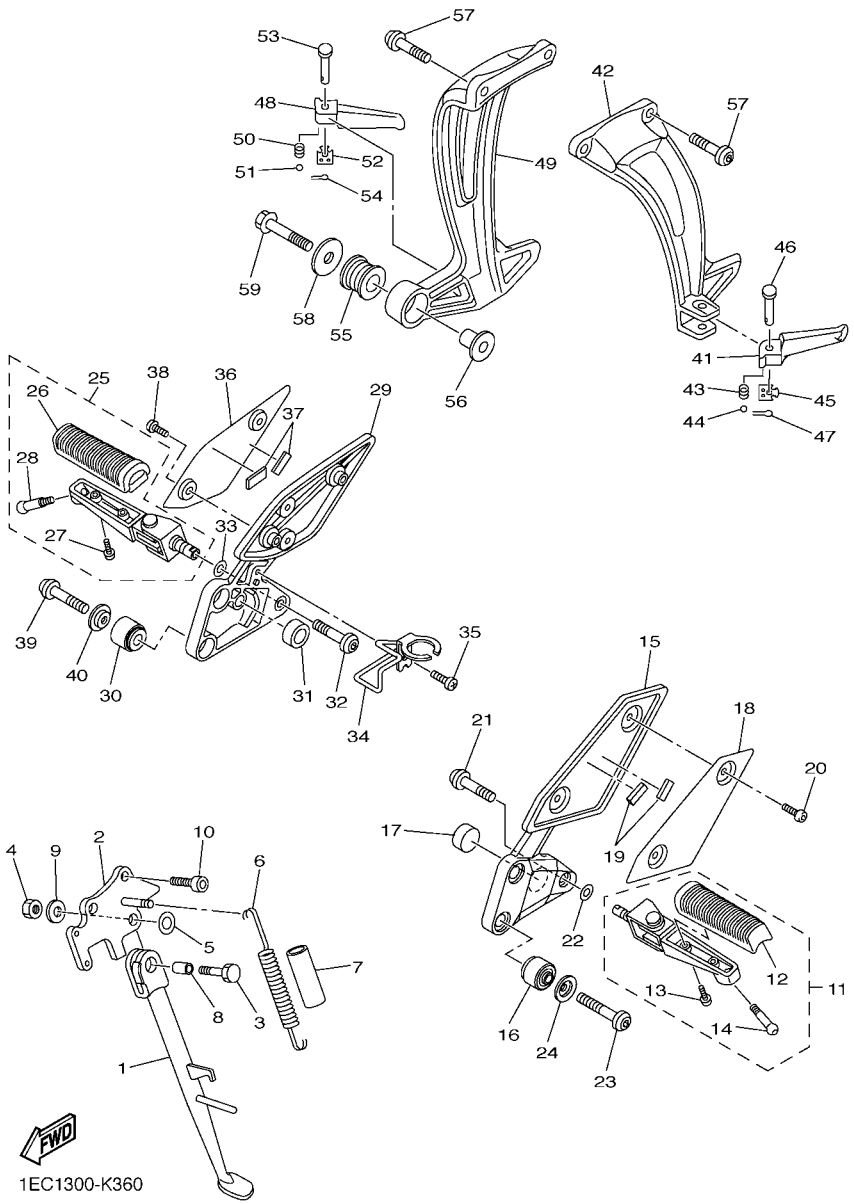

FIG. 36 SOPORTE & APOYAPIE

REF. Nº	CODIGO Nº	DESCRIPCION	22CF					OBSERVACIONES
1	39P–27311–00	PUNTAL LATERAL	1					
2	2D1–27321–00	SOPORTE DE PUNTAL LATERAL	1					
3	90101–10025	TORNILLO	1					
4	90185–10023	TUERCA AUTOBLOCANTE	1					
5	90201–16027	ARANDELA PLANA	1					
6	90506–18020	RESORTE DE TENSION	1					
7	90445–19002	TUBO (L60)	1					
8	90387–10050	ESPACIADOR	1					
9	90201–10035	ARANDELA PLANA	1					
10	90110–10028	TORNILLO ALLEN	2					
11	2D1–27410–00	APOYAPIE DELANTERO (MI)	1					
12	4BP–27413–00	.CUBIERTA DE APOYAPIE	1					
13	90157–05025	.TORNILLO CABEZA CONICA PLANA	2					
14	90109–08174	.PERNO	1					
15	2D1–27442–11	SOPORTE 2	1					
16	1NL–27424–00	AMORTIGUADOR DE APOYAPIE 2	2					
17	5VX–27114–00	TOPE DE PUNTAL PRINCIPAL	1					
18	2D1–27486–00	CUBIERTA 1	1					
19	1HX–27415–00	PLACA	2					
20	90111–05015	TORNILLO	2					
21	90111–10039	TORNILLO	1					
22	90206–17084	ARANDELA ONDULADA	1					
23	90110–08071	TORNILLO ALLEN	2					
24	90209–08295	ARANDELA DE SEPARACION	2					
25	2D1–27420–00	APOYAPIE DELANTERO (MD)	1					
26	4BP–27413–00	.CUBIERTA DE APOYAPIE	1					
27	90157–05025	.TORNILLO CABEZA CONICA PLANA	2					

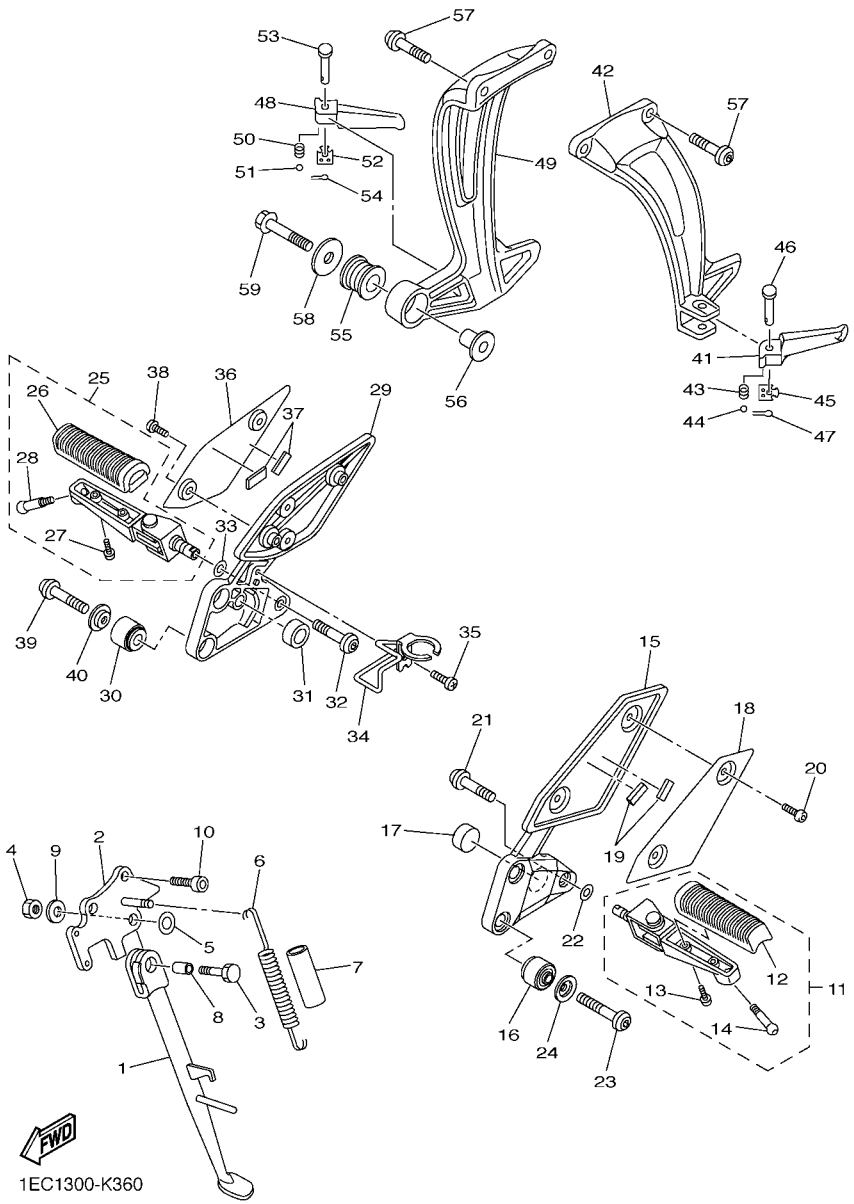

FIG. 36 SOPORTE & APOYAPIE

REF. Nº	CODIGO Nº	DESCRIPCION	22CF					OBSERVACIONES
28	90109–08174	.PERNO	1					
29	2D1–27443–11	SOPORTE 3	1					
30	1NL–27424–00	AMORTIGUADOR DE APOYAPIE 2	2					
31	5VX–27114–00	TOPE DE PUNTAL PRINCIPAL	1					
32	90109–103A9	PERNO	1					
33	90206–17084	ARANDELA ONDULADA	1					
34	2D1–2144G–00	SOPORTE DE INTERRUPTOR	1					
35	98507–06008	TORNILLO DE CABEZA PLANA	1					
36	2D1–27487–00	CUBIERTA 2	1					
37	1HX–27415–00	PLACA	2					
38	90111–05015	TORNILLO	2					
39	90110–08071	TORNILLO ALLEN	2					
40	90209–08295	ARANDELA DE SEPARACION	2					
41	3VR–27431–01	APOYAPIE POSTERIOR 1	1					
42	2D1–2741L–10	MENSULA 4	1					
43	90501–12743	RESORTE DE COMPRESION	1					
44	93501–04011	BOLA	1					
45	5VX–27437–00	ARANDELA ESPECIAL	1					
46	91702–08040	PASADOR DE ADRAZADERA	1					
47	91401–25015	CHAVETA	1					
48	3VR–27441–01	APOYAPIE POSTERIOR 2	1					
49	2D1–2742L–10	MENSULA 5	1					
50	90501–12743	RESORTE DE COMPRESION	1					
51	93501–04011	BOLA	1					
52	5VX–27437–00	ARANDELA ESPECIAL	1					
53	91702–08040	PASADOR DE ADRAZADERA	1					
54	91401–25015	CHAVETA	1					

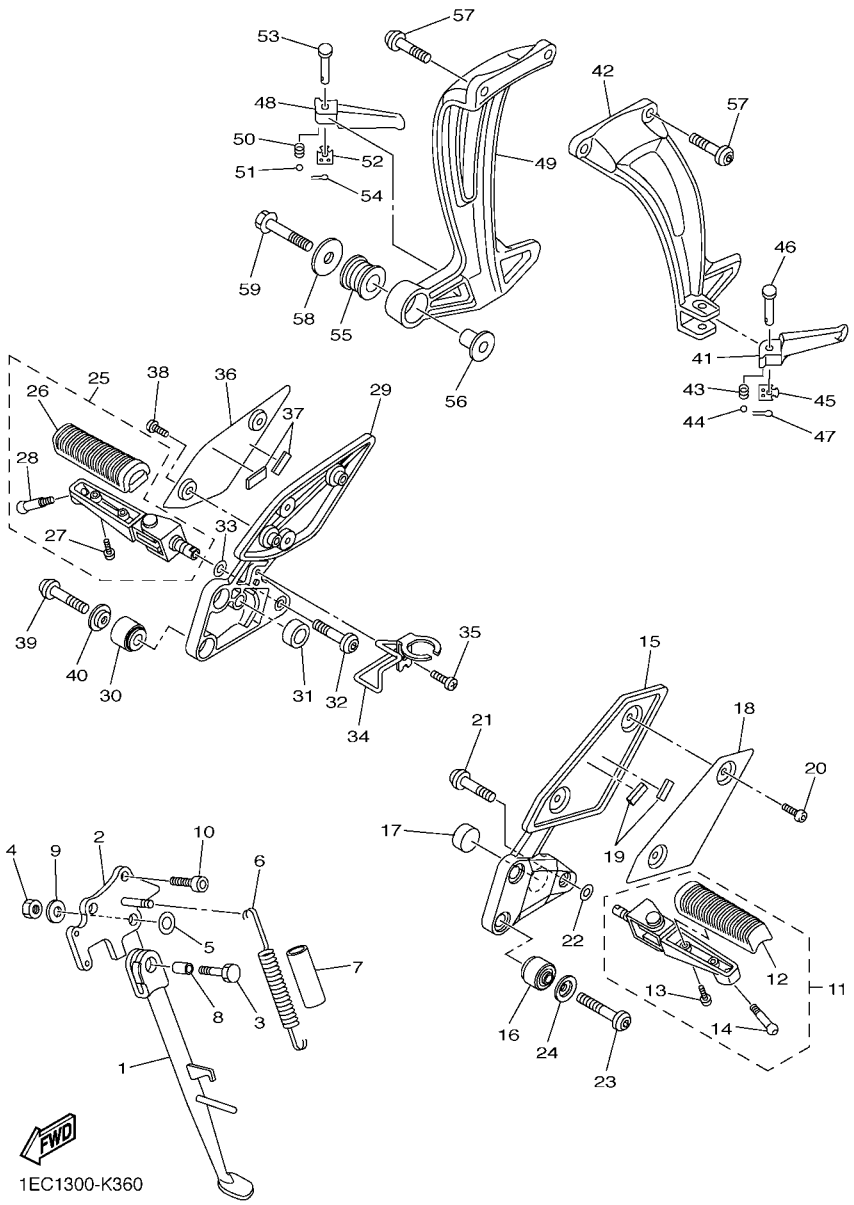

FIG. 36 SOPORTE & APOYAPIE

REF. Nº	CODIGO Nº	DESCRIPCION	22CF					OBSERVACIONES
55	36Y–27424–01	AMORTIGUADOR DE APOYAPIE 2	1					
56	90387–10636	ESPACIADOR	1					
57	90109–085G6	PERNO	4					
58	90201–10669	ARANDELA PLANA	1					
59	95814–10040	TORNILLO	1					

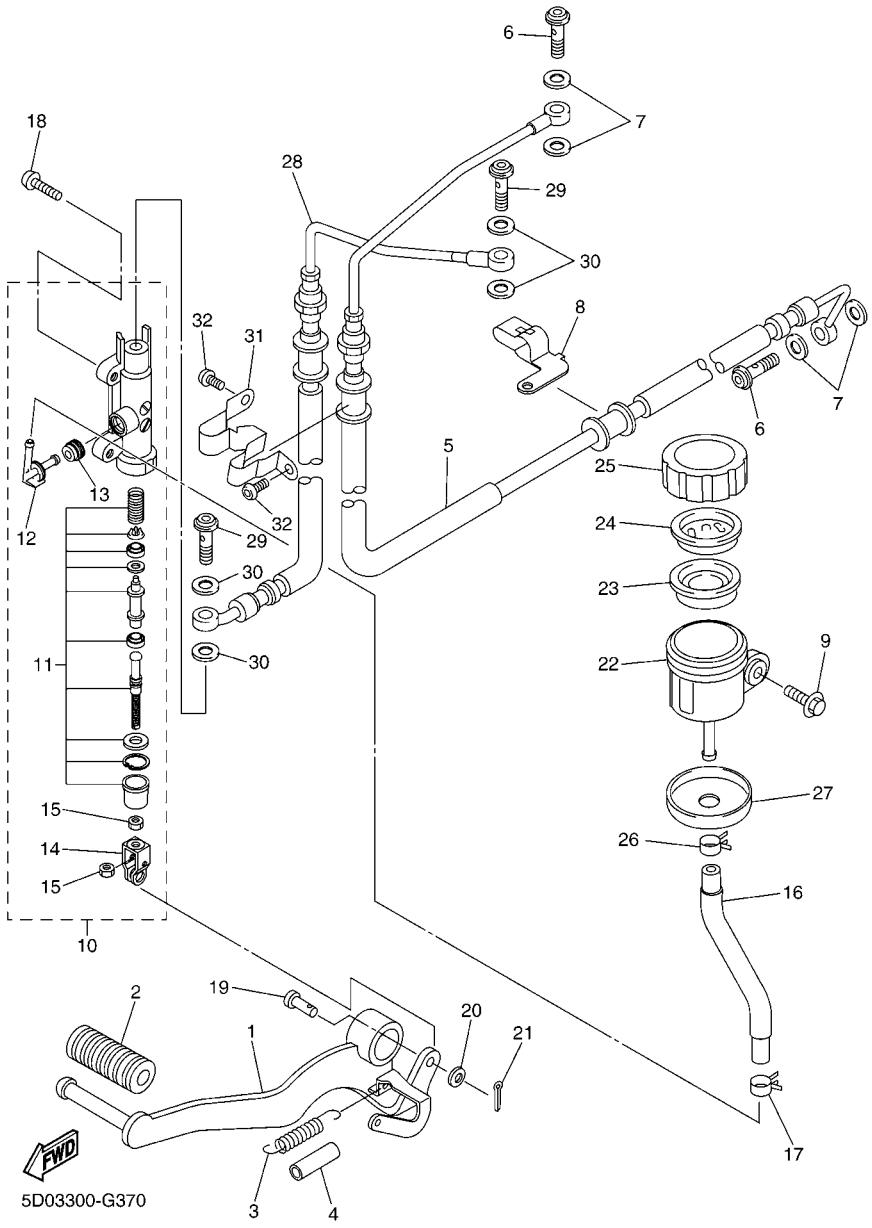

FIG. 37 CILINDRO MAESTRO TRASERO

REF. Nº	CODIGO Nº	DESCRIPCION	22CF					OBSERVACIONES
1	2D1–27211–00	PEDAL DE FRENO	1					
2	5EB–18113–00	FUNDA DEL PEDAL DEL CAMBIO	1					
3	90506–20014	RESORTE DE TENSION	1					
4	90446–15386	TUBO RESEIRADERO	1					
5	5D0–25874–00	MANGUERA DE FRENO	1					
6	90401–10172	PERNO DE UNION	2					
7	90430–10005	JUNTA	4					
8	5D0–25886–00	SOPORTE DE MANGUERA FRENO	1					
9	90119–05021	TORNILLO CON ARANDELA	1					
10	4P5–2583V–00	CILINDRO, MAESTRO TRASERO	1					
11	5VX–W0042–51	.JUEGO DE CILINDRO MAESTRO	1					
12	2D1–2582A–00	.CONECTOR	1					
13	4BP–2585F–01	.ANILLO O	1					
14	4BP–27222–02	.UNION	1					
15	90170–08010	.TUERCA	2					
16	5D0–25895–00	MANGUERA DE TANQUE DE RESERVA	1					
17	90467–120A3	PRESILLA	1					
18	92014–08020	PERNO	2					
19	90240–08124	PASADOR CON HOYO	1					
20	90201–08083	ARANDELA PLANA	1					
21	91401–20012	CHAVETA	1					
22	2D1–25894–00	TANQUE DE RESERVA	1					
23	5SL–25854–00	DIAFRAGMA TANQUE RESERVA	1					
24	5SL–25855–00	BUJE DE DIAFRAGMA	1					
25	5SL–25852–00	TAPA DE TANQUE DE RESERVA	1					
26	90467–12191	PRESILLA	1					
27	5D0–2583H–00	FUNDA	1					

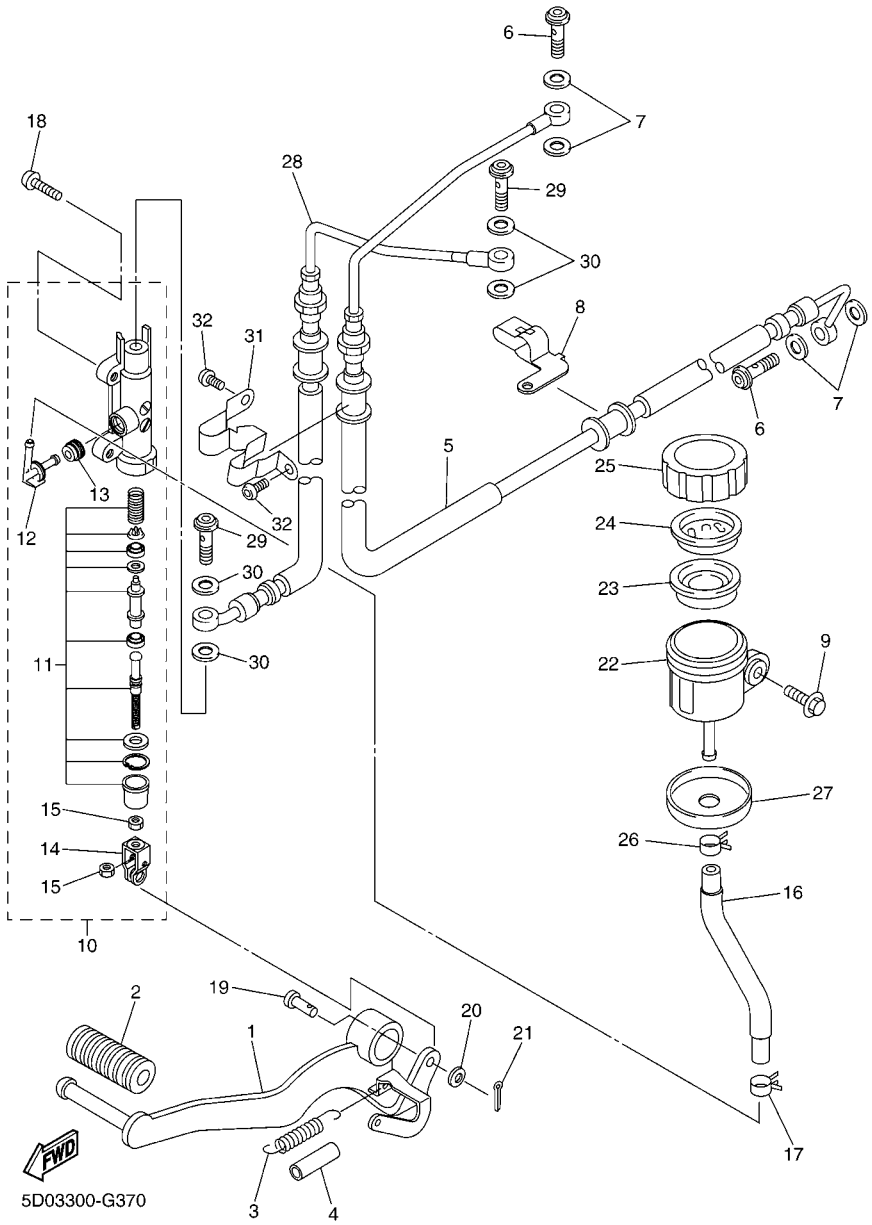

FIG. 37 CILINDRO MAESTRO TRASERO

REF. Nº	CODIGO Nº	DESCRIPCION	22CF					OBSERVACIONES
28	5D0–2581J–00	MANGUERA, DE FRENO 4	1					
29	90401–10172	PERNO DE UNION	2					
30	90430–10005	JUNTA	4					
31	5D0–2587A–00	SOPORTE DE MANGUERA FRENO	1					
32	90111–06085	TORNILLO	2					

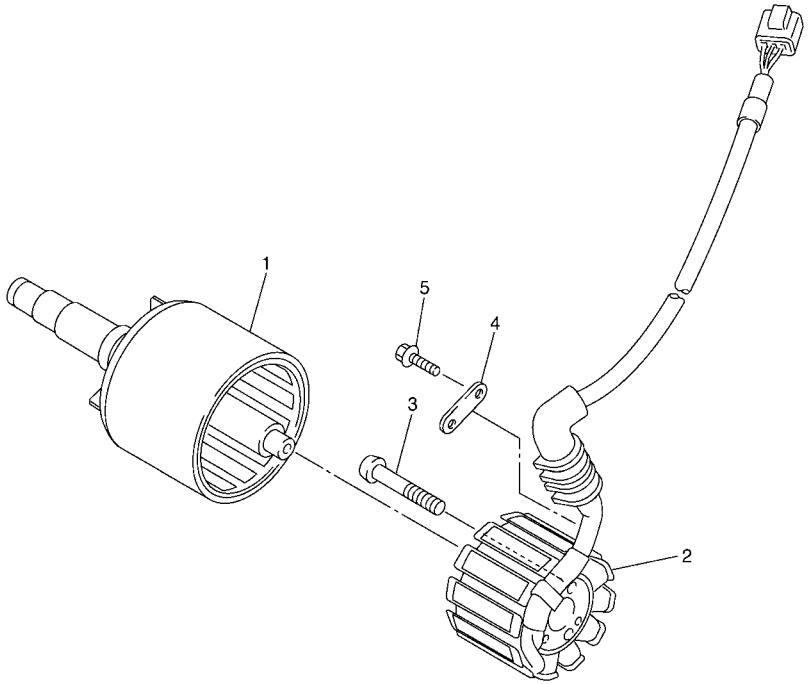

5VY1300-C400

FIG. 38 GENERADOR

REF. Nº	CODIGO Nº	DESCRIPCION	22CF					OBSERVACIONES
1	5VY–81450–00	ROTOR COMPLETO	1					
2	22C–81410–10	ESTATOR COMPLETO	1					
3	90149–06067	TORNILLO DE REGLAJE	3					
4	4C8–15191–00	PLACA	1					
5	90105–06078	TORNILLO	1					

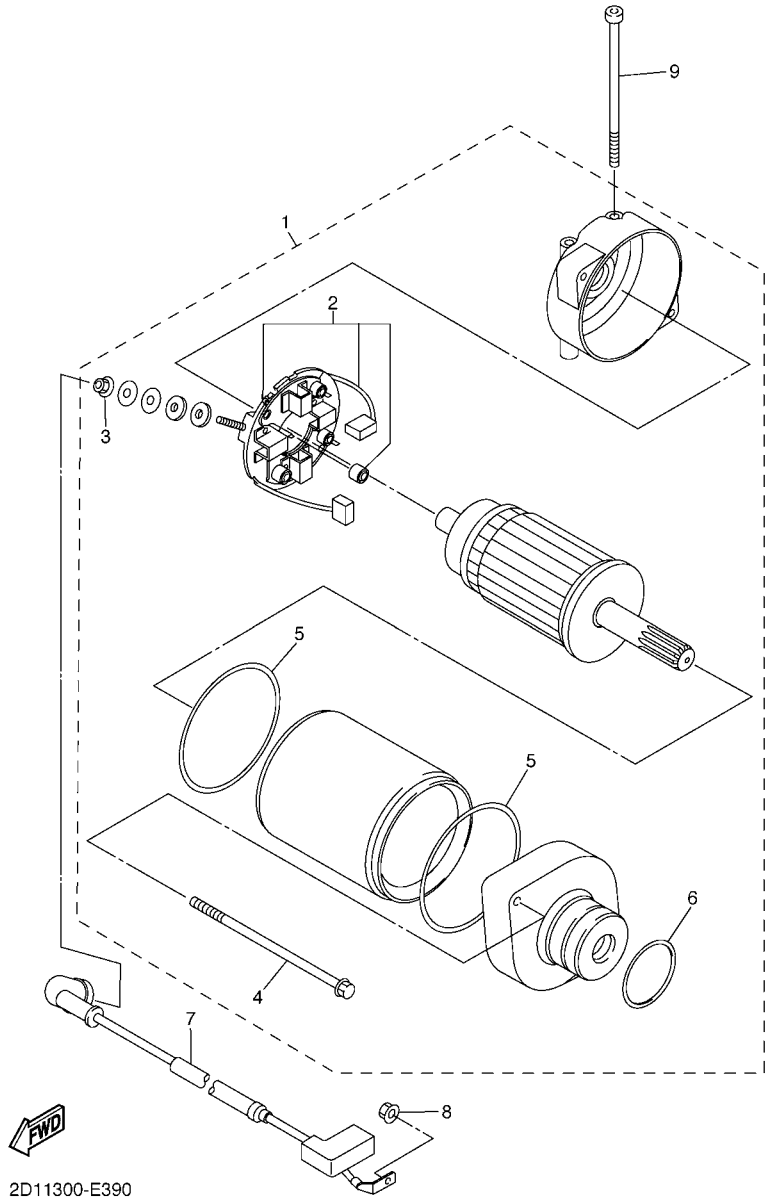

FIG. 39 MOTOR DE ARRANQUE

REF. Nº	CODIGO Nº	DESCRIPCION	22CF					OBSERVACIONES
1	2D1–81890–00	MOTOR DE ARRANQUE COMPLETO	1					
2	3AJ–81801–00	.JUEGO DE ESCOBILLA	1					
3	4XV–8182A–00	.TUERCA	1					
4	2D1–81826–00	.PERNO	2					
5	11H–81844–00	.EMPAQUE	2					
6	1FK–81847–00	.ANILLO GOMA	1					
7	2D1–81815–00	CABLE, MOTOR DE ARRANQUE	1					
8	4XV–8182A–00	TUERCA	1					
9	91312–06080	TORNILLO	2					

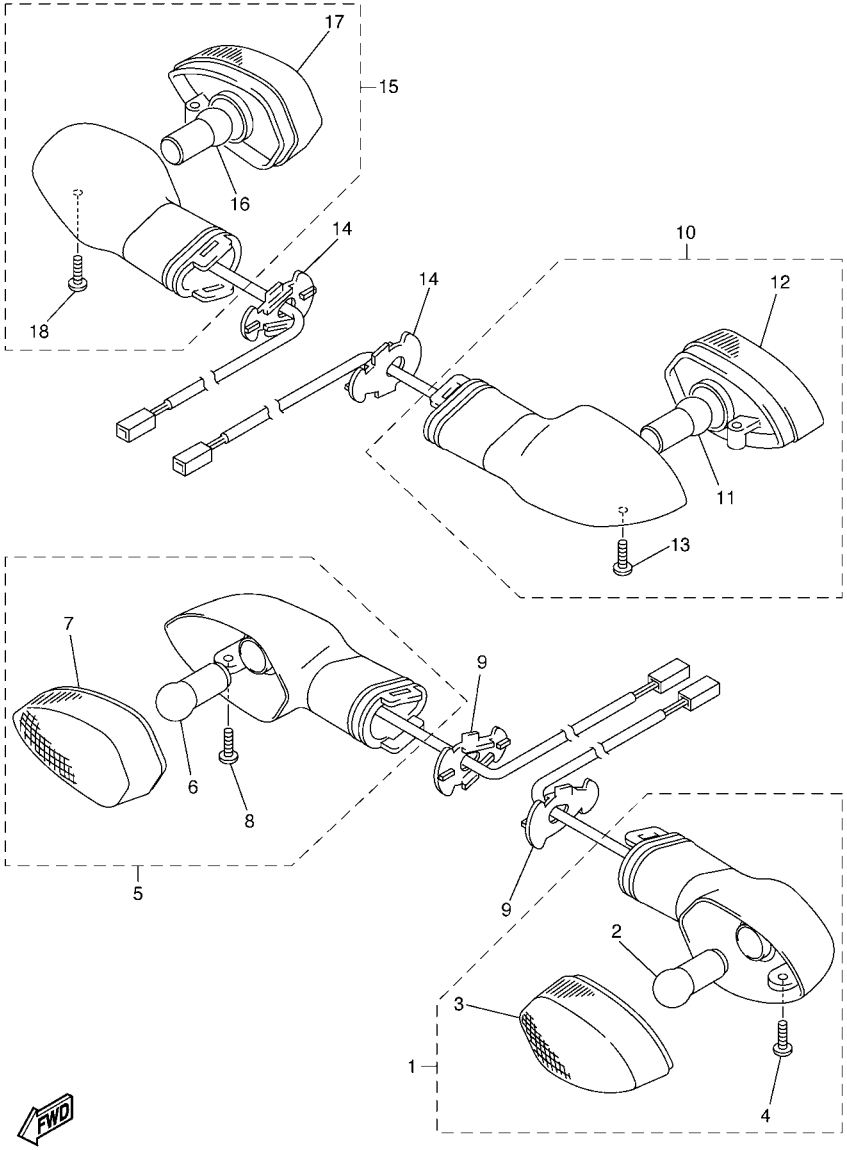

FIG. 40 LUZ DE DESTELLADOR

REF. Nº	CODIGO Nº	DESCRIPCION	22CF					OBSERVACIONES
1	5PW–83310–01	DESTELLADOR DE LUZ DELANT.	1					
2	1KH–83311–00	.BOMBILLA (12V-10W)	1					
3	5PW–8333A–00	.LENTES COMPLETO 1	1					
4	97706–04012	.TORNILLO, ROSCA CHAPA	1					
5	5PW–83320–01	DESTELLADOR DE LUZ DELANT.	1					
6	1KH–83311–00	.BOMBILLA (12V-10W)	1					
7	5PW–8334A–00	.LENTES COMPLETO 2	1					
8	97706–04012	.TORNILLO, ROSCA CHAPA	1					
9	2D1–83318–00	SOPORTE DE DESTELLADOR 1	2					
10	2D1–83330–20	DESTELLADOR DE LUZ TRAS.COMPL.	1					
11	1KH–83311–00	.BOMBILLA (12V-10W)	1					
12	5PW–8334A–00	.LENTES COMPLETO 2	1					
13	97706–04012	.TORNILLO, ROSCA CHAPA	1					
14	2D1–83318–00	SOPORTE DE DESTELLADOR 1	2					
15	2D1–83340–20	DESTELLADOR DE LUZ TRAS.COMPL.	1					
16	1KH–83311–00	.BOMBILLA (12V-10W)	1					
17	5PW–8333A–00	.LENTES COMPLETO 1	1					
18	97706–04012	.TORNILLO, ROSCA CHAPA	1					

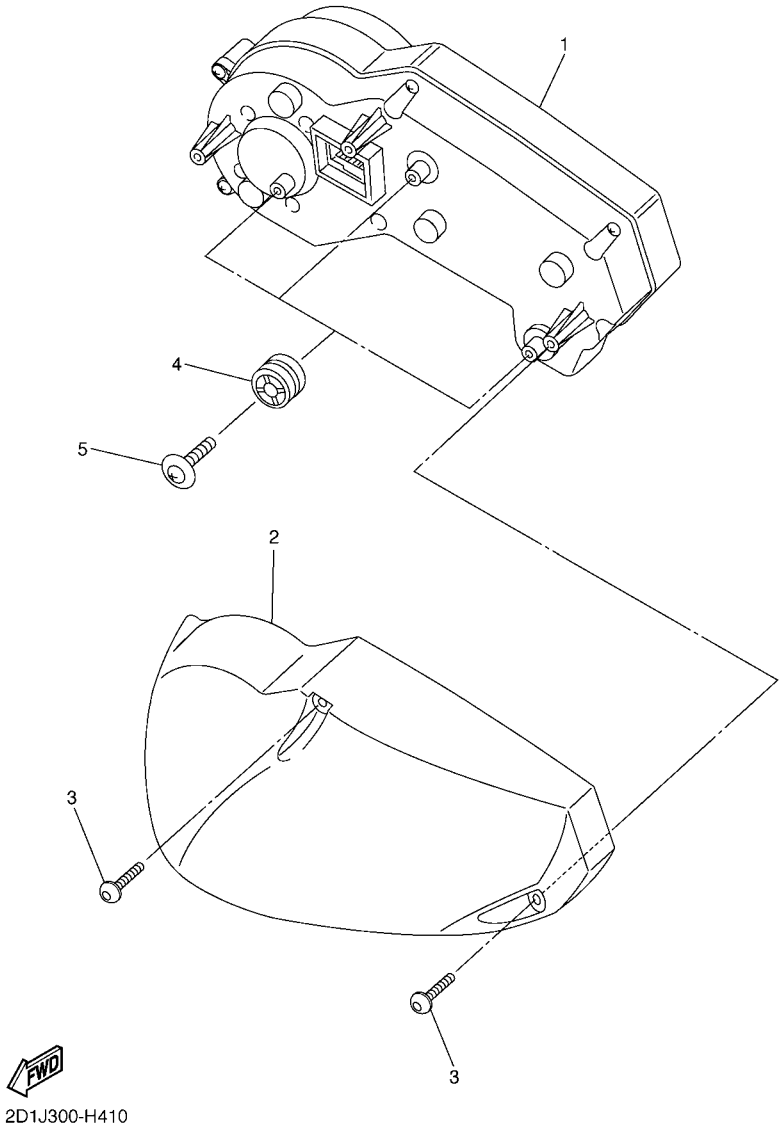

FIG. 41 MEDIDOR

REF. Nº	CODIGO Nº	DESCRIPCION	22CF					OBSERVACIONES
1	22C–83500–00	VELOCIMETRO COMPLETO (KM/H)	1					
2	2D1–83559–00	CUBIERTA DE MEDIDOR	1					
3	90167–05076	TORNILLO DE ROSCA HEMBRA	3					
4	4XV–83513–00	AMORTIGUADOR	3					
5	90164–05001	TORNILLO ROSCA HEMBRA	3					

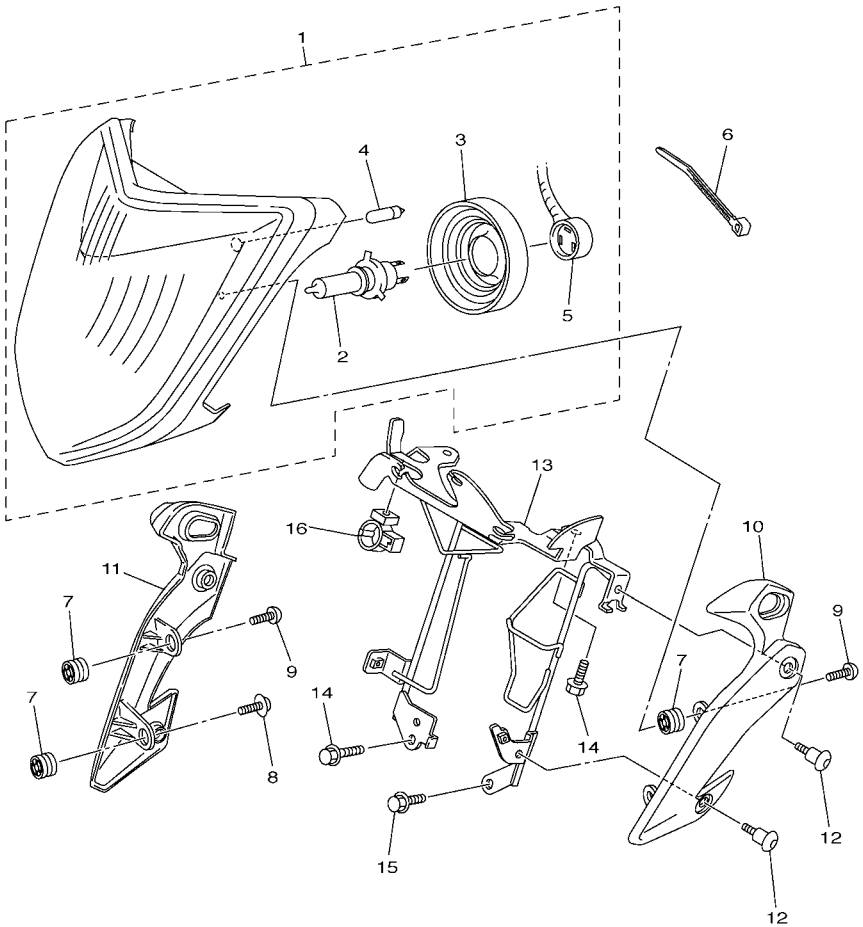

22CD300-K420

FIG. 42 FARO DELANTERO

REF. Nº	CODIGO Nº	DESCRIPCION	22CF					OBSERVACIONES
1	2D1–84300–00	FARO DELANTERO COMPLETO	1					
2	4K0–84314–G0	.BOMBILLA (12V 60/55W HALOGEN)	1					
3	5JW–84397–00	.CUBIERTA DE ENCASTRE	1					
4	5DM–84347–00	.AMPOLLETA (12V-5W)	1					
5	2D1–84359–00	.CABLE DE FARO DELANTERO	1					
6	90465–10098	BRIDA	1					
7	4XV–83513–00	AMORTIGUADOR	4					
8	90164–05001	TORNILLO ROSCA HEMBRA	2					
9	97702–50014	TORNILLO ROSCA HEMBRA	4					
10	2D1–23121–00–P0	CUBIERTA SUPERIOR 1	1					UR MBL2 PARA SMX
	2D1–23121–00–P4	CUBIERTA SUPERIOR 1	1					UR PARA BWC1
11	2D1–23131–00–P0	CUBIERTA SUPERIOR 2	1					UR MBL2 PARA SMX
	2D1–23131–00–P4	CUBIERTA SUPERIOR 2	1					UR PARA BWC1
12	90109–06078	PERNO	4					
13	22C–283E0–00	SOPORTE COMPLETO ,1	1					
14	90105–06085	TORNILLO	3					
15	90105–06174	TORNILLO	1					
16	90464–15192	BRIDA	1					

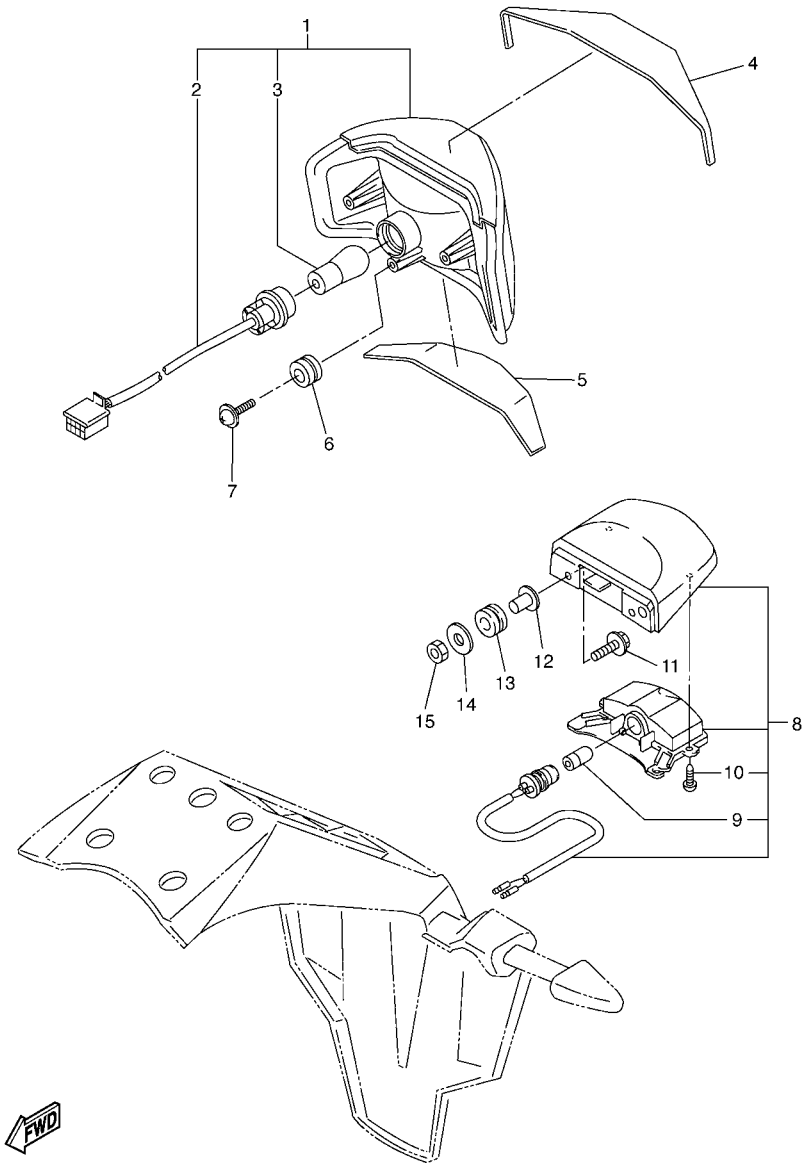

FIG. 43 LUZ DE COLA

REF. Nº	CODIGO Nº	DESCRIPCION	22CF					OBSERVACIONES
1	2D1–84710–00	UNIDAD FARO TRASERO COMPL.	1					
2	2D1–84735–00	.CABLE COMPLETA	1					
3	1A2–84714–41	.AMPOLLETA (12V-21/5W)	1					
4	2D1–84736–00	AMORTIGUADOR DE COLA	1					
5	2D1–84737–00	AMORTIGUADOR, TRASERO 2	1					
6	90480–18276	TAPON	3					
7	90164–05001	TORNILLO ROSCA HEMBRA	3					
8	2D1–84745–00	UNIDAD DE LUZ DE LICENCIA COMP	1					
9	4HC–84744–00	.BOMBILLA (12V-5W)	1					
10	97706–04012	.TORNILLO, ROSCA CHAPA	2					
11	90159–05035	TORNILLO CON VALONA	2					
12	90387–05042	ESPACIADOR	2					
13	90480–11009	TAPON	2					
14	92902–05200	ARANDELA	2					
15	95602–05100	TUERCA U	2					

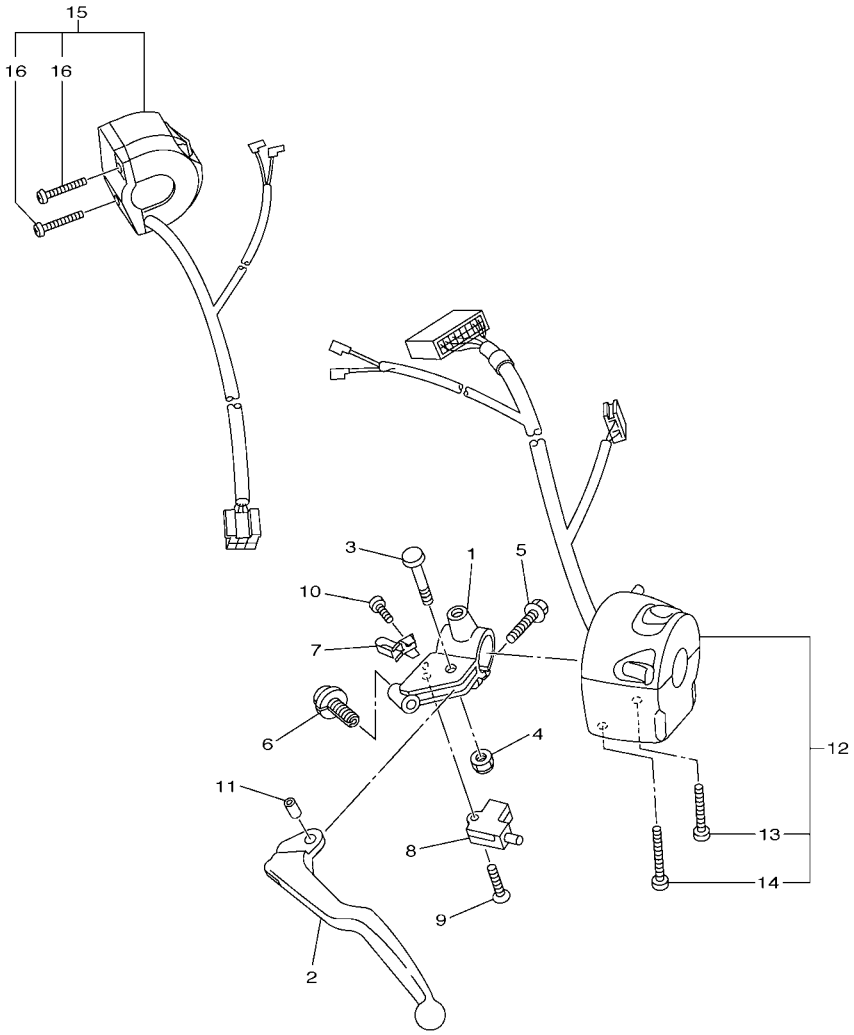

1EC1300-K440

FIG. 44 INTERRUPTOR DE MANILLAR&PALANC

REF. Nº	CODIGO Nº	DESCRIPCION	22CF					OBSERVACIONES
1	1B3–82911–00	SOPORTE DE LEVA 1	1					
2	4XV–83912–11	PALANCA 1	1					
3	4XV–83945–00	PERNO DE PALANCA	1					
4	95607–06200	TUERCA DE AUTO-CIERRE	1					
5	95027–06020	PERNO, DE BRIDA	1					
6	5LV–83951–00	PERNO DE CABLE DE AJUSTE	1					
7	4XV–83929–00	PLACA DE RESORTE	1					
8	3YX–82917–01	INTERRUPTOR	1					
9	98704–03020	TORNILLO DE CABEZA PLANA	1					
10	98507–04010	TORNILLO DE CABEZA PLANA	1					
11	5JJ–83913–00	COLLAR DE PALANCA 1	1					
12	2D1–83969–00	INTERRUPTOR DE MANIJA 5	1					
13	98507–05030	.TORNILLO DE CABEZA PLANA	1					
14	98507–05045	.TORNILLO DE CABEZA PLANA	1					
15	2D1–83975–00	INTERRUPTOR DE MANIJA 2	1					
16	98507–05022	.TORNILLO DE CABEZA PLANA	2					

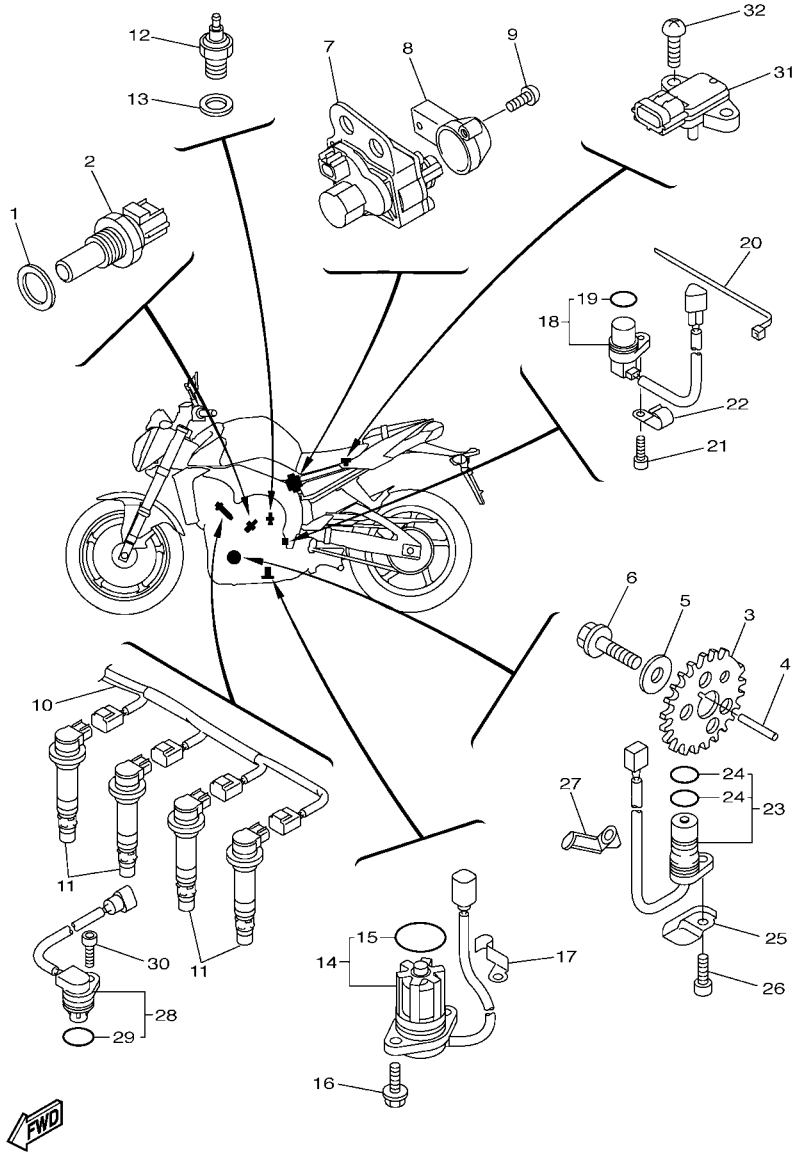

2D1J300-H450

FIG. 45 EQUIPO ELECTRICO 1

REF. Nº	CODIGO Nº	DESCRIPCION	22CF					OBSERVACIONES
1	90201–12790	ARANDELA PLANA	1					
2	8CC–85790–01	TERMICA SENSORIO	1					
3	2D1–81673–00	ROTOR	1					
4	90282–03001	CHAVETA, RECTA	1					
5	90201–10039	ARANDELA PLANA	1					
6	90105–10290	TORNILLO	1					
7	2D1–85820–00	UNIDADDELSERVOMOTOR	1					
8	5VY–85829–00	CUBIERTA	1					
9	97702–50514	TORNILLO ROSCA HEMBRA	2					
10	2D1–82309–00	CABLE SUBCONDUCTOR	1					
11	5VY–82310–00	BOBINA DE ENCENDIDO COMPLETA	4					
12	3GB–82540–01	INTERRUPTOR NEUTRAL COMPL	1					
13	90430–10148	JUNTA	1					
14	5VY–85720–00	MEDIDOR DE NIVEL DE ACEITE	1					
15	5VY–8A8E0–00	.ANILLO O	1					
16	95022–06016	PERNO, DE BRIDA	2					
17	90465–08053	BRIDA	1					
18	4XV–83755–03	SENSOR DE VELOCIDAD	1					
19	4D9–81168–00	.ANILLO O	1					
20	90464–51001	BRIDA	1					
21	90110–06161	TORNILLO ALLEN	1					
22	90462–08057	BRIDA	1					
23	23P–81670–00	RECOGEDOR COMPL.	1					
24	5VY–8A8E1–00	.ANILLO-O	2					
25	5VY–15589–02	PLACA	1					
26	90110–06161	TORNILLO ALLEN	1					
27	90465–08054	BRIDA	1					

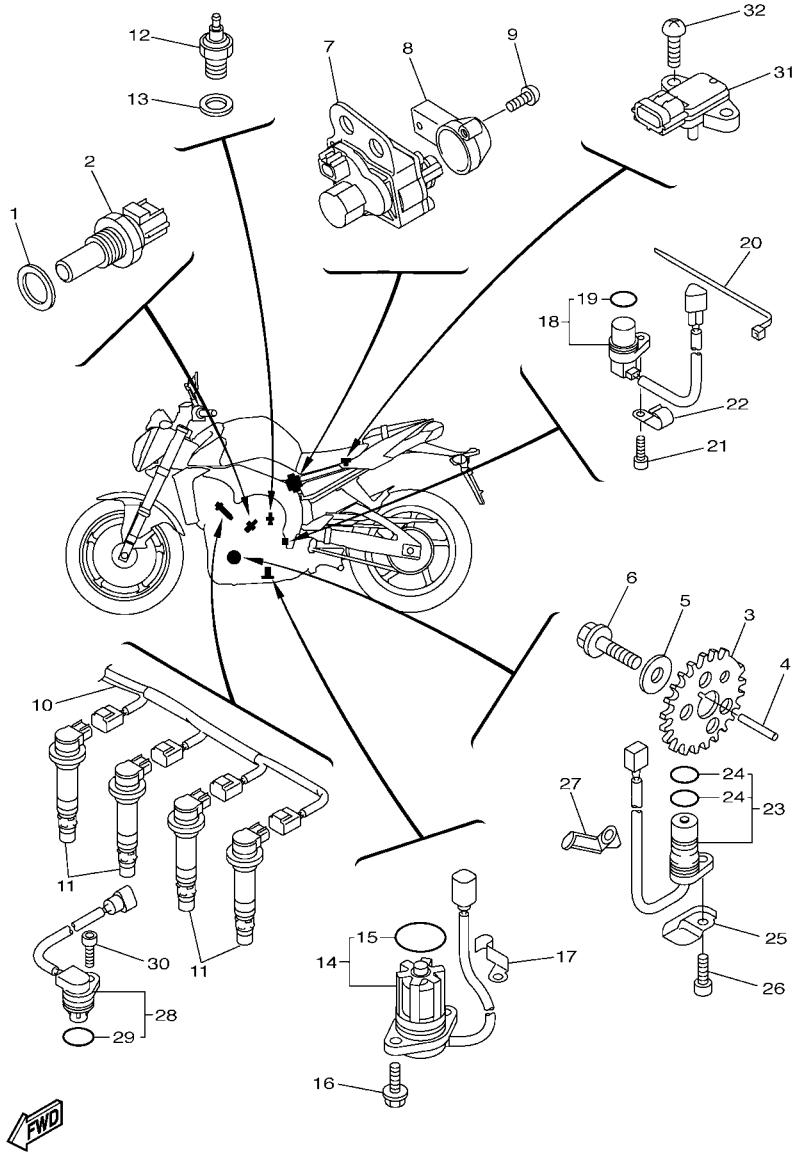

FIG. 45 EQUIPO ELECTRICO 1

REF. Nº	CODIGO Nº	DESCRIPCION	22CF					OBSERVACIONES
28	5VY–85896–00	SENSOR DE LEVA	1					
29	4D9–81168–00	.ANILLO O	1					
30	90110–06175	TORNILLO ALLEN	1					
31	2C0–82380–00	SENSOR DE PRESION	1					
32	97702–60520	TORNILLO ROSCA HEMBRA	1					

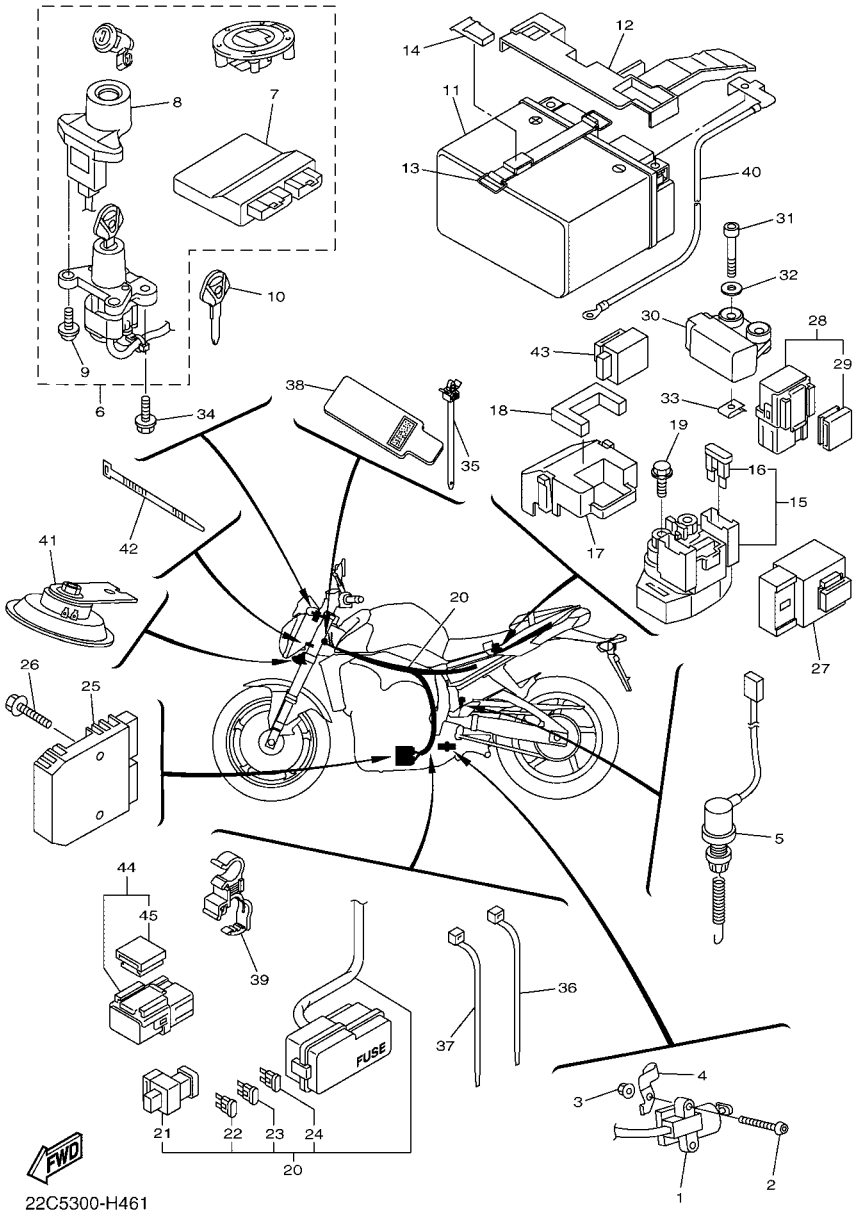

FIG. 46 EQUIPO ELECTRICO 2

REF. Nº	CODIGO Nº	DESCRIPCION	22CF					OBSERVACIONES
1	5VS–82566–61	INTERRUPTOR	1					
2	92012–05030	PERNO	2					
3	95602–05200	TUERCA DE AUTO-CIERRE	2					
4	5D0–27323–00	SOPORTE 1	1					
5	2D1–82530–00	INTERRUPTOR DE PARADA COMPLETO	1					
6	2D1–W8250–F0	JUEGO DE INMOVILIZADOR	1					
7	2D1–8591A–C0	.UNIDAD CONTROL	1					
8	2D1–8255P–00	.UNIDAD INMOVILIZADORA	1					
9	5SL–82113–01	.TORNILLO	2					
10	5SL–82511–08	BLANK KEY	1					AP
11	2D1–82100–00	BATERIA (GS YUASA YTZ14S)	1					
12	2D1–82129–00	CUBIERTA DE BATERIA	1					
13	2D1–82131–00	TIRANTE DE BATERIA	1					
14	5YU–2162A–00	GANCHO	1					
15	2C0–81940–00	CONJUNTO ARRANCADOR RELEVO	1					
16	36Y–82151–00	.FUSIBLE (15A-BL)	2					
17	5SL–82119–10	CUBIERTA DE CABLE CONDUCTOR	1					
18	2D1–82176–00	AMORTIGUADOR	1					
19	95022–06008	PERNO, DE BRIDA	2					
20	22C–82590–10	CONJUNTO DE CABLES	1					
21	5JW–82151–10	.FUSIBLE (50A)	1					
22	5JJ–82151–10	.FUSIBLE (15A-BL)	3					
23	5JJ–82151–30	.FUSIBLE (10A-BL)	7					
24	5JJ–82151–60	.FUSIBLE (30A-BL)	2					
25	1D7–81960–00	RECTIFICADOR Y REGULADOR	1					
26	95822–06025	TORNILLO DE REBORDE	2					
27	5VK–81950–40	RELE COMPLETO	1					

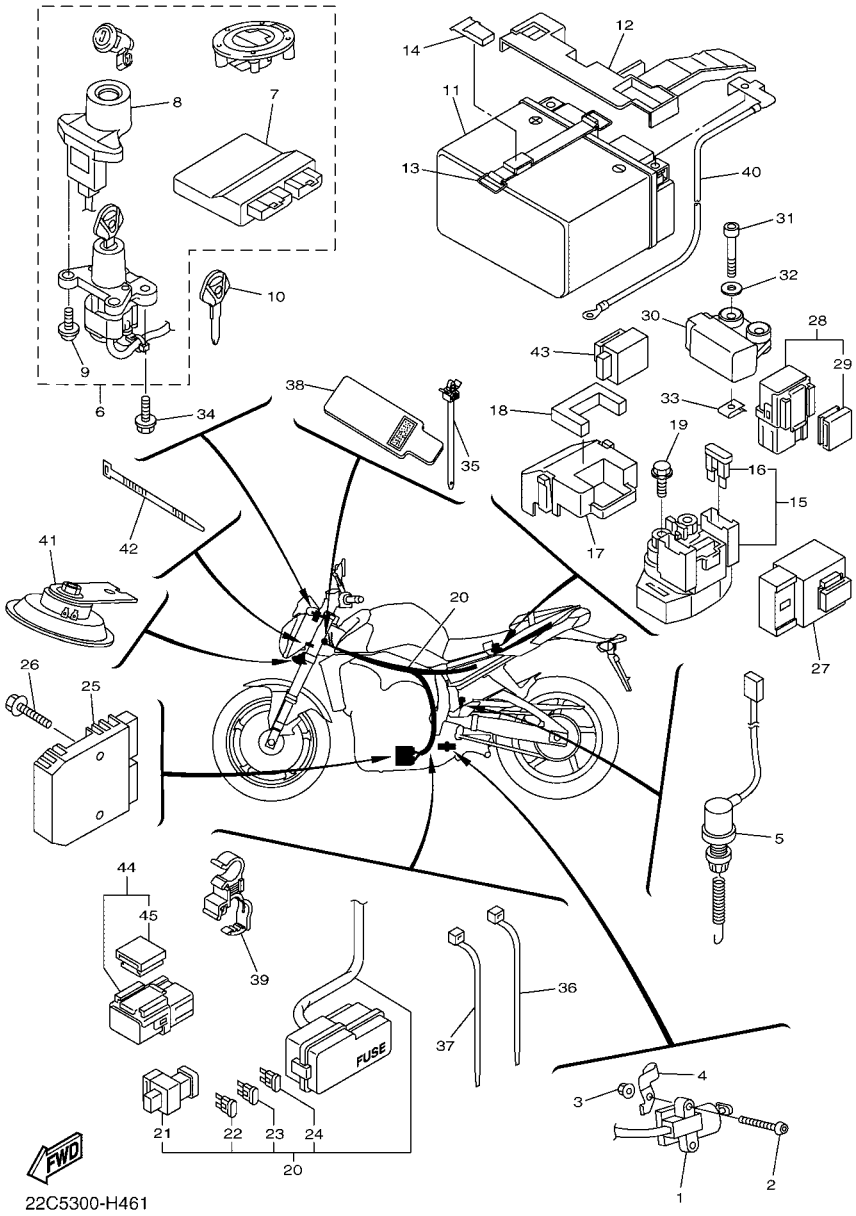

FIG. 46 EQUIPO ELECTRICO 2

REF. Nº	CODIGO Nº	DESCRIPCION	22CF					OBSERVACIONES
28	5JJ–81950–20	RELE COMPLETO	1					
29	5JJ–81952–00	.SOSTEN DE RELE	1					
30	5PS–82576–01	SENSOR ANGULO DE INCLINATION	1					
31	91312–04025	TORNILLO	2					
32	90201–04030	ARANDELA PLANA	2					
33	90183–04039	TUERCA DE RESORTE	2					
34	90109–08195	PERNO	2					
35	90464–12036	BRIDA	2					
36	1UA–82591–00	BANDA	3					
37	90464–13073	BRIDA	3					
38	2D1–82589–00	PROTECTOR DE ARNES DE CABLE	1					
39	90464–12012	BRIDA	1					
40	5D0–82116–00	CABLE CONDUCTOR NEGATIVO	1					
41	2D1–83371–00	BOCINA	1					
42	90465–10098	BRIDA	1					
43	4GY–83350–00	RELE DE DESTELLADOR COMPL.	1					
44	5EA–81950–20	RELE COMPLETO	1					
45	5EA–81952–00	.SOSTEN DE RELE	1					

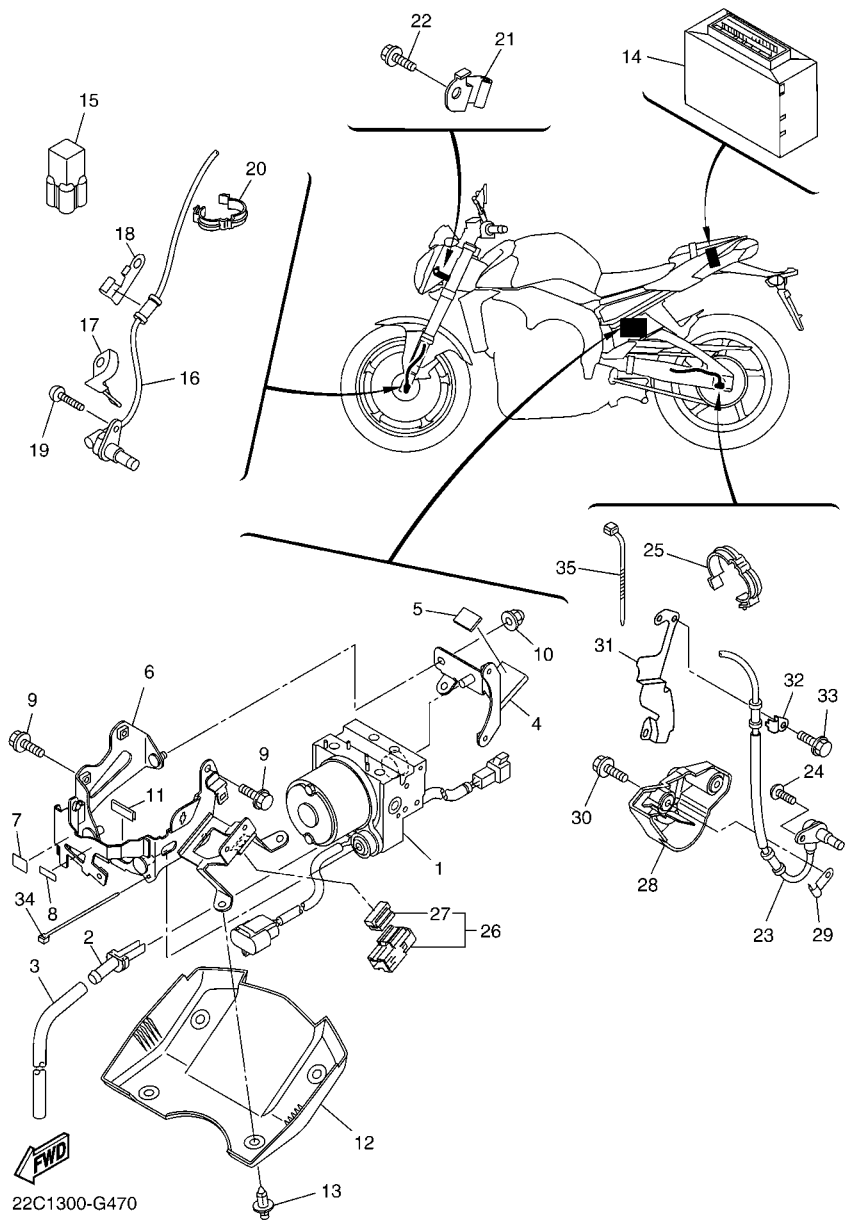

FIG. 47 EQUIPO ELECTRICO 3

REF. Nº	CODIGO Nº	DESCRIPCION	22CF					OBSERVACIONES
1	5D0–85930–00	UNIDAD DE HIDRAULICA	1					
2	5CG–24196–00	TAPON DE DRENAJE	1					
3	90445–10144	TUBO (L450)	1					
4	5D0–2175T–00	SOPORTE 1	1					
5	5YU–21639–00	AMORTIGUADOR 2	1					
6	5D0–2175U–00	SOPORTE 2	1					
7	5SL–21268–00	SELLO	1					
8	1B3–28307–10	SELLO	1					
9	95827–06012	TORNILLO	4					
10	90176–06008	TUERCA CORONA	1					
11	5YU–24188–00	MOLDURA DEPOSITO COMBUST.	1					
12	5D0–2172W–00	CUBIERTA	1					
13	90269–07077	REMACHE	4					
14	5D0–85940–00	UNIDAD DE CONTROL COMPLETA	1					
15	3YA–82378–00	CONECTOR	1					
16	22C–85970–00	CONJUNTO DE CABLES	1					
17	5D0–23874–00	SOPORTE DE CABLE	1					
18	5D0–23358–00	MANGUERA	1					
19	92014–06014	PERNO	1					
20	90464–12013	BRIDA	4					
21	22C–26393–00	SOPORTE	1					
22	95027–06010	PERNO, DE BRIDA	1					
23	5D0–85980–00	CONJUNTO DE CABLES	1					
24	92014–06014	PERNO	1					
25	90464–12013	BRIDA	3					
26	5JJ–81950–20	RELE COMPLETO	1					
27	5JJ–81952–00	.SOSTEN DE RELE	1					

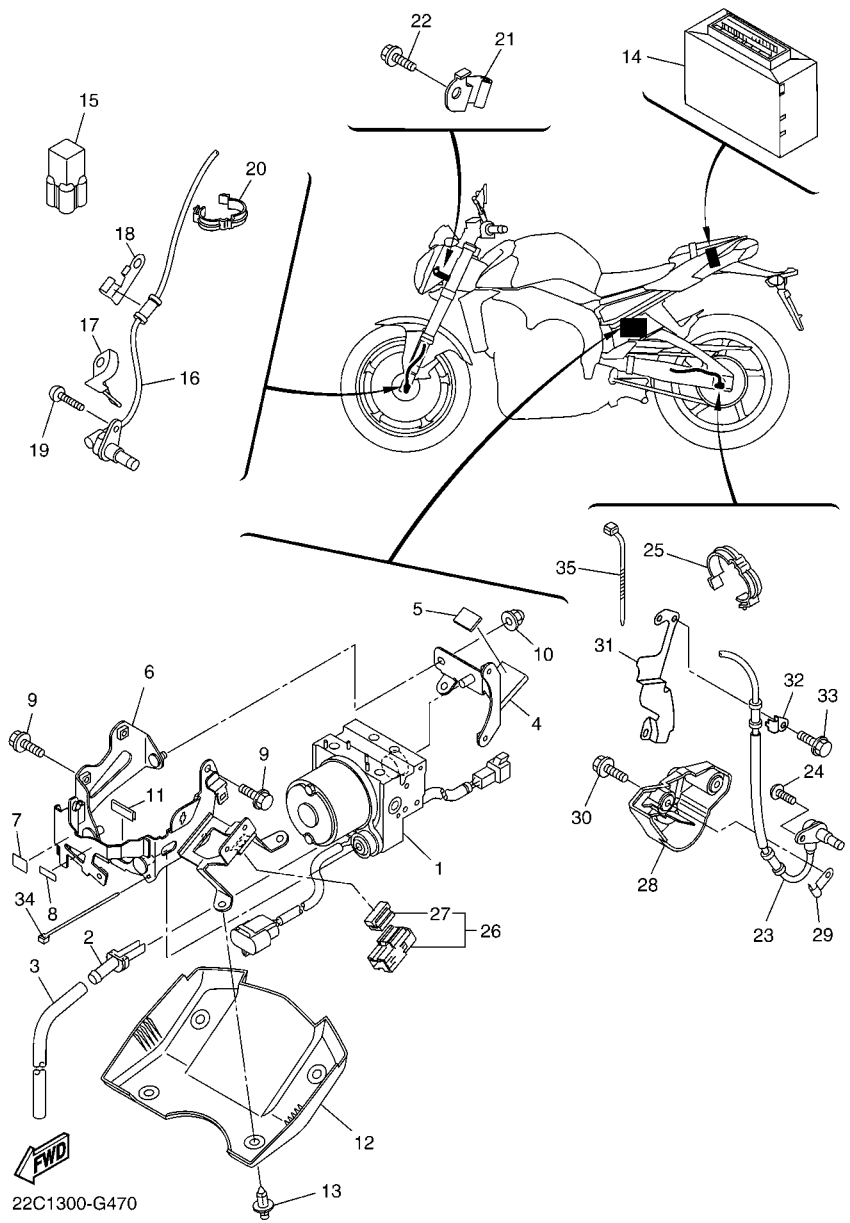

FIG. 47 EQUIPO ELECTRICO 3

REF. Nº	CODIGO Nº	DESCRIPCION	22CF					OBSERVACIONES
28	5D0–27491–00	PROTECTOR	1					
29	5D0–8357E–00	GRAMPA	1					
30	95824–06016	TORNILLO	2					
31	5D0–2216A–00	SOPORTE 4	1					
32	5D0–22465–00	SOSTEN	1					
33	95027–06010	PERNO, DE BRIDA	2					
34	90465–10098	BRIDA	1					
35	90464–13077	BRIDA	1					

CODIGO Nº	REF. Nº
2D1–11026–00	1 – 28
5VY–11101–20	1 – 1
5VY–1111G–00	1 – 26
5VY–11133–30	1 – 2
5VY–11134–10	1 – 3
5VY–11165–00	15 – 30
2D1–11181–00	1 – 17
5VY–11191–02	1 – 18
5VY–11193–10	1 – 20
214–11198–01	9 – 7
5VY–11311–10	2 – 1
2D1–1133E–01	13 – 20
2D1–1133F–11	13 – 21
5VY–11351–00	2 – 2
2D1–11411–00	3 – 1
5VY–11416–00	3 – 6
5VY–11416–10	3 – 6
5VY–11416–20	3 – 6
5VY–11416–30	3 – 6
5VY–11416–A0	3 – 6
5VY–11445–00	16 – 8
5VY–11478–00	16 – 4
2D1–11537–10	16 – 1
5VY–11549–00	3 – 5
5VY–11603–01	3 – 8
5VY–11631–10	3 – 7
5VY–11633–00	3 – 10
14B–11650–00	3 – 2
5VY–11654–01	3 – 3
2D1–11656–00	3 – 4
2D1–11656–10	3 – 4
2D1–11656–20	3 – 4
2D1–11656–30	3 – 4
2D1–12111–00	4 – 1
2D1–12112–00	4 – 2
2D1–12113–00	4 – 6
2D1–12114–00	4 – 7
5NL–12116–00	4 – 4
1HX–12117–00	4 – 8
1WG–12117–00	4 – 9
1HX–12118–00	4 – 10
1WG–12118–00	4 – 11
4SV–12119–00	4 – 13
4TV–12119–00	4 – 12
5VY–12121–00	4 – 3
3GM–12126–00	4 – 5
3FV–12153–09	4 – 16
3LN–12153–09	4 – 15
3FV–12153–20	4 – 16
3LN–12153–20	4 – 15
3FV–12153–30	4 – 16
3LN–12153–30	4 – 15
1HX–12168–00	4 – 14
1HX–12168–20	4 – 14
1HX–12168–40	4 – 14
1HX–12168–60	4 – 14
1HX–12168–80	4 – 14
1HX–12168–A0	4 – 14
1HX–12168–F0	4 – 14
1HX–12168–H1	4 – 14
1HX–12168–K1	4 – 14
1HX–12168–M1	4 – 14
1HX–12168–R1	4 – 14
1HX–12168–U1	4 – 14
1HX–12168–W1	4 – 14
1HX–12168–Y1	4 – 14
1HX–12169–11	4 – 14
1HX–12169–31	4 – 14
1HX–12169–50	4 – 14
1HX–12169–70	4 – 14
1HX–12169–90	4 – 14
1HX–12169–E0	4 – 14
1HX–12169–G0	4 – 14
1HX–12169–J0	4 – 14
1HX–12169–L0	4 – 14
1HX–12169–N0	4 – 14
1HX–12169–T0	4 – 14
2D1–12170–10	5 – 1
14B–12176–00	5 – 3
2D1–12180–20	5 – 2
5VY–12210–21	5 – 6
2D1–12213–00	5 – 7
5BE–12241–00	1 – 19
5VY–12251–00	5 – 9
5VY–12252–01	5 – 10
5VY–12277–00	27 – 12
	27 – 28
2D1–12405–01	7 – 22
2D1–12405–11	7 – 23
2D1–1240J–00–P0	7 – 45
2D1–1240K–00–P0	7 – 46
2D1–12410–00	7 – 1
5LP–12411–00	7 – 2
4C8–12420–20	6 – 7
5VY–12422–00	6 – 14
4C8–12438–00	6 – 10
4XV–12439–00	6 – 12
5VY–1243A–00	7 – 15
2D1–1243E–01	7 – 19
5VY–1243F–01	7 – 9
5VY–12443–10	15 – 47
2D1–1244G–00	7 – 16
4C8–12450–10	6 – 11
2D1–12461–00	7 – 26
22W–12462–00	7 – 27
22C–12464–00	7 – 32
2D1–12467–00	7 – 43
5VY–12469–10	6 – 1
5GV–1246A–00	7 – 12
39P–12481–00	6 – 29
2D1–12484–01	6 – 36
4XV–12485–00	6 – 27
5VY–12485–10	7 – 5
1AA–12535–00	7 – 24
2D1–12551–00	7 – 36
5VY–12576–00	6 – 2
2D1–12578–00	7 – 11
5VY–12579–00	7 – 6
5VY–12588–00	6 – 32
39P–12589–00	7 – 39
2D1–12637–00	6 – 6
2D1–12675–00	7 – 25
5EB–12822–00	9 – 14
5VY–13117–10	8 – 5
2D1–13160–00	11 – 8
5VY–13161–00	9 – 11
5VY–1316E–00	8 – 10
5VY–13310–10	6 – 17
5VY–13336–00	6 – 19
5VY–13354–00	17 – 32
5VY–13355–00	6 – 21
22C–13400–10	9 – 5
5VY–13410–00	8 – 2
4C8–13414–00	9 – 9
5VY–13416–00	8 – 7
5VY–13418–11	14 – 6
5GH–13440–20	9 – 2
5VY–13470–00	9 – 13
5JW–13473–00	9 – 16
5EB–13475–00	9 – 15
5VY–13490–00	9 – 3
5VY–13543–00	11 – 36
8FP–13556–00	11 – 32
5VY–13595–00	10 – 1
5VY–13596–00	10 – 3
5VY–13597–00	10 – 5
5VY–13598–00	10 – 7
2D1–13750–20	11 – 1
5VY–13761–00	11 – 30
5VY–13898–00	8 – 13
2D1–13907–02	28 – 13
2D1–13971–00	11 – 38
5PW–14103–00	11 – 29
5JW–14104–00	11 – 33
4KM–14137–00	11 – 9
5PS–14147–00	11 – 31
5VY–14171–00	11 – 15
5VY–14204–00	11 – 16
8CC–14216–10	11 – 28
3XV–14251–00	11 – 13
5PW–14251–00	11 – 24
5PW–14349–00	11 – 22
5SL–14349–00	11 – 27
5FL–14349–10	11 – 19
5JW–14396–00	11 – 12
2D1–14409–00	10 – 21
2D1–1440B–00	10 – 22
2D1–14411–00	10 – 9
2D1–14413–01	11 – 39
2D1–14421–00	10 – 10
2D1–14451–00	10 – 11
2D1–14452–00	10 – 12
5VY–14457–00	10 – 14
2D1–14462–00	10 – 13
2D1–14498–00	10 – 17
5JW–14589–00	11 – 26
2D1–14602–10	13 – 1
4FM–14613–00	13 – 3
2D1–14703–10	13 – 6
2D1–14718–20	13 – 9
5JW–14723–00	12 – 7
2D1–14737–00	13 – 17
5VY–14755–00	13 – 7
2D1–14799–10	13 – 10
2D1–14826–00	13 – 18
5VY–1482K–00	1 – 21
2D1–14840–00	12 – 1
5VY–14881–00	12 – 2
5VY–14882–00	12 – 3
5VY–14883–00	12 – 5
5SL–14890–10	1 – 22
5VY–14899–01	1 – 23
5VY–14905–00	11 – 34
5DM–14936–00	11 – 25
22U–14952–00	11 – 5
5PS–14987–00	11 – 23
4C8–15100–19	14 – 1
4B1–15113–00	15 – 33
4XV–15138–00	14 – 2
5EB–15155–00	14 – 3
5VY–15163–00	18 – 10
5VY–15164–00	15 – 4
36Y–15189–00	15 – 42
4H7–15189–00	15 – 44
5PX–15189–00	15 – 8
4C8–15191–00	38 – 4
5VY–15316–00	14 – 21
5PW–15361–00	14 – 20
3F9–15362–10	15 – 17
2D1–15393–00	10 – 19
5VY–15411–00	15 – 1
2D1–15413–10	15 – 36
2D1–15416–00	15 – 23
2D1–15418–00	15 – 14
2D1–15421–00	15 – 16
4C8–15431–00	15 – 39
2D1–15441–01	15 – 32
2D1–15451–10	15 – 10
4C8–15456–00	15 – 28
4C8–15461–00	15 – 19
4C8–15462–00	15 – 37
5VY–15515–00	16 – 7
5VY–15517–00	16 – 12
5VY–15521–00	16 – 13
5VY–15542–00	15 – 5
5VY–15570–00	16 – 5
5VY–15586–00	16 – 6
5VY–15589–02	45 – 25
5VY–16150–00	17 – 7
5VY–16154–00	17 – 8
5VY–16155–00	16 – 2
5VY–16164–00	17 – 30
5VY–16181–00	17 – 31
5VY–16321–00	17 – 15
5VY–16325–00	17 – 13
	17 – 16
5VY–16330–00	17 – 17
5VY–16331–00	17 – 12
5VY–16340–00	17 – 26
132–16346–00	20 – 2
5VY–16351–00	17 – 18
4XV–16356–01	17 – 25
2D1–16370–00	17 – 9
2D1–16382–00	17 – 1
5VY–16383–00	17 – 11
5VY–16384–00	17 – 10
4X7–16385–00	17 – 14
2D1–17121–10	18 – 9
2D1–17131–00	18 – 6
2D1–17151–00	18 – 3
2D1–17161–00	18 – 8
5VY–17211–00	18 – 32
2D1–17221–00	18 – 21
5VY–17231–00	18 – 29
5VY–17241–00	18 – 26
2D1–17251–01	18 – 30
2D1–17261–00	18 – 24
4C8–17402–00	18 – 17
2D1–17411–00	18 – 1
5VY–17442–00	18 – 19
5VY–17446–00	18 – 15
3CV–17460–00	18 – 35
2D1–18101–00	20 – 10
2D1–18110–00	20 – 15
2D1–18112–00	20 – 13
5EB–18113–00	20 – 16
	37 – 2
2D1–18115–00	20 – 17
5VX–18116–00	20 – 20
5VY–18127–10	20 – 5
5VY–18140–00	20 – 3
5VY–18144–00	20 – 1
5VX–18154–00	20 – 21
2D1–18511–00	19 – 4
2D1–18512–00	19 – 5
5VY–18513–01	19 – 6
5VY–18531–00	19 – 7
5VY–18535–00	19 – 8
5VY–18536–00	19 – 10
5VY–18540–00	19 – 1
136–18542–00	19 – 2
5VY–18562–00	19 – 11
2D1–21110–43–P0	21 – 1
2D1–2117E–00	22 – 31
2D1–2117G–00	21 – 19
4XV–2117K–00	29 – 22
2D1–2117N–00	21 – 14
2D1–21190–11–P0	21 – 2

CODIGO Nº	REF. Nº
2D1–21261–00	22 – 45
5SL–21268–00	47 – 7
22C–21287–00	23 – 23
22C–2129Y–00	23 – 22
2D1–21341–11	29 – 6
5D0–21345–00	21 – 23
3YX–21376–00	21 – 21
2D1–21399–00	21 – 15
2D1–2139U–00	7 – 33
5YU–2143A–00	21 – 5
2D1–2144G–00	36 – 34
4C8–21495–00	21 – 10
	21 – 13
22C–21511–01–P0	22 – 1
22C–21511–01–P2	22 – 1
22C–21523–00	22 – 3
1CA–21568–00	28 – 43
39P–21575–00	21 – 32
5VS–21578–10	22 – 12
2D1–21611–00	22 – 48
2D1–21629–00	22 – 36
5YU–2162A–00	46 – 14
2D1–21639–00	22 – 49
5YU–21639–00	47 – 5
2D1–2163A–00	22 – 27
22C–2163E–00	22 – 15
2D1–2163G–F0	22 – 52
2D1–21646–00	22 – 22
2D1–21650–00	24 – 36
2D1–21651–00–P0	22 – 24
2D1–21651–00–P7	22 – 24
14B–21668–00	24 – 40
2D1–21669–00	22 – 33
2D1–21688–02	22 – 37
2D1–216A2–00	22 – 18
2D1–216A3–00	22 – 19
2D1–21711–00	23 – 1
2D1–21719–00	23 – 5
2D1–2171A–00–P0	28 – 26
2D1–2171A–00–P5	28 – 26
5D0–21721–00	23 – 2
5D0–2172W–00	47 – 12
5PW–2174X–00	22 – 25
2D1–2174Y–00	21 – 16
5D0–2175T–00	47 – 4
5D0–2175U–00	47 – 6
26H–21828–00	23 – 8
2D1–21871–00	23 – 6

CODIGO Nº	REF. Nº
5VY–21875–00	23 – 7
2D1–2197E–00	21 – 33
5D0–22110–10	24 – 1
2D1–22117–00	24 – 20
5JJ–22128–00	24 – 5
39P–22141–00	24 – 33
2D1–22151–00	24 – 9
5D0–2216A–00	47 – 31
2D1–2217A–10	24 – 21
2D1–2217M–00	24 – 22
39P–22184–00	24 – 2
5D0–22210–00	25 – 1
5D0–22210–20	25 – 1
5SL–22311–00	24 – 13
5D0–22465–00	47 – 32
5D0–23102–12	27 – 1
5D0–23103–12	27 – 17
5D0–23110–00	27 – 7
2D1–23111–00	27 – 15
	27 – 31
5VY–23118–00	27 – 13
	27 – 29
5D0–23120–00	27 – 23
2D1–23121–00–P0	42 – 10
2D1–23121–00–P4	42 – 10
4KM–23123–01	27 – 36
2D1–23131–00–P0	42 – 11
2D1–23131–00–P4	42 – 11
2D1–23136–00	27 – 2
	27 – 18
2D1–23141–00	27 – 11
	27 – 27
4PU–23144–00	27 – 6
	27 – 22
4PU–23145–01	27 – 4
	27 – 20
4V4–23146–L0	27 – 3
	27 – 19
3XJ–23147–L0	27 – 16
	27 – 32
4V4–23153–L0	27 – 5
	27 – 21
509–23158–L0	27 – 9
	27 – 25
2D1–23170–01	27 – 24
2D1–23170–11	27 – 8
278–23181–50	27 – 10
	27 – 26

CODIGO Nº	REF. Nº
2D1–23340–10	27 – 34
3LC–23357–00	27 – 14
	27 – 30
5D0–23358–00	47 – 18
2D1–23377–00	35 – 35
2D1–23405–01	26 – 10
4XV–23415–01	26 – 4
4XV–23418–00	26 – 7
4XV–2341B–00	26 – 13
4PX–23426–00	21 – 31
3VD–23434–00	26 – 12
4JH–23434–00	34 – 2
2D1–23441–00	26 – 14
2D1–23442–00	26 – 17
5YU–23445–00	26 – 21
3FV–23462–00	26 – 2
5D0–23874–00	47 – 17
2D1–24106–01	28 – 38
2D1–24108–01	28 – 39
2D1–24129–00	21 – 28
2D1–2412G–00	28 – 4
5D0–24135–00	28 – 17
2D1–24139–00	21 – 29
5SL–2413B–00	28 – 42
2D1–2414P–00	28 – 40
2D1–2414R–00	28 – 41
2D1–24181–00	28 – 31
3MA–24181–00	13 – 13
5VX–24181–00	28 – 7
5VY–24181–00	28 – 3
2D1–24185–00	21 – 22
5YU–24188–00	47 – 11
2D1–24192–00	28 – 15
5CG–24196–00	47 – 2
1EC–24240–00	28 – 2
5D0–24315–00	28 – 21
5D0–24316–00	28 – 22
5D0–24317–00	28 – 23
68V–24376–00	11 – 11
8H8–24376–00	28 – 24
19B–24486–00	28 – 19
1EC–24491–00	28 – 14
39P–24602–00	28 – 10
2D1–24665–00	29 – 24
2D1–24710–01	29 – 1
2D1–24711–00	29 – 2
4HM–24728–00	29 – 3
22W–24741–00	22 – 46

CODIGO Nº	REF. Nº
3C3–24741–00	29 – 9
2D1–24747–00	22 – 26
2D1–24750–01	29 – 16
2D1–2476U–00	29 – 7
2D1–2476V–00	29 – 8
4BP–24780–00	29 – 17
2D1–24780–02	29 – 11
2D1–24785–00	29 – 10
2D1–2478E–00	29 – 20
4BP–24792–00	29 – 12
	29 – 18
4P5–2517A–00–98	30 – 10
4XV–25181–10	30 – 9
5D0–25338–00–98	32 – 1
5LV–25364–00	32 – 8
2D1–25366–00	32 – 12
2D1–25377–00	32 – 7
4P5–2537G–00	32 – 19
2D1–25381–00	32 – 25
5VY–25388–00	32 – 23
5VY–25389–01	32 – 24
5MT–25398–00	30 – 7
	32 – 11
5MT–25398–10	30 – 7
	32 – 11
5MT–25398–20	30 – 7
	32 – 11
2D1–25445–20	32 – 15
2D1–2580T–00	31 – 3
5D0–2580U–00	31 – 13
5D0–2580W–00	33 – 3
5D0–2581J–00	37 – 28
5D0–2581T–00	31 – 1
5SL–25827–00	33 – 17
5SL–25827–10	33 – 18
5SL–25828–00	33 – 19
2D1–2582A–00	37 – 12
2D1–2582W–00	33 – 1
5SL–25838–00	33 – 7
5D0–2583H–00	37 – 27
4P5–2583V–00	37 – 10
22C–2584A–00	35 – 22
22C–2584B–00	35 – 23
5SL–25852–00	37 – 25
5VS–25852–00	35 – 3
20S–25854–00	35 – 5
5SL–25854–00	37 – 23
5SL–25855–00	37 – 24

CODIGO Nº	REF. Nº
5VS–25855–00	35 – 4
4BP–2585F–01	37 – 13
5VS–25867–00	35 – 11
22C–25872–00	35 – 16
5D0–25874–00	37 – 5
22C–25875–00	35 – 21
5D0–2587A–00	37 – 31
5D0–25886–00	37 – 8
22C–2588F–00	35 – 24
2D1–25894–00	37 – 22
5D0–25895–00	37 – 16
5VS–2589F–00	35 – 7
5VS–2589H–00	35 – 6
5SL–25914–00	33 – 9
5DH–25916–00	33 – 14
3JD–25917–00	33 – 11
5SL–25917–00	33 – 6
4SV–25919–00	31 – 9
	31 – 19
5SL–25919–00	33 – 8
5D0–25921–50	33 – 10
4SV–25924–00	31 – 10
	31 – 20
8CR–25924–00	33 – 13
3GM–25925–00	31 – 11
	31 – 21
5SL–25926–00	33 – 15
2D1–26111–11	34 – 1
22C–2612E–00	35 – 28
22C–2612K–00	35 – 32
5PS–26133–10	34 – 15
	34 – 17
4YR–26240–02	34 – 4
4YR–26241–02	34 – 3
2D1–26246–00	34 – 5
5YU–26280–30	34 – 14
3LN–26281–01	34 – 8
4BP–26282–00	34 – 9
5YU–26290–30	34 – 16
5D0–26292–00	35 – 33
2D1–26302–00	34 – 7
5VS–26332–00	35 – 10
2D1–26335–00	34 – 12
22C–26393–00	47 – 21
278–27114–00	29 – 5
5VX–27114–00	36 – 17
	36 – 31
3C3–27151–01	21 – 39

CODIGO Nº	REF. Nº
2D1–27211–00	37 – 1
4BP–27222–02	37 – 14
22C–27267–00	21 – 36
39P–27311–00	36 – 1
2D1–27321–00	36 – 2
5D0–27323–00	46 – 4
2D1–27410–00	36 – 11
4BP–27413–00	36 – 12
	36 – 26
1HX–27415–00	36 – 19
	36 – 37
2D1–2741L–10	36 – 42
2D1–27420–00	36 – 25
1NL–27424–00	36 – 16
	36 – 30
36Y–27424–01	36 – 55
2D1–27425–02	21 – 34
2D1–2742L–10	36 – 49
3VR–27431–01	36 – 41
5VX–27437–00	36 – 45
	36 – 52
3VR–27441–01	36 – 48
2D1–27442–11	36 – 15
2D1–27443–11	36 – 29
2D1–27486–00	36 – 18
2D1–27487–00	36 – 36
5D0–27491–00	47 – 28
39P–28100–01	22 – 53
1EC–28199–S1	22 – 54
1B3–28307–10	47 – 8
2D1–28345–01	28 – 27
4XV–2834E–00	28 – 28
4KN–2836B–10	22 – 51
22C–28385–00–P3	23 – 17
22C–283E0–00	42 – 13
22C–28415–00	23 – 18
4D9–81168–00	45 – 19
	45 – 29
22C–81410–10	38 – 2
5VY–81450–00	38 – 1
23P–81670–00	45 – 23
2D1–81673–00	45 – 3
3AJ–81801–00	39 – 2
2D1–81815–00	39 – 7
2D1–81826–00	39 – 4
4XV–8182A–00	39 – 3
	39 – 8
11H–81844–00	39 – 5

CODIGO Nº	REF. Nº
1FK–81847–00	39 – 6
2D1–81890–00	39 – 1
2C0–81940–00	46 – 15
5EA–81950–20	46 – 44
5JJ–81950–20	46 – 28
	47 – 26
5VK–81950–40	46 – 27
5EA–81952–00	46 – 45
5JJ–81952–00	46 – 29
	47 – 27
1D7–81960–00	46 – 25
2D1–82100–00	46 – 11
5SL–82113–01	46 – 9
5D0–82116–00	46 – 40
5SL–82119–10	46 – 17
2D1–82122–10	22 – 23
2D1–82129–00	46 – 12
2D1–8212B–02	22 – 13
18G–82131–00	29 – 15
2D1–82131–00	46 – 13
36Y–82151–00	46 – 16
5JJ–82151–10	46 – 22
5JW–82151–10	46 – 21
5JJ–82151–30	46 – 23
5JJ–82151–60	46 – 24
2D1–82176–00	46 – 18
2D1–82309–00	45 – 10
5VY–82310–00	45 – 11
3YA–82378–00	47 – 15
1C7–82380–00	11 – 17
2C0–82380–00	45 – 31
2D1–82386–00	11 – 10
5SL–82511–08	46 – 10
2D1–82530–00	46 – 5
3GB–82540–01	45 – 12
2D1–8255P–00	46 – 8
5VS–82566–61	46 – 1
5PS–82576–01	46 – 30
2D1–82589–00	46 – 38
22C–82590–10	46 – 20
1UA–82591–00	21 – 20
	46 – 36
1B3–82911–00	44 – 1
3YX–82917–01	44 – 8
5PW–83310–01	40 – 1
1KH–83311–00	40 – 2
	40 – 6
	40 – 11

CODIGO Nº	REF. Nº
1KH–83311–00	40 – 16
2D1–83318–00	40 – 9
	40 – 14
5PW–83320–01	40 – 5
2D1–83330–20	40 – 10
5PW–8333A–00	40 – 3
	40 – 17
2D1–83340–20	40 – 15
5PW–8334A–00	40 – 7
	40 – 12
4GY–83350–00	46 – 43
2D1–83371–00	46 – 41
22C–83500–00	41 – 1
4XV–83513–00	41 – 4
	42 – 7
2D1–83559–00	41 – 2
5D0–8357E–00	47 – 29
4XV–83755–03	45 – 18
4XV–83912–11	44 – 2
5JJ–83913–00	44 – 11
5VS–83922–00	35 – 9
4XV–83929–00	44 – 7
4XV–83945–00	44 – 3
5LV–83951–00	44 – 6
2D1–83969–00	44 – 12
2D1–83975–00	44 – 15
4HM–83980–00	35 – 12
2D1–84300–00	42 – 1
4K0–84314–G0	42 – 2
5DM–84347–00	42 – 4
2D1–84359–00	42 – 5
5JW–84397–00	42 – 3
2D1–84710–00	43 – 1
1A2–84714–41	43 – 3
2D1–84735–00	43 – 2
2D1–84736–00	43 – 4
2D1–84737–00	43 – 5
4HC–84744–00	43 – 9
2D1–84745–00	43 – 8
3Y6–85130–02	22 – 41
5VY–85720–00	45 – 14
8CC–85790–01	45 – 2
2D1–85820–00	45 – 7
5VY–85829–00	45 – 8
2D1–85870–00	11 – 4
2D1–85885–00	11 – 2
5FL–85885–10	11 – 3
8FP–85886–00	10 – 15

CODIGO Nº	REF. Nº
5VY–85896–00	45 – 28
2D1–8591A–C0	46 – 7
2D1–8592A–00	13 – 2
5D0–85930–00	47 – 1
5D0–85940–00	47 – 14
22C–85970–00	47 – 16
5D0–85980–00	47 – 23
22C–87208–00	23 – 27
5VY–8A8E0–00	45 – 15
5VY–8A8E1–00	45 – 24
2D1–W0041–00	35 – 2
5VX–W0042–51	37 – 11
5SL–W0045–00	31 – 8
	31 – 18
5VX–W0046–00	33 – 12
5SL–W0047–00	33 – 5
3GM–W0047–10	31 – 7
	31 – 17
3MA–W0047–10	31 – 5
	31 – 15
1J3–W0048–00	31 – 12
5VS–W0048–00	31 – 22
8CR–W0048–00	33 – 16
4SV–W0057–00	31 – 4
	31 – 14
5SL–W0057–00	33 – 4
4SV–W0057–10	31 – 6
	31 – 16
2TV–W2470–00	29 – 21
5D0–W2516–00–98	30 – 1
22C–W2587–00	35 – 1
2D1–W8250–F0	46 – 6
2D1–Y2410–00–W3	28 – 1
2D1–YK241–00–P0	28 – 1
90101–08013	32 – 28
90101–10025	36 – 3
90101–10033	21 – 40
90105–05015	32 – 20
90105–06026	1 – 6
90105–06065	6 – 15
90105–06066	6 – 22
90105–06078	38 – 5
90105–06085	42 – 14
90105–06174	42 – 15
90105–06400	35 – 25
90105–07006	5 – 4
90105–08101	14 – 14
90105–10211	24 – 31

CODIGO Nº	REF. Nº
90105–10211	25 – 4
90105–10283	24 – 25
	24 – 28
90105–10290	45 – 6
90105–10638	31 – 23
90109–05005	10 – 23
90109–06015	7 – 30
90109–06031	22 – 9
90109–06078	42 – 12
90109–06100	14 – 15
90109–06253	22 – 14
90109–066F0	1 – 25
90109–08170	13 – 5
90109–08174	36 – 14
	36 – 28
90109–08195	46 – 34
90109–085G6	36 – 57
90109–103A9	36 – 32
90110–05028	28 – 20
90110–05112	28 – 11
90110–06102	24 – 16
90110–06110	13 – 19
90110–06161	6 – 35
	6 – 42
	7 – 13
	8 – 9
	9 – 12
	14 – 8
	45 – 21
	45 – 26
90110–06164	18 – 16
90110–06167	6 – 25
90110–06173	8 – 6
90110–06175	45 – 30
90110–06176	16 – 15
90110–06178	1 – 24
90110–06182	8 – 14
	15 – 31
	19 – 12
90110–06232	7 – 31
90110–06233	28 – 34
90110–06255	15 – 15
90110–06276	15 – 35
90110–06277	15 – 34
90110–06320	15 – 22
90110–06321	15 – 21
90110–06323	15 – 12
90110–06331	15 – 29

CODIGO Nº	REF. Nº
90110–06331	15 – 41
90110–06349	15 – 38
90110–08071	36 – 23
	36 – 39
90110–08099	15 – 13
90110–10024	21 – 8
	21 – 11
90110–10028	36 – 10
90111–05015	36 – 20
	36 – 38
90111–05019	28 – 32
90111–05024	28 – 35
90111–06031	7 – 44
90111–06060	13 – 11
90111–06078	7 – 47
90111–06085	37 – 32
90111–06098	20 – 22
	21 – 25
90111–10039	36 – 21
90116–10023	14 – 10
90116–10032	14 – 9
90116–10048	32 – 16
90119–05021	37 – 9
90119–06230	23 – 13
90119–06257	17 – 21
90119–09012	14 – 11
90149–06022	6 – 43
90149–06043	31 – 2
90149–06064	15 – 6
90149–06067	38 – 3
90149–06134	29 – 23
90149–06162	21 – 24
90149–06165	23 – 3
90149–06302	22 – 8
	23 – 21
	24 – 39
90149–08009	33 – 2
90153–06002	6 – 38
90154–05035	28 – 18
90157–05025	36 – 13
	36 – 27
90157–10001	21 – 3
90159–05035	43 – 11
90159–05056	22 – 28
90164–05001	41 – 5
	42 – 8
	43 – 7
90167–05076	41 – 3

CODIGO Nº	REF. Nº
90170–06228	20 – 18
90170–08010	37 – 15
90176–06008	47 – 10
90176–06014	7 – 4
90176–10075	1 – 13
90176–28083	26 – 9
90179–05003	28 – 36
90179–08410	13 – 4
90179–10006	1 – 11
90179–10025	21 – 9
	21 – 12
90179–20007	17 – 23
90179–22019	18 – 37
90179–30006	26 – 5
90183–04039	46 – 33
90183–051A0	22 – 29
90185–10009	32 – 17
90185–10023	36 – 4
90185–18009	24 – 34
90185–24008	32 – 26
90201–03015	22 – 5
90201–04030	46 – 32
90201–05017	13 – 12
90201–05043	22 – 42
90201–06034	1 – 14
90201–06086	28 – 6
90201–06431	15 – 7
90201–06589	16 – 14
90201–06M01	23 – 28
90201–07081	22 – 11
90201–08057	32 – 30
90201–08083	37 – 20
90201–10020	21 – 7
90201–10021	32 – 18
90201–10029	17 – 28
90201–10033	1 – 10
	1 – 12
90201–10035	36 – 9
90201–10039	45 – 5
90201–10065	26 – 20
90201–10669	36 – 58
90201–12575	20 – 9
90201–12790	45 – 1
90201–16027	36 – 5
90201–18013	24 – 35
90201–20016	16 – 3
90201–20017	16 – 9
90201–22015	18 – 36

CODIGO Nº	REF. Nº
90201–25020	32 – 27
90201–257H0	18 – 38
90201–281U8	26 – 8
90202–05088	28 – 37
90202–05224	28 – 33
90202–30235	26 – 6
90206–17084	36 – 22
	36 – 33
90208–20001	17 – 22
90209–08295	36 – 24
	36 – 40
90209–25011	18 – 4
90209–28008	18 – 22
90214–25003	18 – 13
90214–25004	18 – 12
90214–28002	18 – 28
90214–29002	18 – 27
90240–08124	37 – 19
90267–32103	22 – 4
90269–06001	21 – 18
90269–06003	21 – 30
90269–07007	22 – 16
	24 – 12
90269–07008	24 – 19
90269–07076	22 – 34
90269–07077	22 – 17
	22 – 50
	47 – 13
90282–03001	45 – 4
90338–08163	26 – 16
90340–12003	15 – 46
90340–14132	9 – 6
90340–18002	1 – 4
90340–32004	15 – 24
90387–05042	43 – 12
90387–06009	24 – 17
90387–06026	21 – 27
90387–06112	6 – 41
90387–06130	24 – 11
	24 – 15
90387–061W6	28 – 8
90387–06219	24 – 38
90387–06222	28 – 29
90387–062M9	23 – 12
90387–065J6	22 – 6
	23 – 20
90387–06M60	13 – 23
90387–07391	7 – 29

CODIGO Nº	REF. Nº
90387–0804S	20 – 4
90387–087L0	23 – 26
90387–10043	24 – 30
	25 – 3
90387–10050	36 – 8
90387–1012A	24 – 8
	24 – 27
	25 – 2
90387–10636	36 – 56
90387–1211D	20 – 12
90387–22016	30 – 8
90387–22029	30 – 2
90387–25007	18 – 7
90387–25008	18 – 31
90387–28003	18 – 2
90387–28004	18 – 25
90387–28017	32 – 22
90387–28018	32 – 6
90387–28019	32 – 21
90387–31003	18 – 20
90401–10038	35 – 19
90401–10172	35 – 18
	37 – 6
	37 – 29
90401–20008	9 – 1
90413–07023	7 – 18
90430–06014	1 – 8
	6 – 37
90430–06166	14 – 19
90430–08143	15 – 26
90430–10005	35 – 20
	37 – 7
	37 – 30
90430–10148	45 – 13
90445–08022	23 – 9
90445–087K6	23 – 11
90445–10144	47 – 3
90445–19002	36 – 7
90446–15386	37 – 4
90450–22017	7 – 40
90450–32001	7 – 38
90450–32006	6 – 34
90450–35001	7 – 7
	7 – 35
	7 – 37
90450–38040	6 – 3
	7 – 8
90450–62002	10 – 2

CODIGO Nº	REF. Nº
90450–62002	10 – 4
	10 – 6
	10 – 8
90462–08057	45 – 22
90464–04001	13 – 25
90464–07013	35 – 30
90464–07259	22 – 20
90464–07M40	23 – 16
90464–10008	34 – 13
90464–12012	46 – 39
90464–12013	47 – 20
	47 – 25
90464–12036	46 – 35
90464–13073	7 – 21
	46 – 37
90464–13077	47 – 35
90464–14008	22 – 2
90464–15192	42 – 16
90464–16006	21 – 38
90464–16012	22 – 21
90464–16021	22 – 32
	22 – 39
90464–17003	24 – 18
90464–20011	7 – 41
90464–20191	34 – 18
90464–28003	12 – 10
90464–30040	11 – 37
90464–51001	45 – 20
90465–08053	45 – 17
90465–08054	45 – 27
90465–10098	35 – 27
	42 – 6
	46 – 42
	47 – 34
90467–08075	23 – 10
	23 – 15
90467–09006	28 – 25
90467–10039	7 – 20
90467–11090	7 – 10
	7 – 17
	7 – 42
90467–120A3	37 – 17
90467–12191	37 – 26
90467–14015	10 – 25
90467–14171	10 – 20
90467–17128	12 – 8
90467–180A0	12 – 9
90467–18172	12 – 4

CODIGO Nº	REF. Nº
90467–18172	12 – 6
90467–200A0	6 – 33
	6 – 44
	7 – 48
90480–01333	21 – 17
90480–01559	23 – 4
90480–08264	10 – 18
90480–11009	43 – 13
90480–12003	24 – 37
90480–12010	6 – 40
90480–12024	23 – 25
90480–12072	22 – 7
90480–12314	28 – 30
90480–12596	23 – 19
90480–13004	22 – 38
90480–13010	8 – 4
90480–13014	15 – 48
90480–14013	21 – 26
90480–14604	13 – 22
90480–15363	7 – 28
90480–18276	43 – 6
90480–20001	23 – 14
90501–064L1	19 – 9
90501–12743	36 – 43
	36 – 50
90501–230A0	17 – 20
90506–18020	36 – 6
90506–20014	37 – 3
90508–18051	17 – 27
90508–32020	20 – 11
91312–04025	46 – 31
91312–05010	28 – 12
91312–06016	28 – 5
91312–06025	9 – 10
91312–06040	6 – 20
91312–06080	39 – 9
91312–06090	28 – 9
91312–08030	26 – 11
	26 – 15
	27 – 35
91314–06020	5 – 8
91314–06105	1 – 15
91314–08040	27 – 33
91317–05020	34 – 10
91317–05025	34 – 11
91317–06050	34 – 6
91380–06014	13 – 14
	15 – 49

CODIGO Nº	REF. Nº
91401–20012	37 – 21
91401–25015	36 – 47
	36 – 54
91492–12010	11 – 6
91702–08040	36 – 46
	36 – 53
91808–16023	1 – 5
91808–30031	6 – 24
92012–05030	46 – 2
92012–06014	24 – 10
	24 – 14
92012–06016	23 – 29
92014–06014	47 – 19
	47 – 24
92014–08012	15 – 27
92014–08020	37 – 18
92502–06010	11 – 18
92902–04100	35 – 14
92902–04600	35 – 15
92902–05200	43 – 14
92902–10200	26 – 19
92907–08600	17 – 2
92990–03100	11 – 21
92990–06600	13 – 16
93102–12106	20 – 7
93102–12372	6 – 9
93102–15212	17 – 5
93102–40330	18 – 33
93106–28043	30 – 4
93106–40013	32 – 3
	32 – 14
93109–17071	24 – 7
	24 – 24
93210–04092	14 – 4
93210–06667	6 – 28
	8 – 12
93210–09165	8 – 11
93210–14003	8 – 8
	14 – 7
93210–15566	9 – 4
93210–16325	15 – 43
93210–18397	16 – 10
93210–22298	8 – 3
93210–22382	15 – 9
	15 – 45
93210–235A1	6 – 30
	6 – 39
	7 – 14

CODIGO Nº	REF. Nº
93210–27194	15 – 18
93210–27370	6 – 31
93210–32172	15 – 25
93210–357A2	6 – 26
93210–47675	6 – 4
93210–49046	7 – 3
93210–57003	15 – 40
93305–20605	18 – 18
93306–00106	6 – 8
	19 – 3
93306–00304	17 – 19
93306–00420	30 – 3
93306–20124	15 – 2
93306–20230	16 – 11
93306–20531	32 – 2
	32 – 13
93306–205A2	18 – 39
93306–20652	18 – 11
93306–27209	18 – 14
93310–232R9	17 – 24
93315–31502	17 – 6
93315–31758	24 – 23
93315–41762	24 – 6
93315–42536	24 – 4
93317–11096	17 – 4
93317–11295	20 – 6
93317–33590	32 – 4
93317–42599	24 – 3
93399–99932	26 – 3
93399–99957	26 – 1
93420–61M07	32 – 5
93440–28184	18 – 5
93440–31187	18 – 23
93440–52009	18 – 40
93440–62032	18 – 34
93450–18157	3 – 9
93501–04011	36 – 44
	36 – 51
93603–12007	6 – 13
	6 – 18
93603–17070	6 – 16
93605–10108	15 – 3
93607–44002	5 – 11
93610–20189	15 – 20
93900–00030	30 – 6
	32 – 10
94112–17094	30 – 5
94119–17062	32 – 9

CODIGO Nº	REF. Nº
94580–25078	8 – 1
94582–10122	32 – 31
94591–60122	5 – 5
94682–05031	32 – 32
94701–00318	1 – 16
95022–06008	46 – 19
95022–06016	45 – 16
95022–06020	20 – 14
95022–10016	21 – 37
95024–06012	1 – 7
95024–06025	6 – 5
95024–10040	21 – 6
95027–06010	35 – 26
	47 – 22
	47 – 33
95027–06020	35 – 34
	44 – 5
95027–06025	35 – 31
95302–08600	32 – 29
95304–06700	20 – 19
95602–05100	22 – 43
	43 – 15
95602–05200	46 – 3
95602–06200	22 – 10
	29 – 4
95602–10200	21 – 41
	24 – 26
	24 – 29
	24 – 32
	25 – 5
	26 – 18
95604–10200	21 – 4
95607–06200	44 – 4
95612–08625	1 – 9
95617–06100	35 – 8
95702–06500	13 – 15
	13 – 24
	29 – 13
	29 – 19
95707–06500	35 – 17
	35 – 36
95802–06012	7 – 34
95807–06010	35 – 29
95812–06050	14 – 18
95812–06060	14 – 16
95812–06070	14 – 17
95812–08016	21 – 35
95812–08025	22 – 44

CODIGO Nº	REF. Nº
95812–08050	14 – 12
95812–08060	14 – 13
95814–08030	13 – 8
95814–10040	36 – 59
95817–06012	35 – 37
95822–06012	23 – 24
95822–06020	22 – 47
	29 – 14
95822–06025	46 – 26
95822–08012	22 – 35
95824–06016	47 – 30
95827–06012	47 – 9
97702–50014	42 – 9
97702–50016	22 – 40
97702–50025	10 – 24
97702–50514	45 – 9
97702–50520	10 – 16
97702–60520	45 – 32
97706–04012	40 – 4
	40 – 8
	40 – 13
	40 – 18
	43 – 10
98502–04012	35 – 13
98502–05014	11 – 14
98502–06012	11 – 7
98507–03016	11 – 20
98507–04010	44 – 10
98507–05022	44 – 16
98507–05030	44 – 13
98507–05045	44 – 14
98507–06008	36 – 35
98507–06020	11 – 35
98704–03020	44 – 9
98902–05008	28 – 16
98902–06012	22 – 30
99001–07600	17 – 3
99002–10600	20 – 8
99009–10400	17 – 29
99009–12400	6 – 23
99480–10018	15 – 11
99530–08012	9 – 8
99530–10014	14 – 5
99530–10114	1 – 27
	2 – 3

CODIGO Nº	REF. Nº

CODIGO Nº	REF. Nº

CODIGO Nº	REF. Nº

CODIGO Nº	REF. Nº