YAMAHA

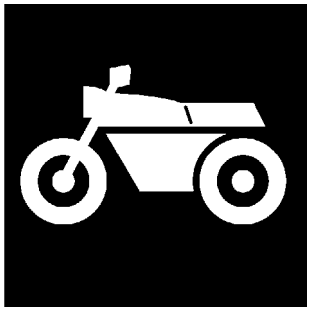

PARTS CATALOGUE

FZ6-ST (5VX8) U49
FZ6-STC (5VX9) CALIFORNIA
FZ6-ST (5VXA) CANADA

1D5VX-100E1

(2D5VX-100E1)

YAMAHA GENUINE Parts & Accessories

A2

FZ6-ST/FZ6-STC
PARTS CATALOGUE
©2004 by Yamaha Motor Co., Ltd.
1st edition, August 2004
All rights reserved.
Any reprinting or unauthorized use
without the written permission of
Yamaha Motor Co., Ltd.
is expressly prohibited.
Printed in Japan.

A3

FZ6-ST/FZ6-STC

A4

FOREWORD

This Parts Catalogue is related to the parts for the model(s) on the cover page. When you are ordering replacement parts, please refer to this Parts Catalogue and quote both part numbers and part names correctly.

1. Modifications or additions which have been made after the issue of the Parts Catalogue will be announced in the Parts News.
   It is advisable that you make the necessary corrections to the Parts Catalogue according to the Parts News.

2. Abbreviations
   The following abbreviations are used in this Parts Catalogue.

   "UR" Use specified parts number.
   "UN" Use as many as needed.
   "AP" Alternate Parts
   "LM" Locally Made (Parts need to be ordered locally)
   "F#" Frame No. (Applicable machine No.)
   "O/S" Over Size

3. The number of components for assembly
   - Parts, which are to be supplied in an assembly, are listed with a dot (.) in front of the part name as shown below.
   - The numeral appearing to the right of each component part indicates the quantity of parts for each assembly unit.

PART NO.	DESCRIPTION	Q'TY	REMARKS
2F5–83310–60	FRONT FLASHER LIGHT ASSY	2	
115–83311–60	.BULB (6V–18W)	1	

4. Applicable colours of graphics are represented in the "REMARKS" as shown below.

PART NO.	DESCRIPTION	Q'TY	REMARKS
2N4–24110–00–X5	FUEL TANK COMP.	2	MXR
3J1–24240–10	.GRAPHIC, FUEL TANK	1	FOR MXR

5. Note that the illustrations for reference in finding parts numbers are not to be used for assembling. When assembling, please use the applicable service manual.

6. The asterisk (*) before a reference number indicates modified items after the first edition.

7. Applicable Serial No.

Engine Serial No.

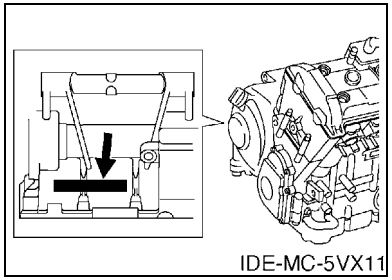

Frame Serial No.

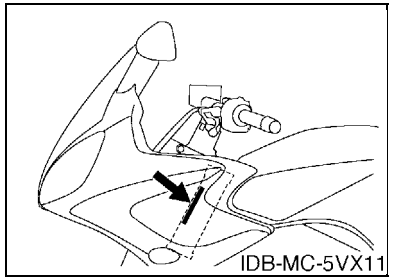

8. Applicable Colour Code (The (*) mark shows Model colour.)

Abbreviation	Colour Name	Colour Code
BS4(*)	BLUISH SILVER 4	0820
DPBML(*)	DARK PURPLISH BLUE METALLIC L	0865
LGB	LOW GLOSS BLACK	0098
SL	SILVER	0035

MODEL LABEL

(1) A label called “Model Label” is affixed in the location as indicated in (3) below. When using this parts catalogue, please be sure to cross–reference the “model code – production code No.” in the catalogue with the “model code – production code No.” indicated on the Model Label affixed onto the product concerned.

(2) “Model Label” Indication

a b ○ xxxx – xxx ● x c	a: Model Type Code b: Production Code No. c: Colouring Type

○ 4TW1–010 ● A

(3) Model Label Affixing Location

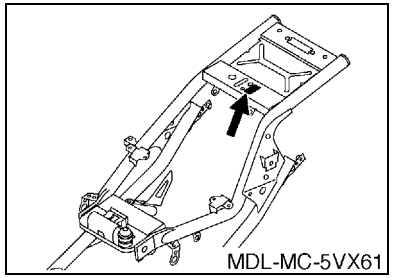

(4) Colouring Information

Model Code	Colouring Type Code	Colour Code	Colour Name	Abbreviation
5VX8	A	0865	DARK PURPLISH BLUE METALLIC L	DPBML
	B	0820	BLUISH SILVER 4	BS4
5VX9	A	0865	DARK PURPLISH BLUE METALLIC L	DPBML
	B	0820	BLUISH SILVER 4	BS4
5VXA	A	0865	DARK PURPLISH BLUE METALLIC L	DPBML
	B	0820	BLUISH SILVER 4	BS4

(5) Model Code – Production Code Number of Model Listed in This Parts Catalogue

Model Code	Production Code No.	Country (destination)
5VX8	010	U49
5VX9	010	CALIFORNIA
5VXA	010	CANADA

Model Code	Production Code No.	Country (destination)

CONTENTS

ENGINE

CYLINDER B2
CRANKSHAFT & PISTON B3
VALVE B4
CAMSHAFT & CHAIN B6
WATER PUMP B7
RADIATOR & HOSE B8
OIL PUMP B10
OIL CLEANER B11
INTAKE B12
INTAKE 2 ..... B13
AIR INDUCTION SYSTEM B15
EXHAUST C2
CRANKCASE C4
CRANKCASE COVER 1 ..... C6
STARTER C8
CLUTCH C9
TRANSMISSION C11
SHIFT CAM & FORK C13
SHIFT SHAFT C14

CHASSIS

FRAME D2
FENDER D4
SIDE COVER D7
REAR ARM D9
REAR SUSPENSION D10
STEERING D11
FRONT FORK D12
FUEL TANK D14
SEAT E2
FRONT WHEEL E3
FRONT BRAKE CALIPER E4
REAR WHEEL E5
REAR BRAKE CALIPER E7
STEERING HANDLE & CABLE E8
FRONT MASTER CYLINDER E9
STAND & FOOTREST E10
REAR MASTER CYLINDER E13
COWLING 1 ..... E14
GENERATOR F2
STARTING MOTOR F3
FLASHER LIGHT F4
METER F5
HEADLIGHT F6
TAILLIGHT F7
HANDLE SWITCH & LEVER F8
ELECTRICAL 1 ..... F9
ELECTRICAL 2 ..... F11

INDEX

NUMERICAL INDEX M1

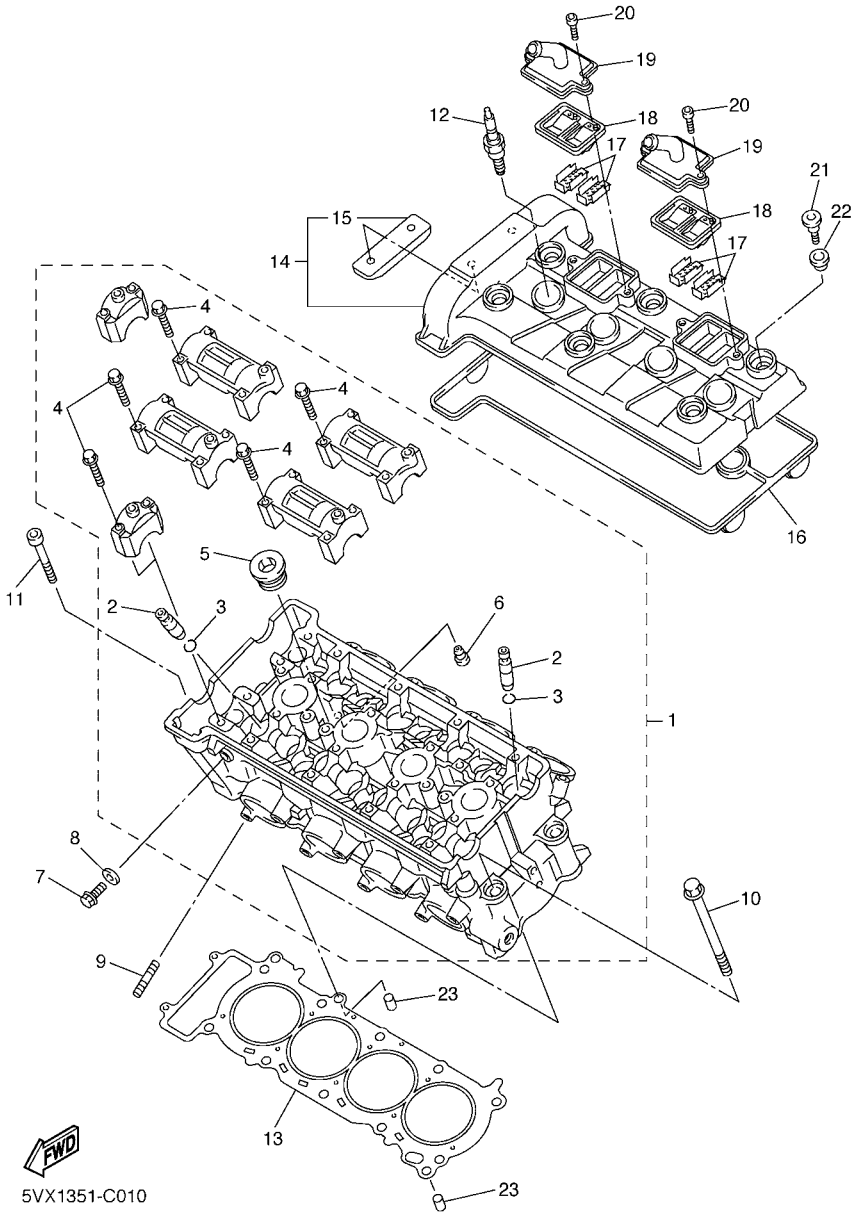

FIG. 1 CYLINDER

REF. NO.	PART NO.	DESCRIPTION	5VX8	5VX9	5VXA			REMARKS
1	5VX–11101–01	CYLINDER HEAD ASSY	1	1	1			
2	5EB–11133–10	.GUIDE, VALVE 1	16	16	16			
3	93440–10153	.CIRCLIP	16	16	16			
4	90105–06027	.BOLT, FLANGE	20	20	20			
5	90340–20090	.PLUG, STRAIGHT SCREW	3	3	3			
6	11H–15138–00	.NOZZLE 1	1	1	1			
7	95027–08012	BOLT, FLANGE	1	1	1			
8	90430–08119	GASKET	1	1	1			
9	95617–08625	BOLT, STUD	8	8	8			
10	90119–10003	BOLT, WITH WASHER	10	10	10			
11	91314–06060	BOLT	2	2	2			
12	94701–00403	PLUG, SPARK (NGK CR9EK)	4	4	4			
13	5VX–11181–00	GASKET, CYLINDER HEAD 1	1	1	1			
14	5VX–11191–00	COVER, CYLINDER HEAD 1	1	1	1			
15	5BE–12241–00	.GUIDE, STOPPER 2	1	1	1			
16	5SL–11193–00	GASKET, HEAD COVER 1	1	1	1			
17	5SL–1482K–00	PLATE	4	4	4			
18	5SL–14890–00	REED VALVE ASSY	2	2	2			
19	5SL–14899–00	CAP, CASE	2	2	2			
20	91317–06020	BOLT	4	4	4			
21	90109–066F0	BOLT	6	6	6			
22	4KG–1111G–00	RUBBER, MOUNT 1	6	6	6			
23	99530–10114	PIN, DOWEL	2	2	2			

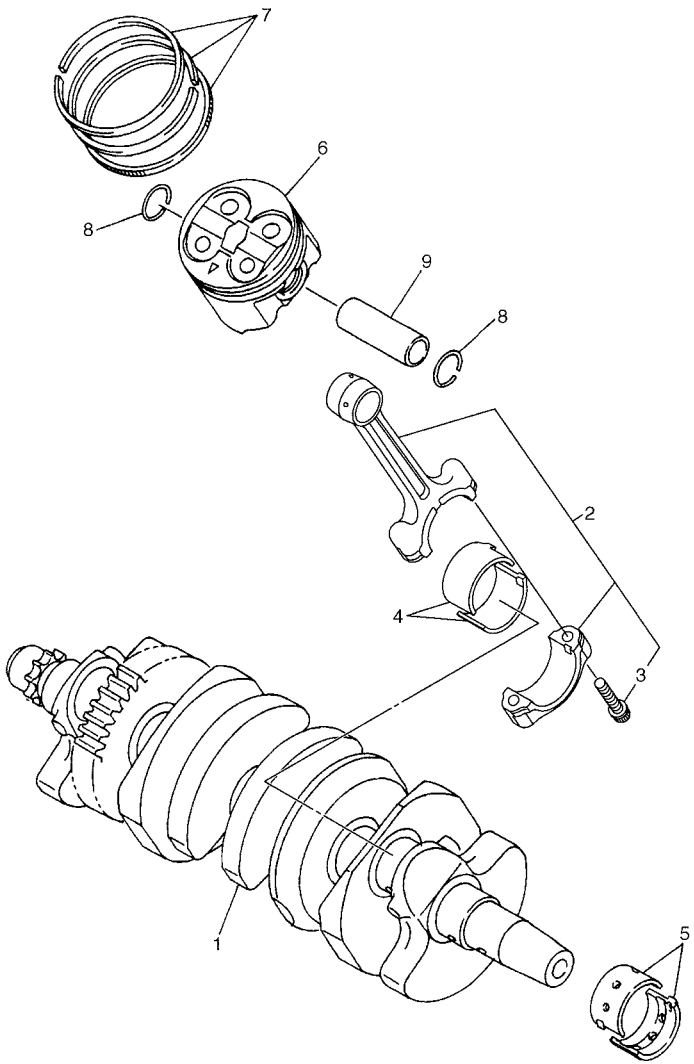

5VX6300-D020

FIG. 2 CRANKSHAFT & PISTON

REF. NO.	PART NO.	DESCRIPTION	5VX8	5VX9	5VXA			REMARKS
1	5SL–11411–00	CRANKSHAFT	1	1	1			
2	5VX–11650–00	CONNECTING ROD ASSY	4	4	4			
3	5VX–11654–00	.BOLT, CONNECTING ROD	2	2	2			
4	5VX–11656–00	PLANE BEARING, CONNECTING ROD	8	8	8			UR BLUE
	5VX–11656–10	PLANE BEARING, CONNECTING ROD	8	8	8			UR BLACK
	5VX–11656–20	PLANE BEARING, CONNECTING ROD	8	8	8			UR BROWN
	5VX–11656–30	PLANE BEARING, CONNECTING ROD	8	8	8			UR GREEN
5	5EB–11416–A0	PLANE BEARING, CRANKSHAFT 1	10	10	10			UR WHITE
	5EB–11416–00	PLANE BEARING, CRANKSHAFT 1	10	10	10			UR BLUE
	5EB–11416–10	PLANE BEARING, CRANKSHAFT 1	10	10	10			UR BLACK
	5EB–11416–20	PLANE BEARING, CRANKSHAFT 1	10	10	10			UR BROWN
	5EB–11416–30	PLANE BEARING, CRANKSHAFT 1	10	10	10			UR GREEN
6	5SL–11631–00	PISTON (STD)	4	4	4			
7	5SL–11603–00	PISTON RING SET (STD)	4	4	4			
8	93450–17129	CIRCLIP	8	8	8			
9	5EB–11633–00	PIN, PISTON	4	4	4			

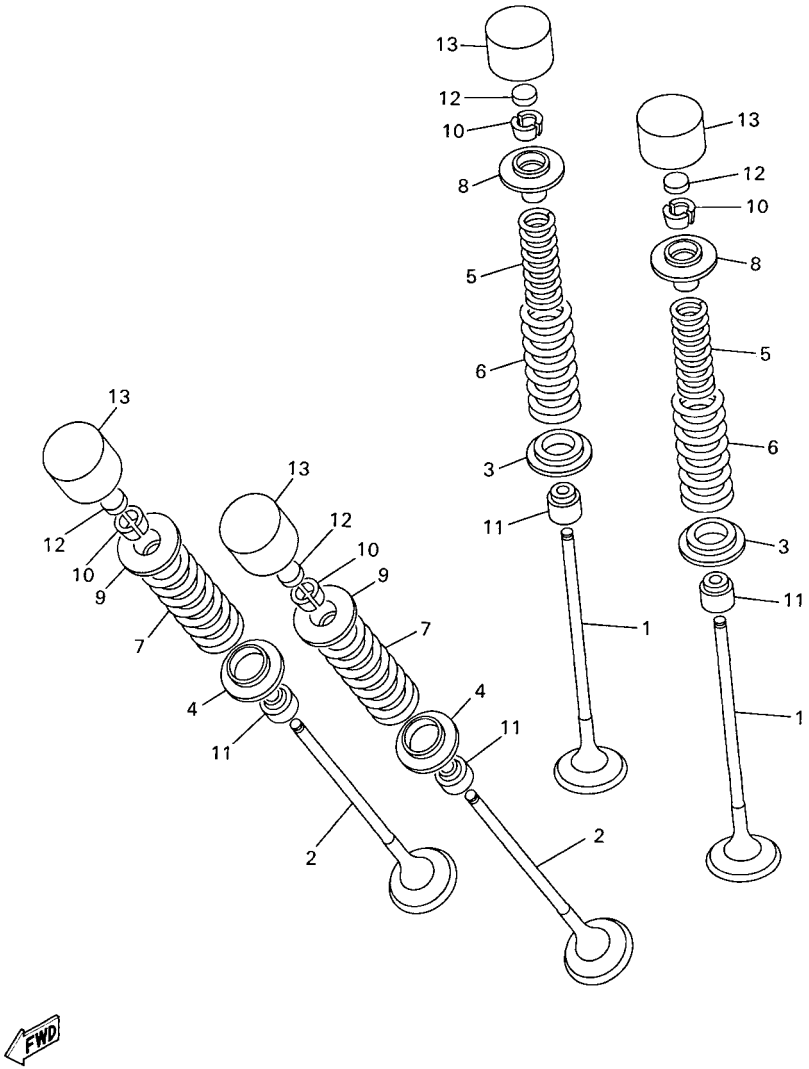

5EB3351-9030

FIG. 3 VALVE

REF. NO.	PART NO.	DESCRIPTION	5VX8	5VX9	5VXA			REMARKS
1	5SL–12111–10	VALVE, INTAKE	8	8	8			
2	5SL–12121–10	VALVE, EXHAUST	8	8	8			
3	5SL–12116–00	SEAT, VALVE SPRING	8	8	8			
4	5EB–12126–00	SEAT, VALVE SPRING 2	8	8	8			
5	5EB–12113–00	SPRING, VALVE INNER	8	8	8			
6	5EB–12114–00	SPRING, VALVE OUTER	8	8	8			
7	5EB–12124–01	SPRING, VALVE OUTER	8	8	8			
8	5EB–12117–00	RETAINER, VALVE SPRING	8	8	8			
9	5EB–12127–00	RETAINER, VALVE SPRING	8	8	8			
10	1HX–12118–00	COTTER, VALVE	32	32	32			
11	4TV–12119–00	SEAL, VALVE STEM	16	16	16			
12	1HX–12168–00	PAD, ADJUSTING 2 (1.20)	16	16	16			UR
	1HX–12168–20	PAD, ADJUSTING 2 (1.25)	16	16	16			UR
	1HX–12168–40	PAD, ADJUSTING 2 (1.30)	16	16	16			UR
	1HX–12168–60	PAD, ADJUSTING 2 (1.35)	16	16	16			UR
	1HX–12168–80	PAD, ADJUSTING 2 (1.40)	16	16	16			UR
	1HX–12168–A0	PAD, ADJUSTING 2 (1.45)	16	16	16			UR
	1HX–12168–F0	PAD, ADJUSTING 2 (1.50)	16	16	16			UR
	1HX–12168–H1	PAD, ADJUSTING 2 (1.55)	16	16	16			UR
	1HX–12168–K1	PAD, ADJUSTING 2 (1.60)	16	16	16			UR
	1HX–12168–M1	PAD, ADJUSTING 2 (1.65)	16	16	16			UR
	1HX–12168–R1	PAD, ADJUSTING 2 (1.70)	16	16	16			UR
	1HX–12168–U1	PAD, ADJUSTING 2 (1.75)	16	16	16			UR
	1HX–12168–W1	PAD, ADJUSTING 2 (1.80)	16	16	16			UR
	1HX–12168–Y1	PAD, ADJUSTING 2 (1.85)	16	16	16			UR
	1HX–12169–11	PAD, ADJUSTING 2 (1.90)	16	16	16			UR
	1HX–12169–31	PAD, ADJUSTING 2 (1.95)	16	16	16			UR

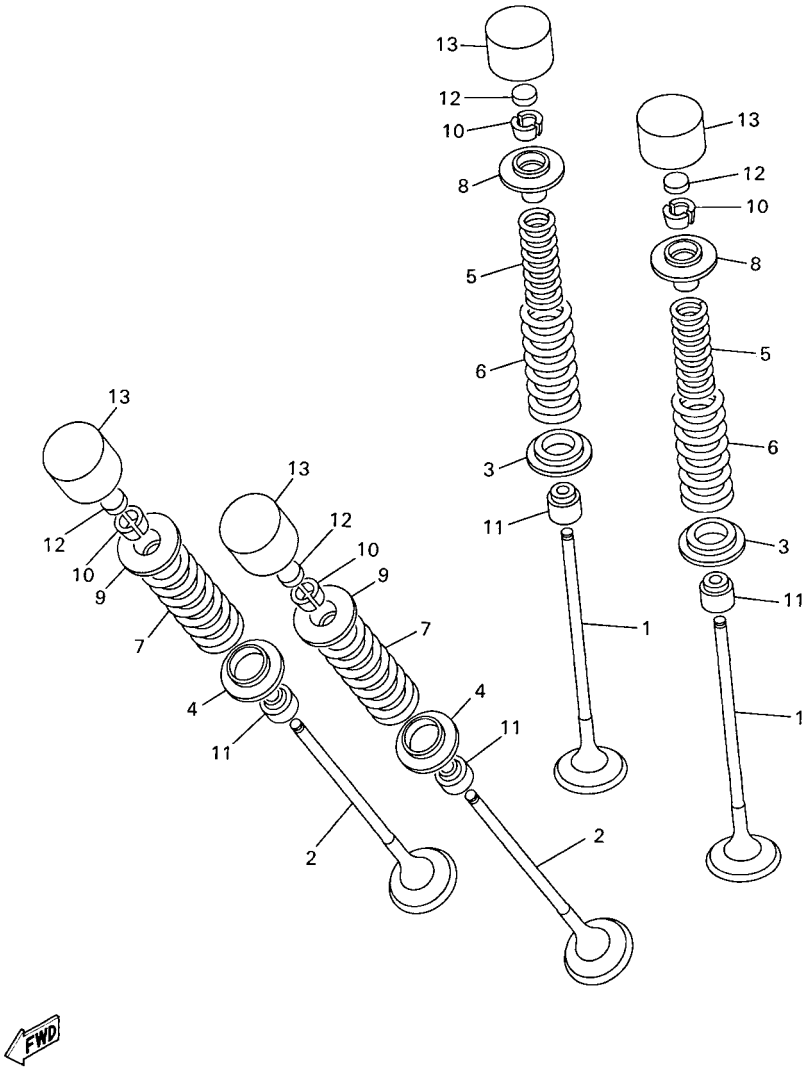

5EB3351-9030

FIG. 3 VALVE

REF. NO.	PART NO.	DESCRIPTION	5VX8	5VX9	5VXA			REMARKS
12	1HX–12169–50	PAD, ADJUSTING 2 (2.00)	16	16	16			UR
	1HX–12169–70	PAD, ADJUSTING 2 (2.05)	16	16	16			UR
	1HX–12169–90	PAD, ADJUSTING 2 (2.10)	16	16	16			UR
	1HX–12169–E0	PAD, ADJUSTING 2 (2.15)	16	16	16			UR
	1HX–12169–G0	PAD, ADJUSTING 2 (2.20)	16	16	16			UR
	1HX–12169–J0	PAD, ADJUSTING 2 (2.25)	16	16	16			UR
	1HX–12169–L0	PAD, ADJUSTING 2 (2.30)	16	16	16			UR
	1HX–12169–N0	PAD, ADJUSTING 2 (2.35)	16	16	16			UR
	1HX–12169–T0	PAD, ADJUSTING 2 (2.40)	16	16	16			UR
13	5EB–12153–20	LIFTER, VALVE	16	16	16			UR BLUE
	5EB–12153–30	LIFTER, VALVE	16	16	16			UR RED
	5EB–12153–09	LIFTER, VALVE (O/S)	16	16	16			AP GREEN

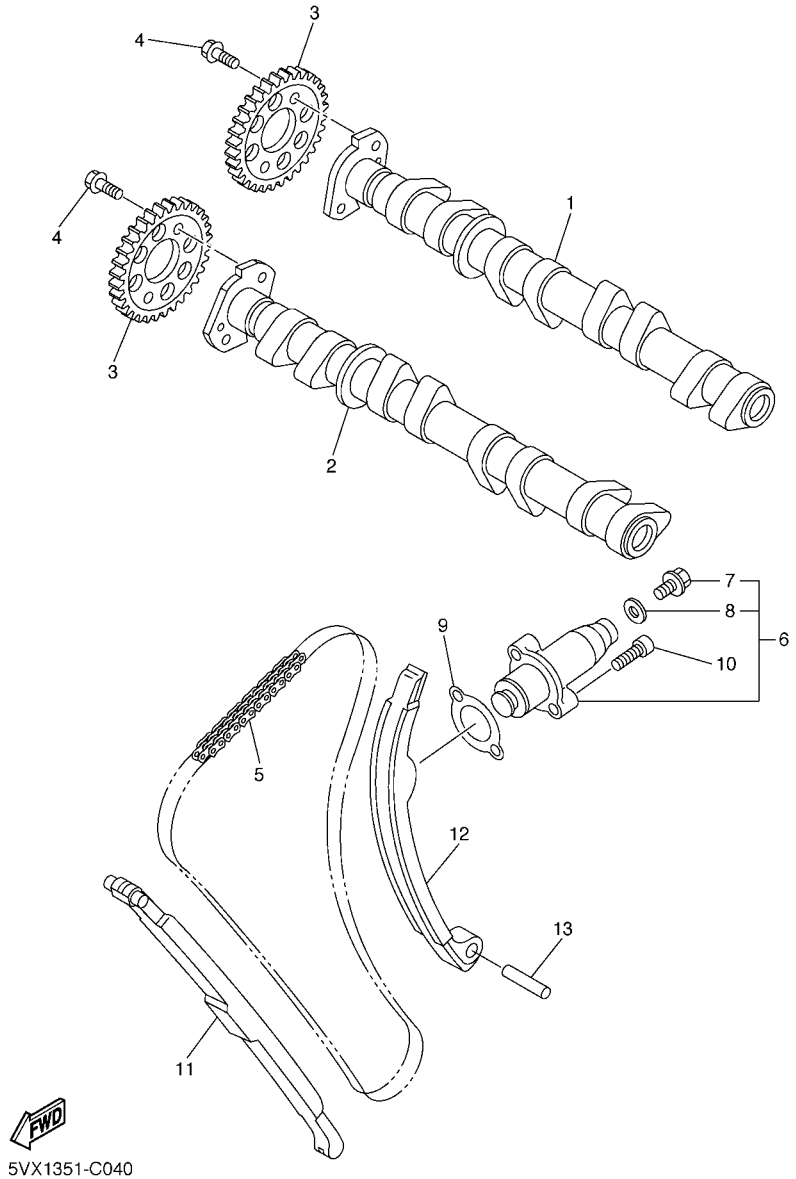

FIG. 4 CAMSHAFT & CHAIN

REF. NO.	PART NO.	DESCRIPTION	5VX8	5VX9	5VXA			REMARKS
1	5VX–12170–00	CAMSHAFT ASSY 1	1	1	1			
2	5VX–12180–00	CAMSHAFT ASSY 2	1	1	1			
3	5VX–12176–00	SPROCKET, CAM CHAIN	2	2	2			
4	90105–07004	BOLT, FLANGE	4	4	4			
5	94591–49120	CHAIN	1	1	1			
6	5SL–12210–10	TENSIONER ASSY, CAM CHAIN	1	1	1			
7	5EL–12228–00	.BOLT	1	1	1			
8	5SL–12214–00	.GASKET	1	1	1			
9	4FM–12213–00	GASKET, TENSIONER CASE	1	1	1			
10	91314–06025	BOLT	2	2	2			
11	5EB–12251–00	DAMPER, CHAIN 1	1	1	1			
12	5EB–12252–10	DAMPER, CHAIN 2	1	1	1			
13	93607–44190	PIN, DOWEL	1	1	1			

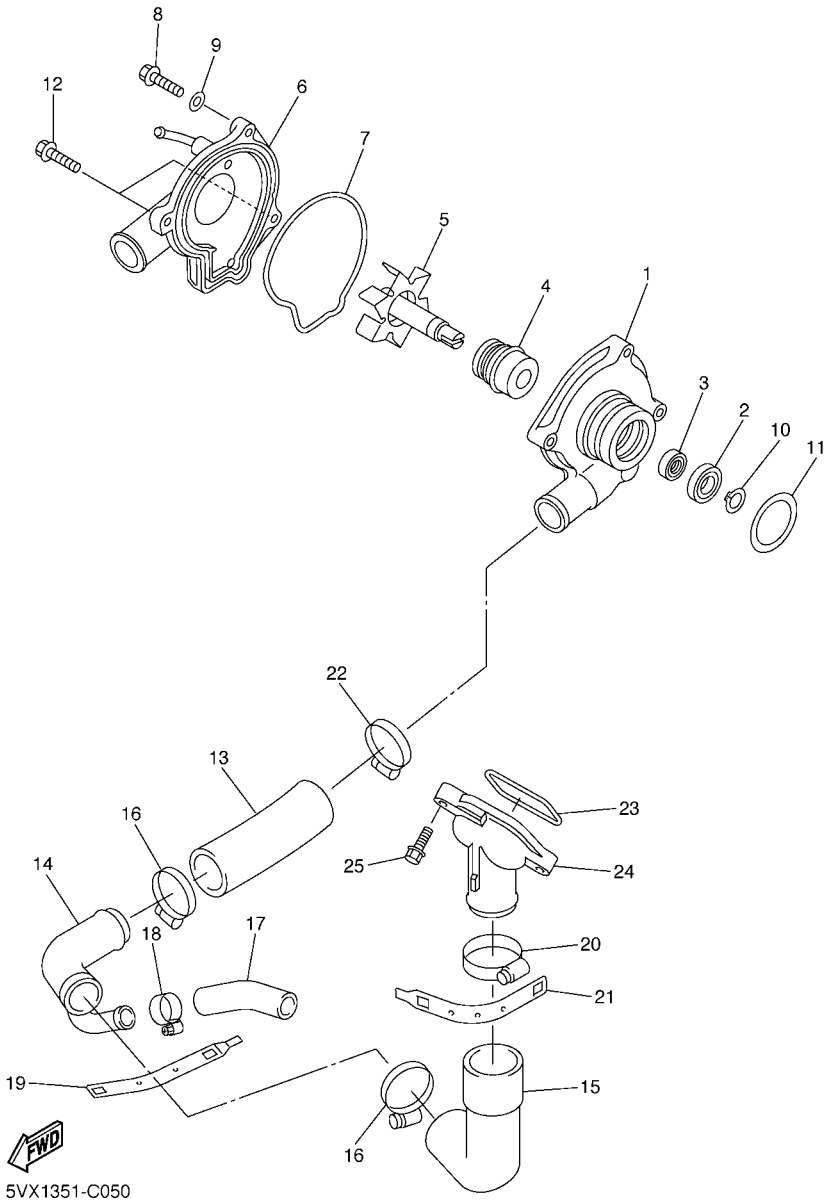

FIG. 5 WATER PUMP

REF. NO.	PART NO.	DESCRIPTION	5VX8	5VX9	5VXA			REMARKS
1	5VX–12421–00	HOUSING, WATER PUMP	1	1	1			
2	93306–00106	BEARING	1	1	1			
3	93101–12173	OIL SEAL	1	1	1			
4	11H–12438–10	SEAL, MECHANICAL	1	1	1			
5	5EB–12450–00	IMPELLER SHAFT ASSY	1	1	1			
6	5VX–12422–00	COVER, HOUSING	1	1	1			
7	5EB–12439–00	O-RING	1	1	1			
8	95024–06020	BOLT, FLANGE	2	2	2			
9	90430–06014	GASKET	1	1	1			
10	99009–12400	CIRCLIP	1	1	1			
11	93210–33133	O-RING	1	1	1			
12	90110–06086	BOLT, HEXAGON SOCKET HEAD	2	2	2			
13	4NK–12579–00	HOSE 4	1	1	1			
14	5VX–12581–00	JOINT, HOSE 1	1	1	1			
15	5EB–12577–01	HOSE 2	1	1	1			
16	90450–35001	HOSE CLAMP ASSY	2	2	2			
17	5SL–12588–01	HOSE 5	1	1	1			
18	90450–22017	HOSE CLAMP ASSY	1	1	1			
19	5GV–1246E–00	COVER 2	1	1	1			
20	90450–38040	HOSE CLAMP ASSY	1	1	1			
21	5GV–1246A–00	COVER 1	1	1	1			
22	90450–32001	HOSE CLAMP ASSY	1	1	1			
23	93210–47675	O-RING	1	1	1			
24	5EB–12469–00	JOINT 1	1	1	1			
25	90105–06053	BOLT, FLANGE	2	2	2			

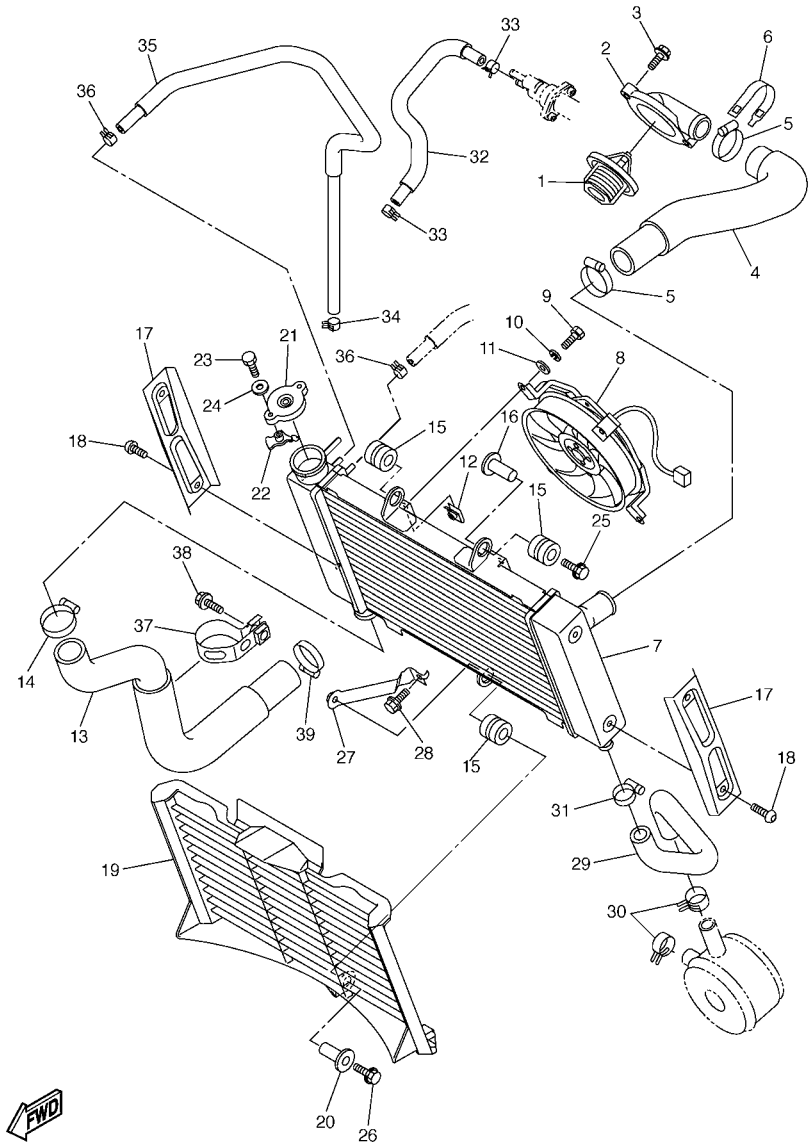

5VX1351-C060

FIG. 6 RADIATOR & HOSE

REF. NO.	PART NO.	DESCRIPTION	5VX8	5VX9	5VXA			REMARKS
1	5SL–12410–00	THERMOSTAT ASSY	1	1	1			
2	5VX–12413–00	COVER, THERMOSTAT	1	1	1			
3	90105–06557	BOLT, FLANGE	2	2	2			
4	5VX–12578–00	HOSE 3	1	1	1			
5	90450–35001	HOSE CLAMP ASSY	2	2	2			
6	5GV–1246E–00	COVER 2	1	1	1			
7	5VX–12461–00	RADIATOR ASSY	1	1	1			
8	5VX–12405–00	BLOWER ASSY	1	1	1			
9	97307–06012	BOLT	4	4	4			
10	92907–06100	WASHER, SPRING	4	4	4			
11	92907–06600	WASHER, PLATE	4	4	4			
12	1AA–12535–00	PLATE	4	4	4			
13	5VX–12579–00	HOSE 4	1	1	1			
14	90450–35001	HOSE CLAMP ASSY	1	1	1			
15	90480–15363	GROMMET	3	3	3			
16	90387–0614M	COLLAR	1	1	1			
17	5VX–1240J–00	RADIATOR COVER ASSY1	2	2	2			
18	90111–06016	BOLT	4	4	4			
19	5VX–12467–00	COVER, RADIATOR	1	1	1			
20	90387–066H4	COLLAR	1	1	1			
21	4FL–12462–00	CAP, RADIATOR	1	1	1			
22	1KT–12437–00	STOPPER	1	1	1			
23	97007–05012	BOLT	1	1	1			
24	92907–05600	WASHER, PLATE	1	1	1			
25	90119–06038	BOLT, WITH WASHER	1	1	1			
26	95824–06030	BOLT, FLANGE	1	1	1			
27	5VX–1244E–00	BRACKET 1	1	1	1			

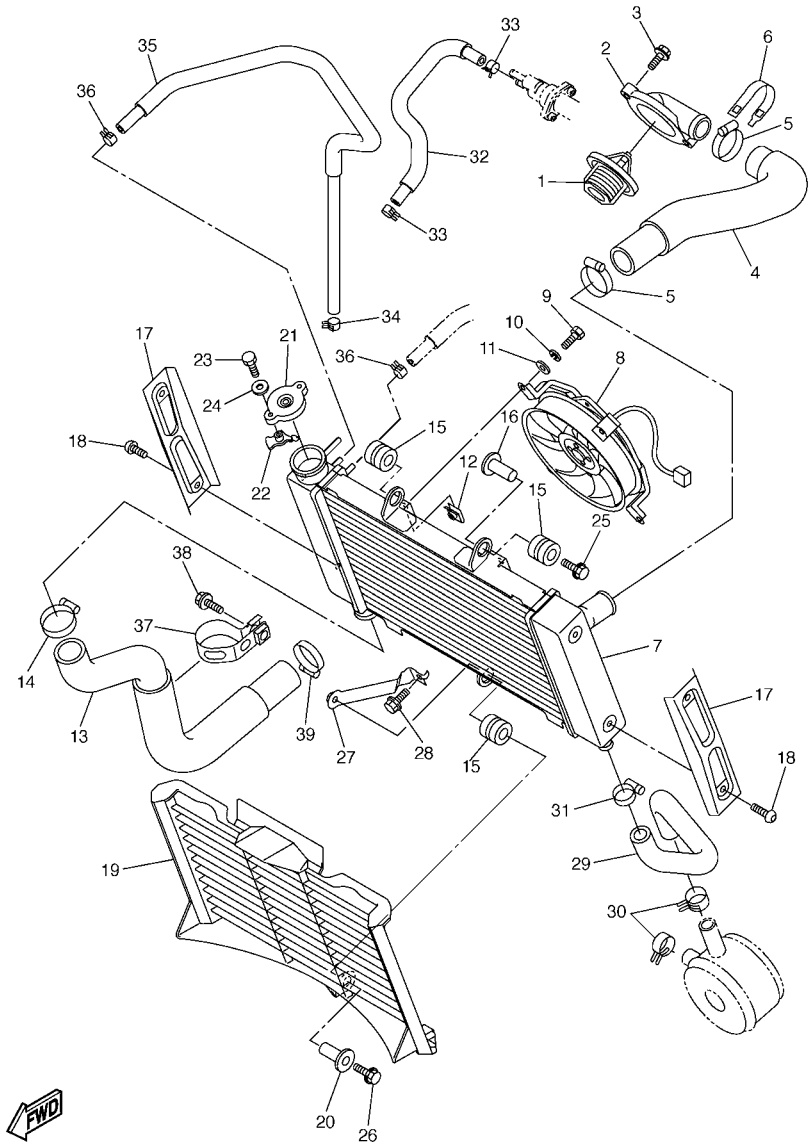

5VX1351-C060

FIG. 6 RADIATOR & HOSE

REF. NO.	PART NO.	DESCRIPTION	5VX8	5VX9	5VXA			REMARKS
28	95824–06012	BOLT, FLANGE	1	1	1			
29	5VX–12589–00	HOSE 6	1	1	1			
30	90467–200A0	CLIP	2	2	2			
31	90450–22017	HOSE CLAMP ASSY	1	1	1			
32	5VX–1243A–00	HOSE 1	1	1	1			
33	90467–11090	CLIP	2	2	2			
34	90467–11090	CLIP	1	1	1			
35	5VX–1244G–00	HOSE, 4	1	1	1			
36	90467–11090	CLIP	2	2	2			
37	5VX–12491–00	CLAMP 1	1	1	1			
38	95024–10020	BOLT, FLANGE	1	1	1			
39	90450–32001	HOSE CLAMP ASSY	1	1	1			

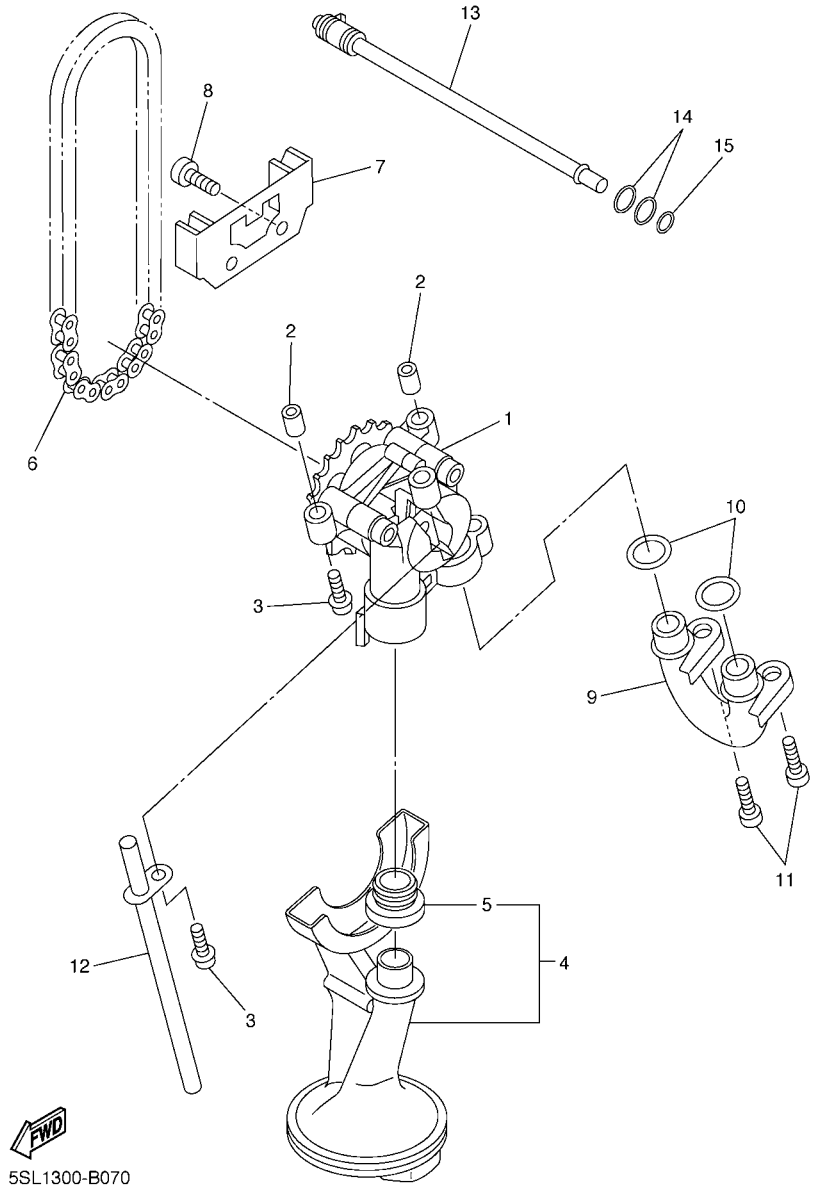

FIG. 7 OIL PUMP

REF. NO.	PART NO.	DESCRIPTION	5VX8	5VX9	5VXA			REMARKS
1	5MT–13300–00	OIL PUMP ASSY	1	1	1			
2	91808–17032	PIN, DOWEL	2	2	2			
3	90109–06031	BOLT	3	3	3			
4	5SL–13410–00	STRAINER HOUSING ASSY	1	1	1			
5	5EB–13415–00	.SEAL, OIL STRAINER	1	1	1			
6	94580–25080	CHAIN	1	1	1			
7	5EB–13898–00	HOLDER	1	1	1			
8	90110–06041	BOLT, HEXAGON SOCKET HEAD	2	2	2			
9	5JW–13416–00	PIPE, OIL 1	1	1	1			
10	93210–14003	O-RING	2	2	2			
11	90110–06041	BOLT, HEXAGON SOCKET HEAD	2	2	2			
12	5EB–13161–00	PIPE, DELIVERY 1	1	1	1			
13	5EB–1316E–00	PIPE, DELIVERY 5	1	1	1			
14	93210–09165	O-RING	2	2	2			
15	93210–06667	O-RING	1	1	1			

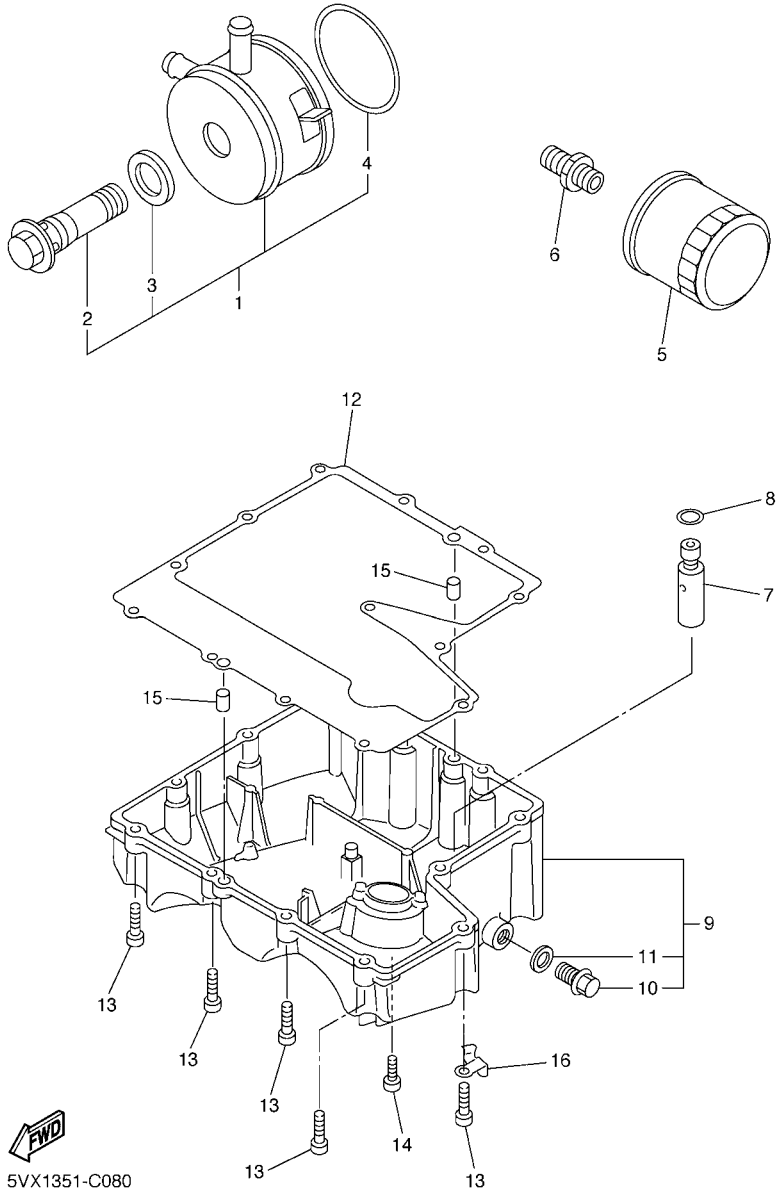

FIG. 8 OIL CLEANER

REF. NO.	PART NO.	DESCRIPTION	5VX8	5VX9	5VXA			REMARKS
1	5EB–13470–00	OIL COOLER ASSY	1	1	1			
2	5EB–12822–00	.BOLT, UNION	1	1	1			
3	5EB–13475–00	.GASKET	1	1	1			
4	5JW–13473–00	.O-RING	1	1	1			
5	5GH–13440–10	ELEMENT ASSY, OIL CLEANER	1	1	1			
6	90401–20145	BOLT, UNION	1	1	1			
7	3KS–13490–00	RELIEF VALVE ASSY	1	1	1			
8	93210–15566	O-RING	1	1	1			
9	5VX–13417–00	COVER, STRAINER	1	1	1			
10	90340–14132	.PLUG, STRAIGHT SCREW	1	1	1			
11	214–11198–01	.GASKET	1	1	1			
12	5VX–13414–00	GASKET, STRAINER COVER	1	1	1			
13	91317–06025	BOLT	12	12	12			
14	90110–06020	BOLT, HEXAGON SOCKET HEAD	1	1	1			
15	99530–08012	PIN, DOWEL	2	2	2			
16	90465–10030	CLAMP	1	1	1			

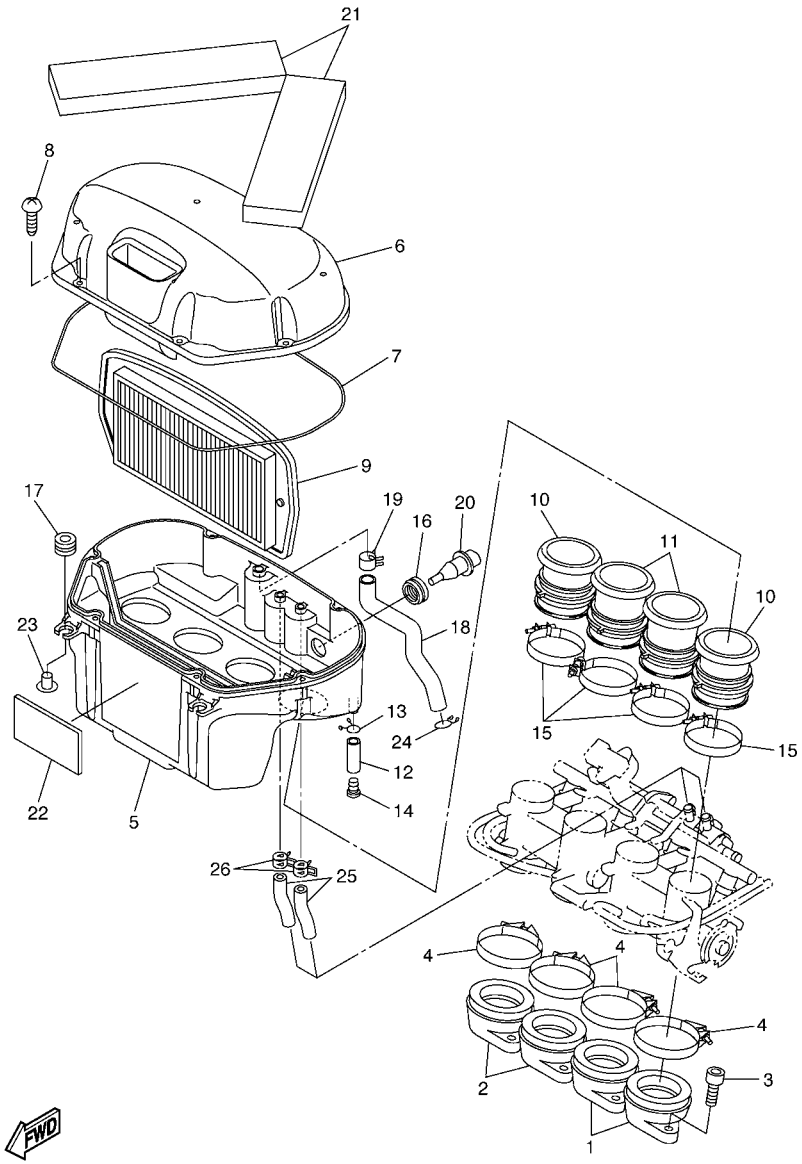

5VX3100-C090

FIG. 9 INTAKE

REF. NO.	PART NO.	DESCRIPTION	5VX8	5VX9	5VXA			REMARKS
1	5SL–13586–01	JOINT, CARBURETOR 1	2	2	2			
2	5SL–13596–01	JOINT, CARBURETOR 2	2	2	2			
3	91317–06020	BOLT	8	8	8			
4	90450–63003	HOSE CLAMP ASSY	4	4	4			
5	5VX–14411–00	CASE, AIR CLEANER 1	1	1	1			
6	5VX–14421–00	CASE, AIR CLEANER 2	1	1	1			
7	5VX–14452–00	SEAL	1	1	1			
8	97707–50025	SCREW, TAPPING	6	6	6			
9	5VX–14451–00	ELEMENT, AIR CLEANER	1	1	1			
10	5VX–14453–00	JOINT, AIR CLEANER 1	2	2	2			
11	5VX–14463–00	JOINT, AIR CLEANER 2	2	2	2			
12	90445–11795	HOSE (L30)	1	1	1			
13	90467–10041	CLIP	1	1	1			
14	90338–08174	PLUG	1	1	1			
15	90450–53002	HOSE CLAMP ASSY	4	4	4			
16	5CA–14435–00	GROMMET	1	1	1			
17	90480–12314	GROMMET	2	2	2			
18	5VX–15373–00	PIPE, BREATHER	1	1	1			
19	90467–15054	CLIP	1	1	1			
20	5CA–85886–00	SENSOR, AIR TEMPRATURE	1	1	1			
21	5VX–14409–00	DAMPER	2	2	2			
22	5EJ–2414H–00	DAMPER, PLATE 1	1	1	1			
23	90387–06073	COLLAR	2	2	2			
24	90467–14015	CLIP	1	1	1			
25	5VX–14148–01	PIPE	2	2	2			
26	90467–17089	CLIP	2	2	2			

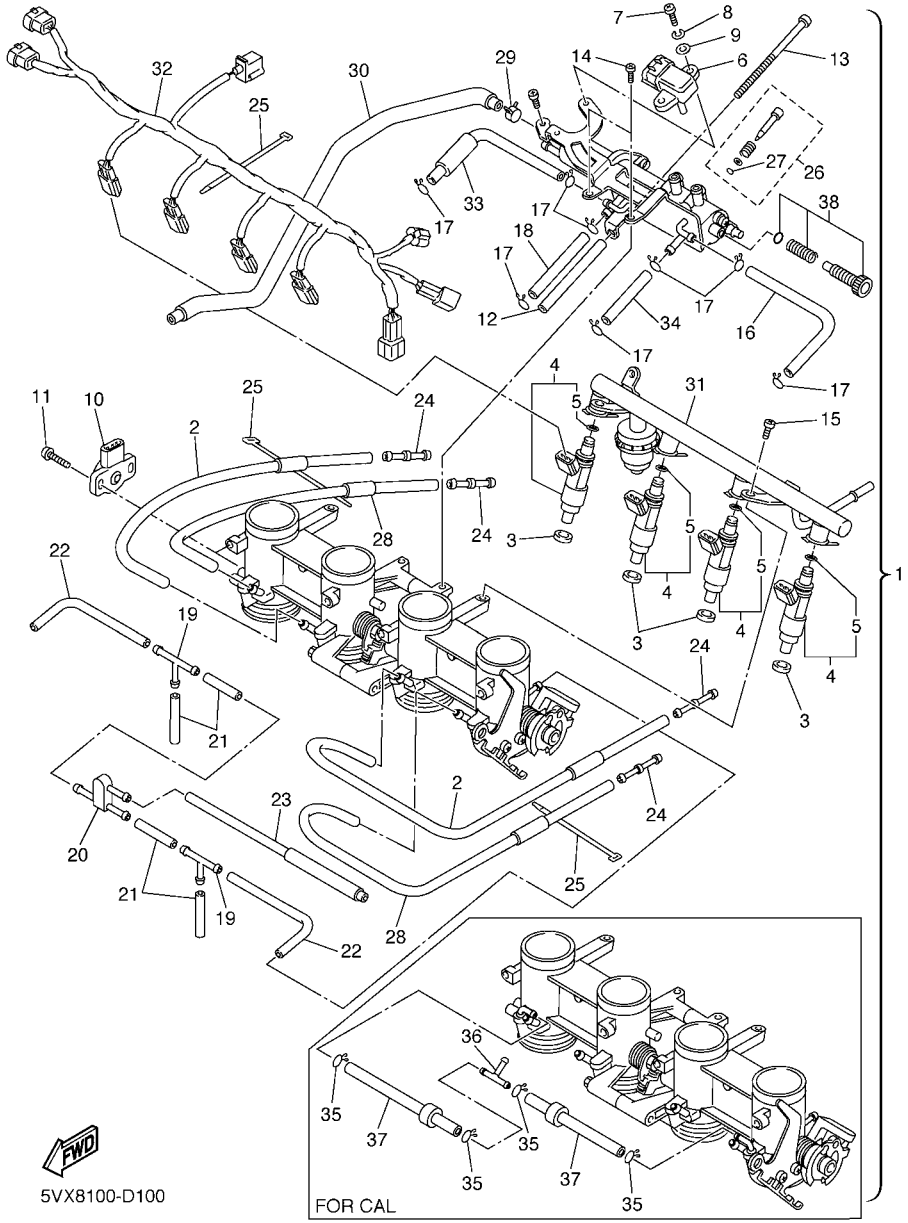

FIG. 10 INTAKE 2

REF. NO.	PART NO.	DESCRIPTION	5VX8	5VX9	5VXA			REMARKS
1	5VX–13750–01	THROTTLE BODY ASSY	1		1			
	5VX–13750–10	THROTTLE BODY ASSY		1				
2	5VX–14348–00	.PIPE 1	2	2	2			
3	90430–09002	.GASKET	4	4	4			
4	5VX–13761–00	.INJECTOR ASSY	4	4	4			
5	5PS–14147–00	..O-RING	1	1	1			
6	5VX–82380–00	.SENSOR, PRESSURE	1	1	1			
7	98507–05016	.SCREW, PAN HEAD	2	2	2			
8	92907–05100	.WASHER, SPRING	2	2	2			
9	92907–05600	.WASHER, PLATE	2	2	2			
10	5FL–85885–01	.THROTTLE SENSOR ASSY	1	1	1			
11	8CC–14216–10	.SCREW	2	2	2			
12	5VX–14149–00	.PIPE	1	1	1			
13	5VX–14565–00	.SCREW	1	1	1			
14	98507–05010	.SCREW, PAN HEAD	2	2	2			
15	98507–06012	.SCREW, PAN HEAD	2	2	2			
16	5VX–14396–00	.PIPE	1	1	1			
17	3UH–14937–00	.CLIP	8	8	8			
18	5VX–14987–00	.HOSE	1	1	1			
19	68V–24376–00	.PIPE, JOINT 1	2	2	2			
20	3XV–14251–00	.NIPPLE	1	1	1			
21	5FL–14348–10	.PIPE 1	4	4	4			
22	68V–13533–00	.HOSE, VACUUM SENSING 4	2	2	2			
23	5VX–1410E–00	.HOSE	1	1	1			
24	5PW–14251–00	.NIPPLE	4	4	4			
25	4KM–14137–00	.CLIP	3	3	3			
26	5JW–14104–00	.AIR SCREW SET	4	4	4			

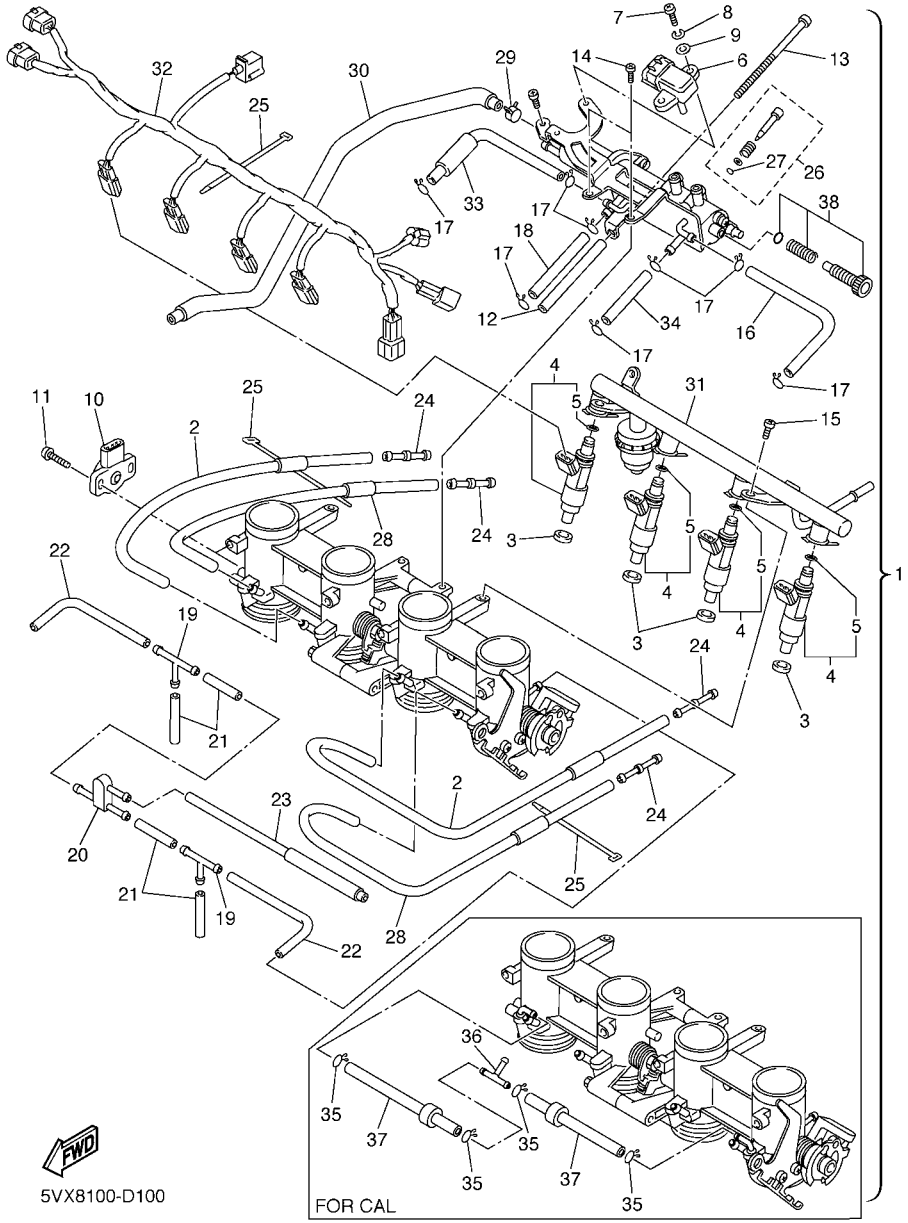

FIG. 10 INTAKE 2

REF. NO.	PART NO.	DESCRIPTION	5VX8	5VX9	5VXA			REMARKS
27	3H1–14147–00	..O-RING	1	1	1			
28	5VX–14349–00	.PIPE	2	2	2			
29	90467–11090	.CLIP	1	1	1			
30	5VX–1243E–00	.HOSE 2	1	1	1			
31	5VX–13160–00	.DELIVERY PIPE ASSY 1	1	1	1			
32	5VX–82386–00	.EXTENSION, WIRE HARNESS	1	1	1			
33	5VX–13533–00	.HOSE, VACUUM SENSING 4	1	1	1			
34	5VX–14807–00	.HOSE	1	1	1			
35	90467–10008	.CLIP		4				
36	90413–08012	.WAY 3		1				
37	5VX–14465–00	.PIPE		2				
38	5VX–14503–00	.ADJUST SCREW SET	1	1	1			

FIG. 11 AIR INDUCTION SYSTEM

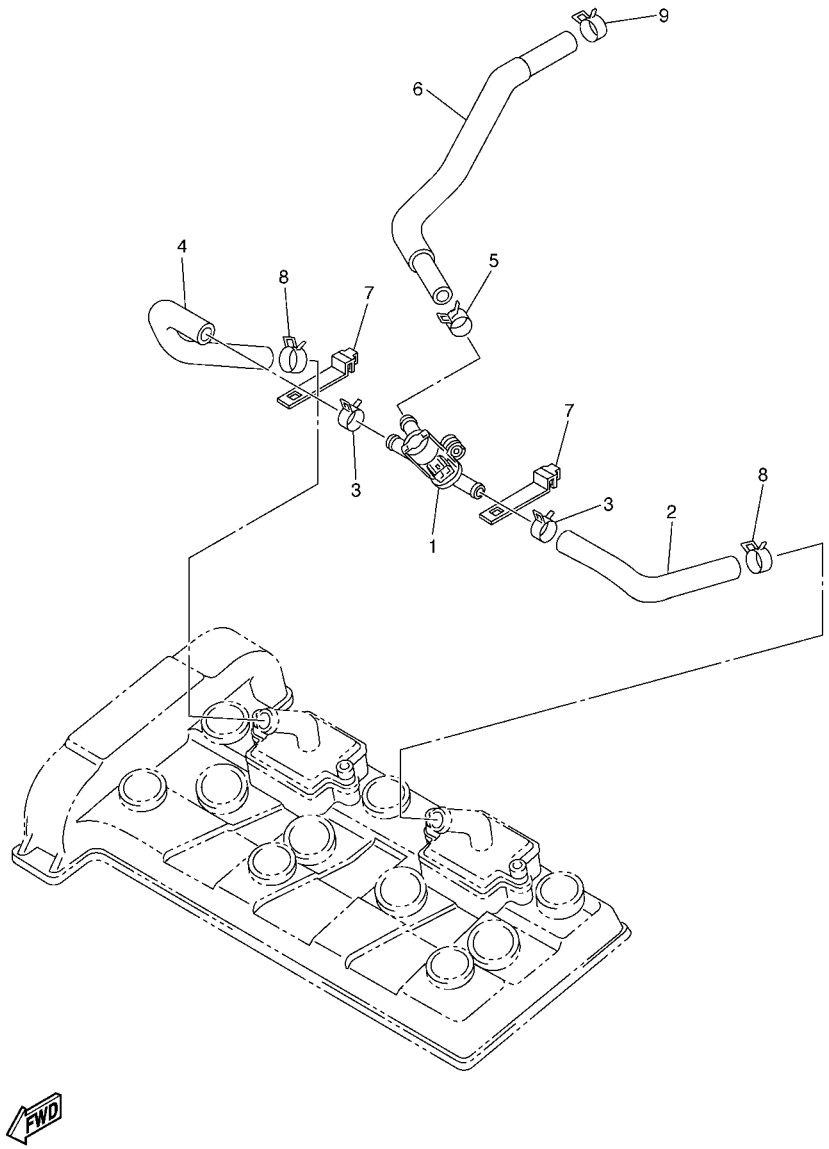

REF. NO.	PART NO.	DESCRIPTION	5VX8	5VX9	5VXA			REMARKS
1	5VX–14840–00	AIR CUT VALVE ASS'Y	1	1	1			
2	5VX–14881–00	HOSE, BEND 1	1	1	1			
3	90467–17089	CLIP	2	2	2			
4	5VX–14882–00	HOSE, BEND 2	1	1	1			
5	90467–17089	CLIP	1	1	1			
6	5VX–14883–00	HOSE, BEND 3	1	1	1			
7	5JW–14723–00	COVER 1	2	2	2			
8	90467–17003	CLIP	2	2	2			
9	90467–17128	CLIP	1	1	1			

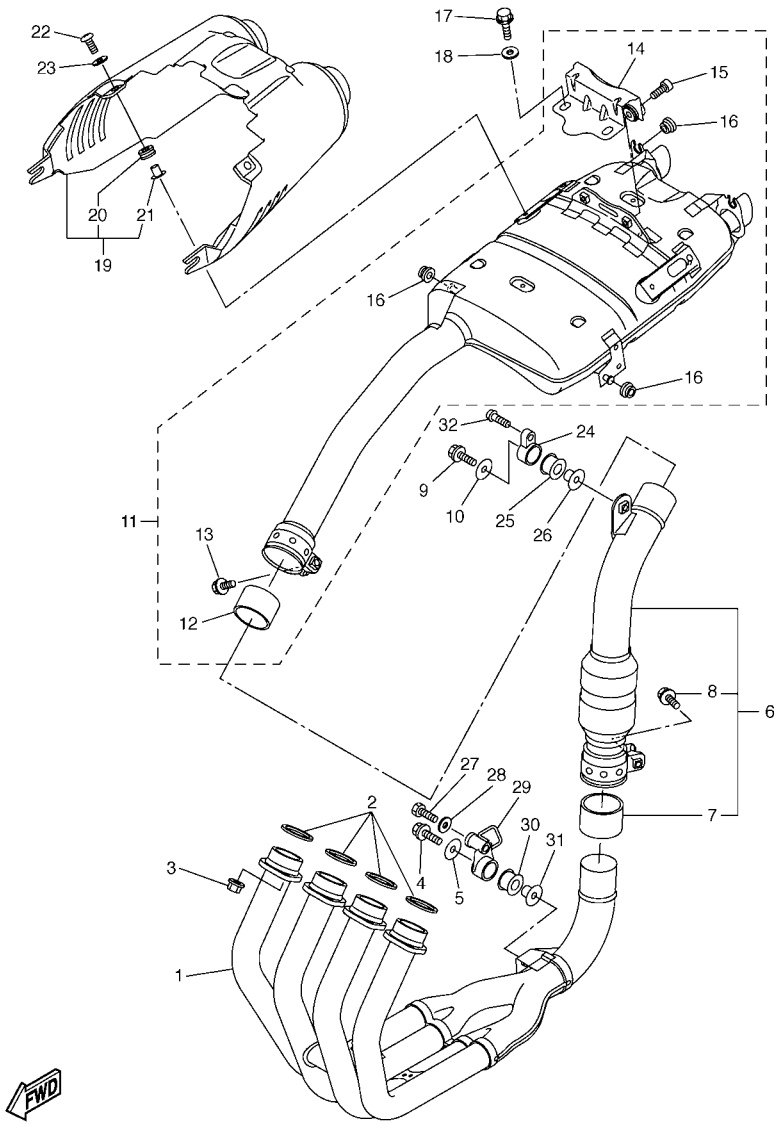

5VX1351-C120

FIG. 12 EXHAUST

REF. NO.	PART NO.	DESCRIPTION	5VX8	5VX9	5VXA			REMARKS
1	5VX–14602–00	EXHAUST PIPE COMP.	1	1	1			
2	3YF–14613–01	GASKET, EXHAUST PIPE	4	4	4			
3	90179–08410	NUT	8	8	8			
4	95817–08035	BOLT, FLANGE	1	1	1			
5	90201–08612	WASHER, PLATE	1	1	1			
6	5VX–14740–00	CATALYST ASSY.	1	1	1			
7	3XW–14714–00	.GASKET, MUFFLER	1	1	1			
8	95814–08045	.BOLT, FLANGE	1	1	1			
9	95817–08035	BOLT, FLANGE	1	1	1			
10	90201–08612	WASHER, PLATE	1	1	1			
11	5VX–14710–00	MUFFLER ASSY 1	1	1	1			
12	5EB–14714–01	.GASKET, MUFFLER	1	1	1			
13	95814–08045	.BOLT, FLANGE	1	1	1			
14	5VX–1467K–00	.BRACKET, SILENCER 3	1	1	1			
15	91317–08030	.BOLT	2	2	2			
16	90480–10332	.GROMMET	4	4	4			
17	95817–08014	BOLT, FLANGE	2	2	2			
18	90201–086A3	WASHER, PLATE	2	2	2			
19	5VX–14708–10	PROTECTOR ASSY	1	1	1			
20	90480–12006	.GROMMET	2	2	2			
21	90387–061N6	.COLLAR	2	2	2			
22	98907–06020	SCREW, BIND	2	2	2			
23	4FB–14766–00	WASHER, PROTECTOR	2	2	2			
24	5VX–21446–00	STAY, MUFFLER 2	1	1	1			
25	4XV–27424–00	DAMPER, MUFFLER	1	1	1			
26	90387–082W9	COLLAR	1	1	1			
27	90109–082A1	BOLT	1	1	1			

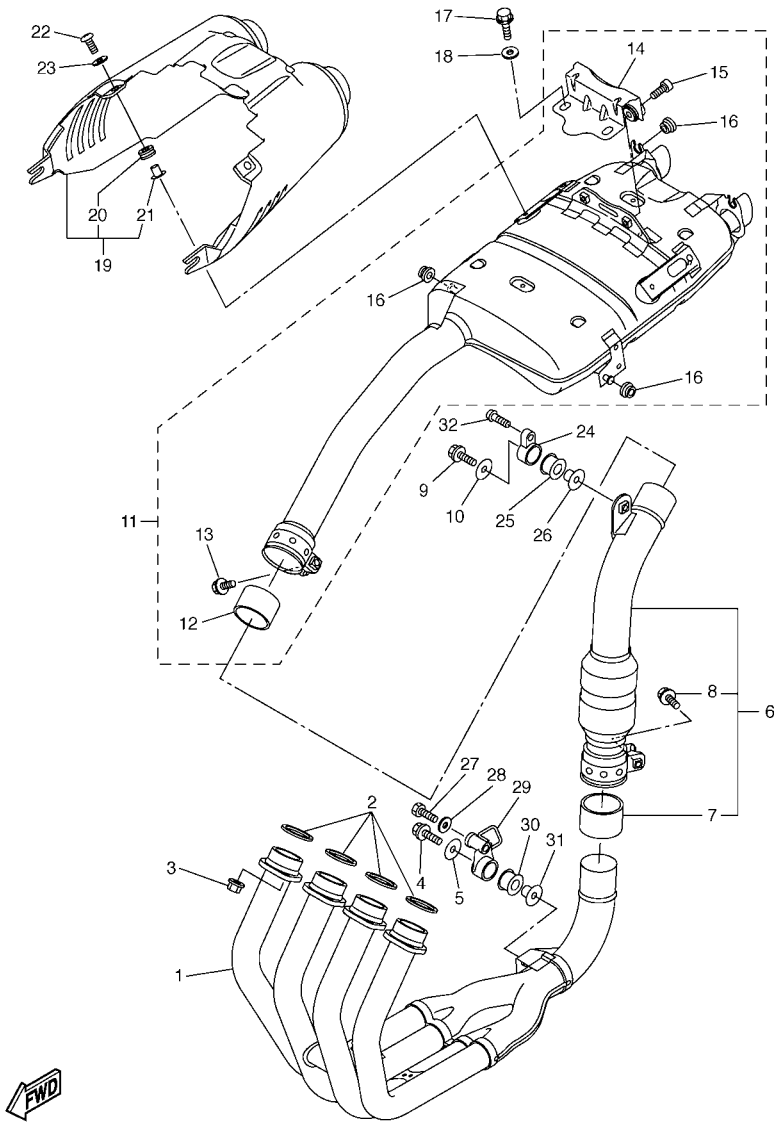

5VX1351-C120

FIG. 12 EXHAUST

REF. NO.	PART NO.	DESCRIPTION	5VX8	5VX9	5VXA			REMARKS
28	90201–086P8	WASHER, PLATE	1	1	1			
29	5VX–21446–10	STAY, MUFFLER 2	1	1	1			
30	4XV–27424–00	DAMPER, MUFFLER	1	1	1			
31	90387–082W9	COLLAR	1	1	1			
32	92017–08045	BOLT, BUTTON HEAD	1	1	1			

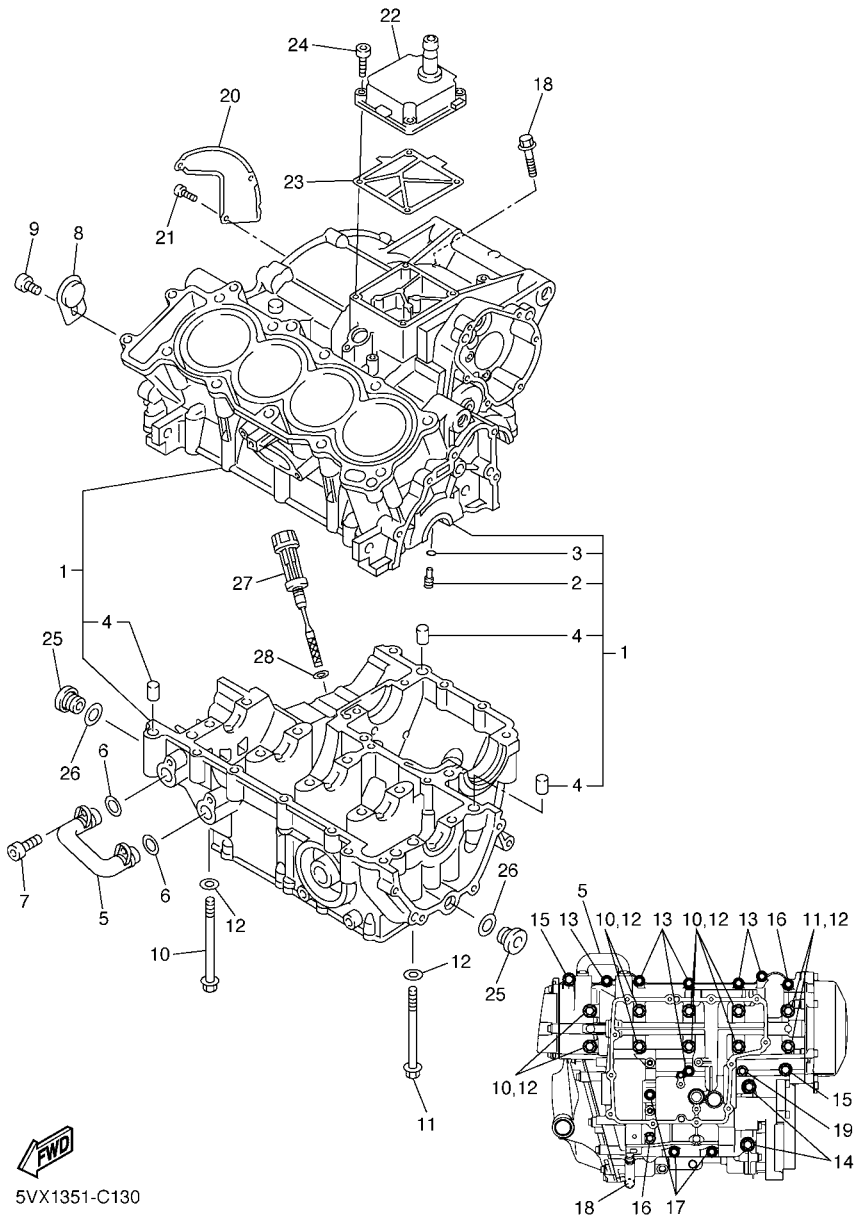

FIG. 13 CRANKCASE

REF. NO.	PART NO.	DESCRIPTION	5VX8	5VX9	5VXA			REMARKS
1	5VX–15100–00	CRANKCASE ASSY	1	1	1			
2	5EB–15155–00	.NOZZLE 3	4	4	4			
3	93210–04092	.O-RING	4	4	4			
4	99530–10014	.PIN, DOWEL	3	3	3			
5	5VX–13418–00	PIPE, OIL 2	1	1	1			
6	93210–14579	O-RING	2	2	2			
7	90110–06091	BOLT, HEXAGON SOCKET HEAD	2	2	2			
8	5SL–15189–00	PLUG	1	1	1			
9	90149–06020	SCREW	1	1	1			
10	90105–087A0	BOLT, FLANGE	8	8	8			
11	90105–086A9	BOLT, FLANGE	2	2	2			
12	90201–087K3	WASHER, PLATE	10	10	10			
13	95817–06055	BOLT, FLANGE	6	6	6			
14	95817–08065	BOLT, FLANGE	2	2	2			
15	90109–065G3	BOLT	2	2	2			
16	95817–06065	BOLT, FLANGE	2	2	2			
17	95817–06045	BOLT, FLANGE	3	3	3			
18	95817–06100	BOLT, FLANGE	1	1	1			
19	90105–06006	BOLT, FLANGE	1	1	1			
20	5SL–11165–00	PLATE, BREATHER	1	1	1			
21	90149–06020	SCREW	3	3	3			
22	5VX–15413–01	COVER	1	1	1			
23	5SL–15462–00	GASKET, CRANKCASE COVER 3	1	1	1			
24	91314–06025	BOLT	4	4	4			
25	36Y–15189–00	PLUG	2	2	2			
26	93210–16325	O-RING	2	2	2			
27	5EB–15362–00	PLUG, OIL LEVEL	1	1	1			

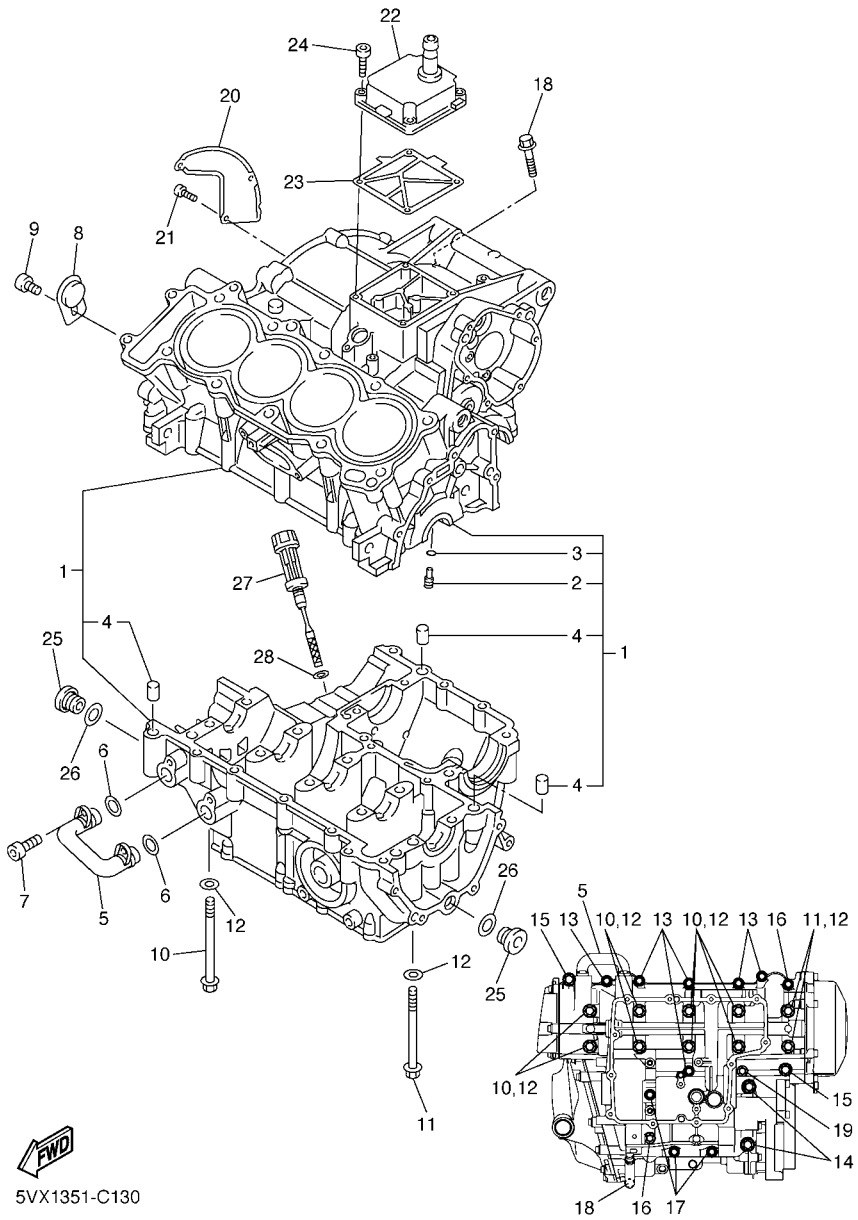

FIG. 13 CRANKCASE

REF. NO.	PART NO.	DESCRIPTION	5VX8	5VX9	5VXA			REMARKS
28	93210–09165	O-RING	1	1	1			

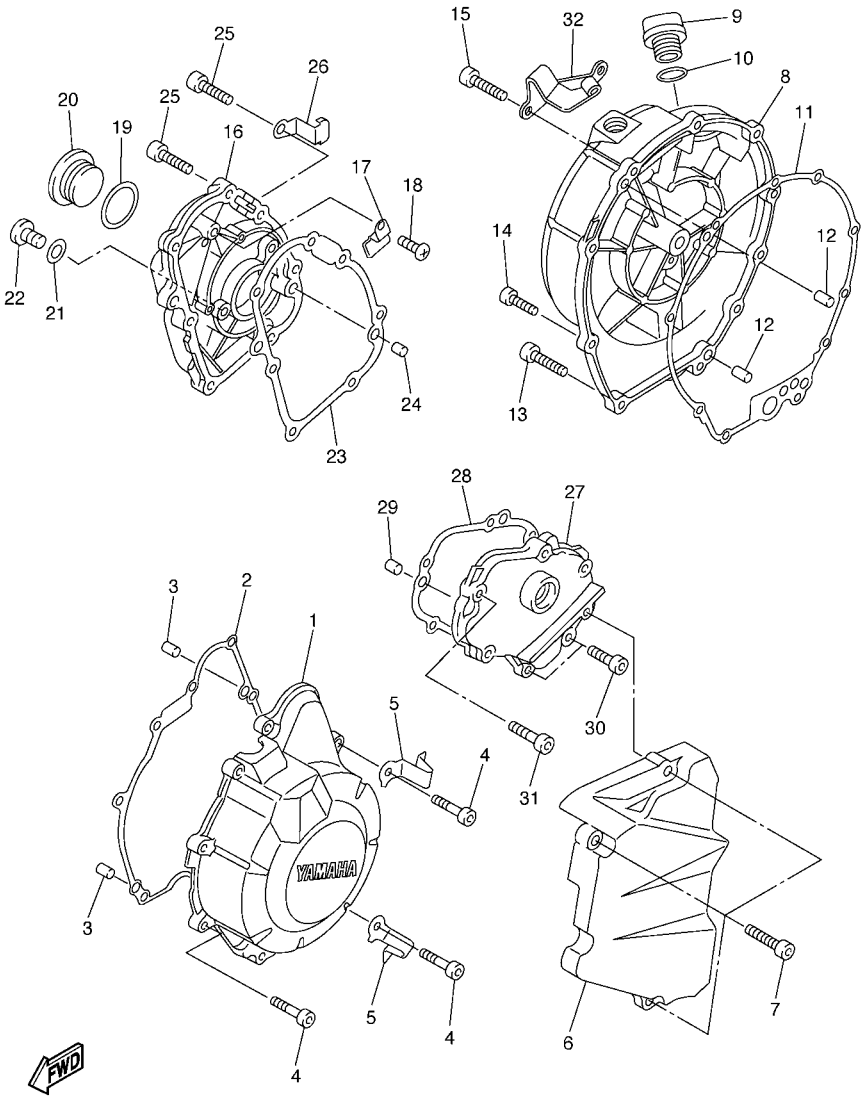

FIG. 14 CRANKCASE COVER 1

REF. NO.	PART NO.	DESCRIPTION	5VX8	5VX9	5VXA			REMARKS
1	5VX–15411–00	COVER, CRANKCASE 1	1	1	1			
2	5VX–15451–00	GASKET, CRANKCASE COVER 1	1	1	1			
3	99530–08012	PIN, DOWEL	2	2	2			
4	91314–06025	BOLT	9	9	9			
5	90465–08045	CLAMP	2	2	2			
6	5VX–15418–00	COVER, CHAIN CASE	1	1	1			
7	91314–06025	BOLT	3	3	3			
8	5VX–15421–00	COVER, CRANKCASE 2	1	1	1			
9	3F9–15362–00	PLUG, OIL LEVEL	1	1	1			
10	93210–27194	O-RING	1	1	1			
11	5SL–15461–00	GASKET, CRANKCASE COVER 2	1	1	1			
12	93608–17263	PIN, DOWEL	2	2	2			
13	91314–06025	BOLT	7	7	7			
14	90110–06022	BOLT, HEXAGON SOCKET HEAD	1	1	1			
15	91314–06030	BOLT	2	2	2			
16	5VX–15416–00	COVER, OIL PUMP	1	1	1			
17	90465–14011	CLAMP	1	1	1			
18	98507–06012	SCREW, PAN HEAD	1	1	1			
19	93210–32172	O-RING	1	1	1			
20	90340–32116	PLUG, STRAIGHT SCREW	1	1	1			
21	90430–08143	GASKET	1	1	1			
22	92014–08014	BOLT, BUTTON HEAD	1	1	1			
23	5SL–15456–00	GASKET, OIL PUMP COVER 1	1	1	1			
24	99530–08012	PIN, DOWEL	2	2	2			
25	91314–06020	BOLT	7	7	7			
26	90465–10035	CLAMP	1	1	1			
27	5VX–15425–00	COVER, GENERATOR 2	1	1	1			

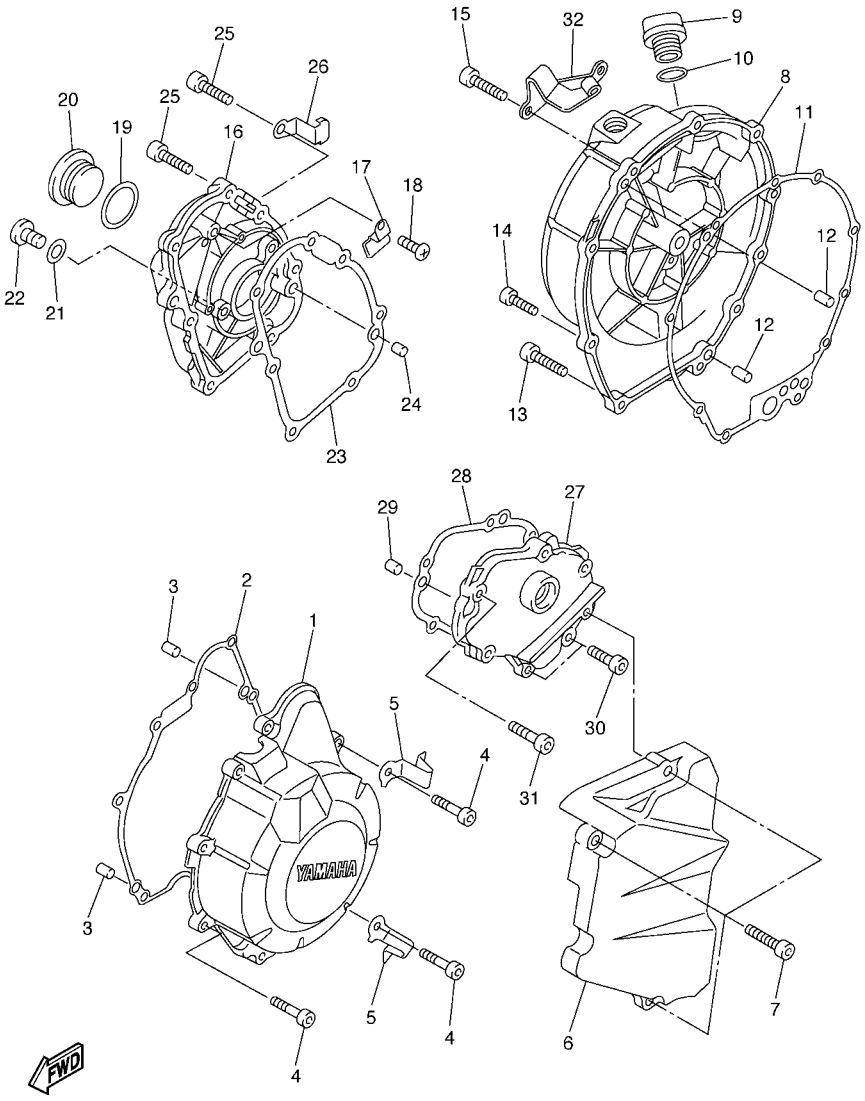

5VX1351-C140

FIG. 14 CRANKCASE COVER 1

REF. NO.	PART NO.	DESCRIPTION	5VX8	5VX9	5VXA			REMARKS
28	5VX–15463–00	GASKET, CARBURETOR COVER 2	1	1	1			
29	99530–08012	PIN, DOWEL	2	2	2			
30	91314–06020	BOLT	2	2	2			
31	91314–06025	BOLT	4	4	4			
32	5VX–15441–00	HOLDER, CLUTCH CABLE	1	1	1			

FIG. 15 STARTER

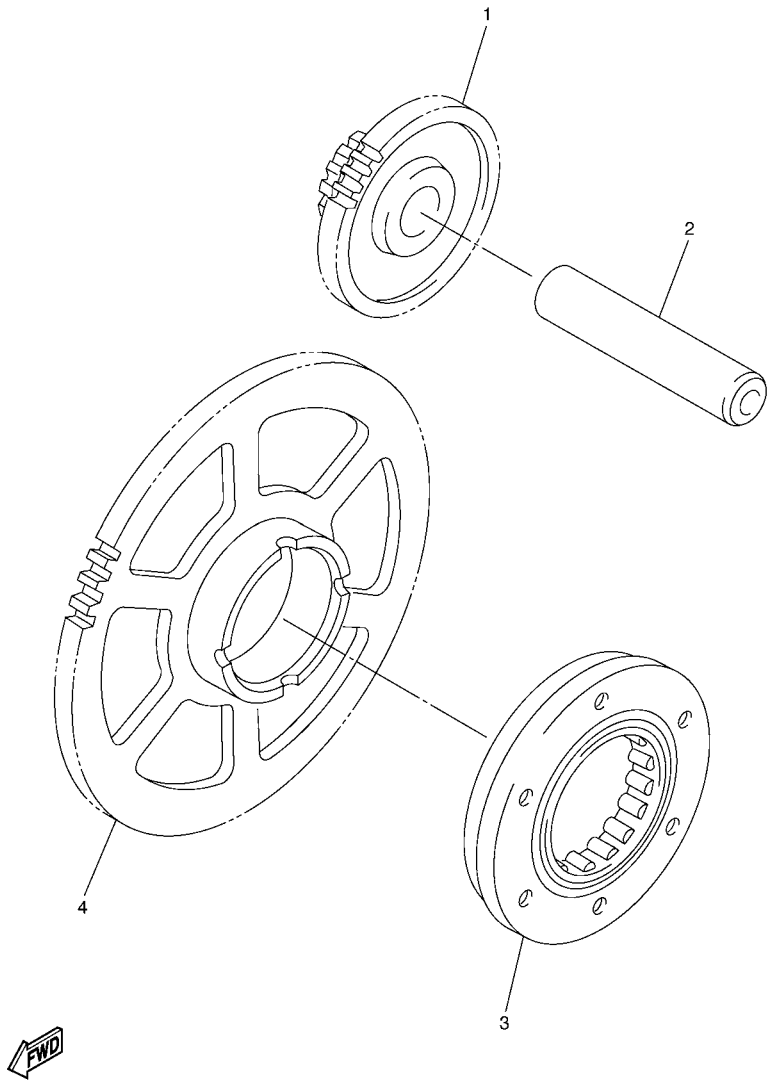

5SL1300-B150

REF. NO.	PART NO.	DESCRIPTION	5VX8	5VX9	5VXA			REMARKS
1	5SL–15512–00	GEAR, IDLER 1	1	1	1			
2	5EB–15521–00	SHAFT 1	1	1	1			
3	5SL–15590–00	STARTER ONE-WAY ASSY	1	1	1			
4	5MT–15515–00	GEAR 3	1	1	1			

FIG. 16 CLUTCH

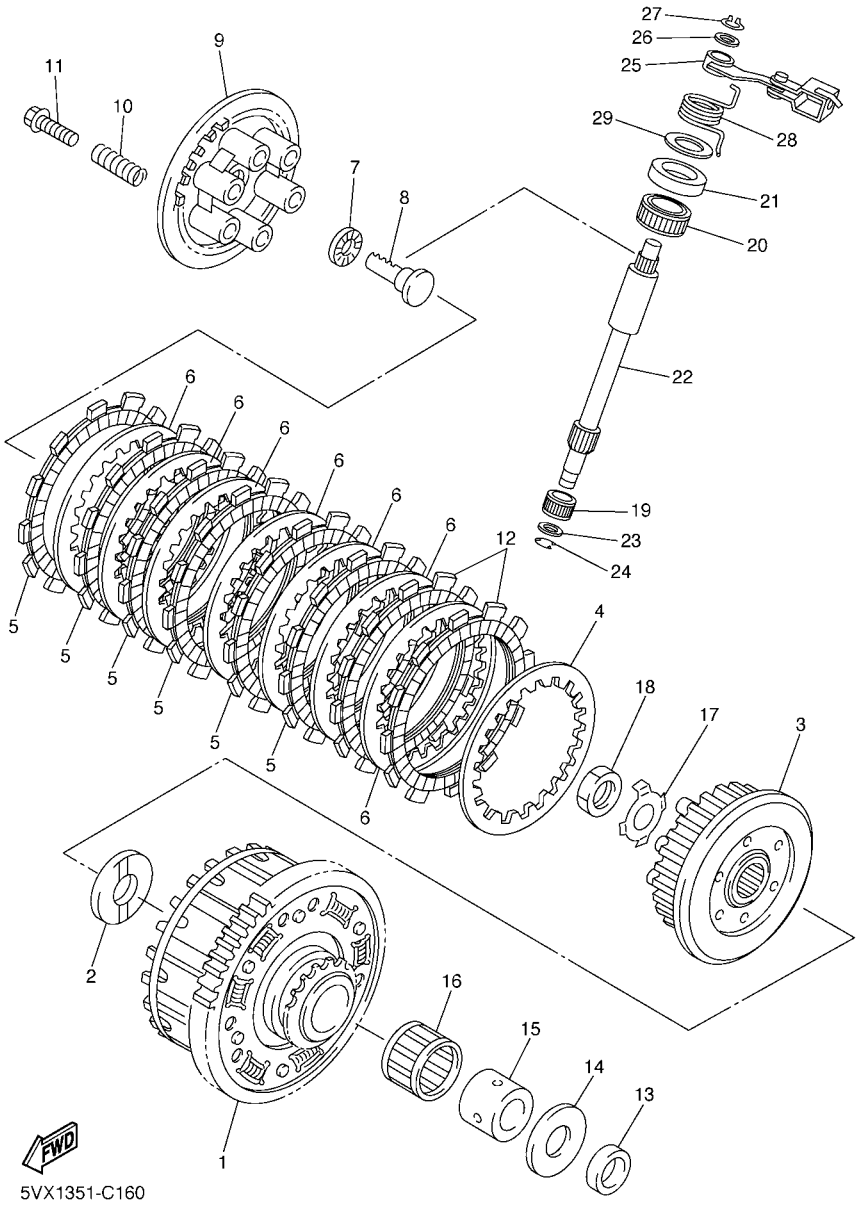

REF. NO.	PART NO.	DESCRIPTION	5VX8	5VX9	5VXA			REMARKS
1	5VX–16150–00	PRIMARY DRIVEN GEAR COMP.	1	1	1			
2	5EB–16154–00	PLATE, THRUST 1	1	1	1			
3	5VX–16371–00	BOSS, CLUTCH	1	1	1			
4	168–16324–00	PLATE, CLUTCH 1 (T=2.3)	1	1	1			
5	4FN–16321–00	PLATE, FRICTION	6	6	6			
6	3J2–16324–00	PLATE, CLUTCH 1 (T=2.0)	7	7	7			
7	93306–00304	BEARING (B6003C4)	1	1	1			
8	5EB–16356–01	ROD, PUSH 1	1	1	1			
9	5EB–16351–01	PLATE, PRESSURE 1	1	1	1			
10	90501–225A9	SPRING, COMPRESSION	6	6	6			
11	90159–06002	SCREW, WITH WASHER	6	6	6			
12	4H7–16321–02	PLATE, FRICTION	2	2	2			
13	90201–255A6	WASHER, PLATE	1	1	1			
14	1AE–16164–00	PLATE, THRUST 2	1	1	1			
15	90387–25010	COLLAR	1	1	1			
16	93310–340N8	BEARING	1	1	1			
17	90215–20004	WASHER, LOCK	1	1	1			
18	90170–20008	NUT	1	1	1			
19	93317–11020	BEARING	1	1	1			
20	93315–31502	BEARING	1	1	1			
21	93102–15212	OIL SEAL	1	1	1			
22	5VX–16382–00	AXLE, PUSH LEVER	1	1	1			
23	92907–08600	WASHER, PLATE	1	1	1			
24	99001–07600	CIRCLIP	1	1	1			
25	5VX–16340–00	PUSH LEVER ASSY	1	1	1			
26	90201–10119	WASHER, PLATE	1	1	1			
27	99009–10400	CIRCLIP	1	1	1			

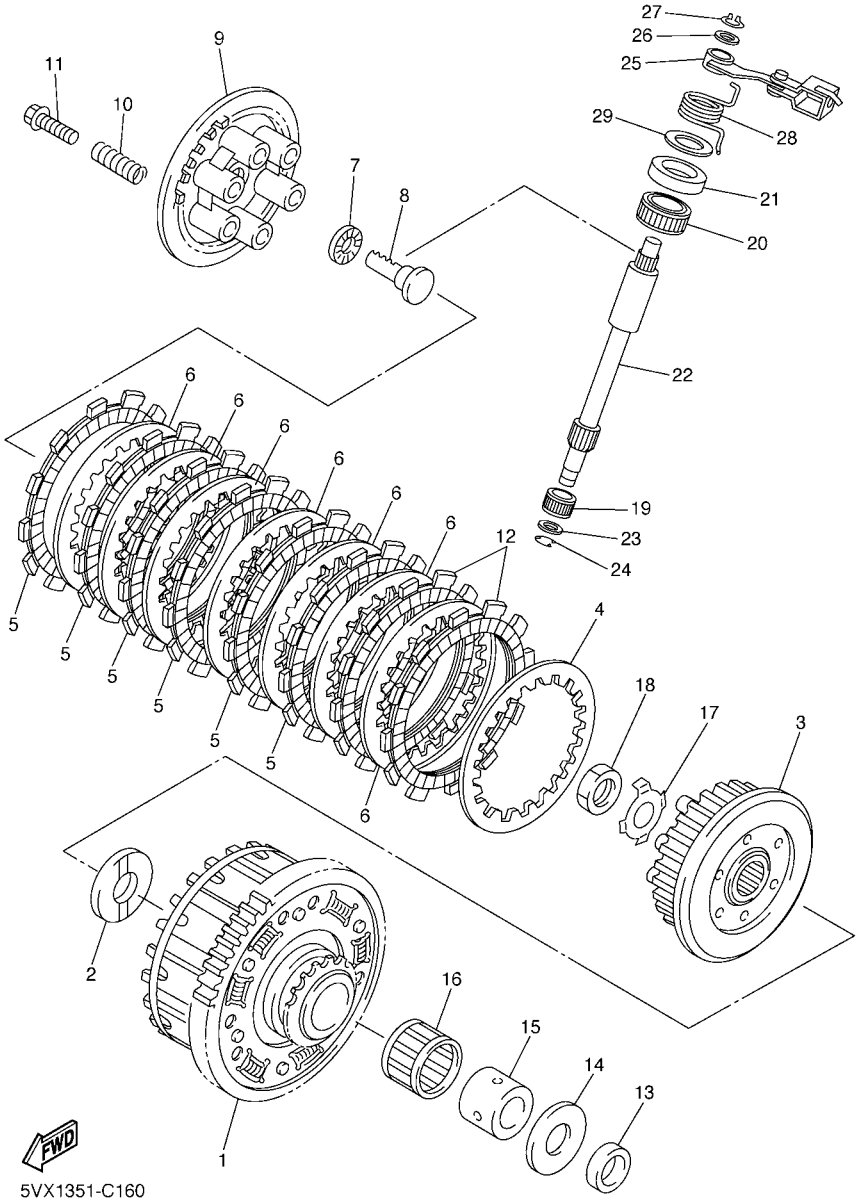

FIG. 16 CLUTCH

REF. NO.	PART NO.	DESCRIPTION	5VX8	5VX9	5VXA			REMARKS
28	90508–18016	SPRING, TORSION	1	1	1			
29	90201–15013	WASHER, PLATE	1	1	1			

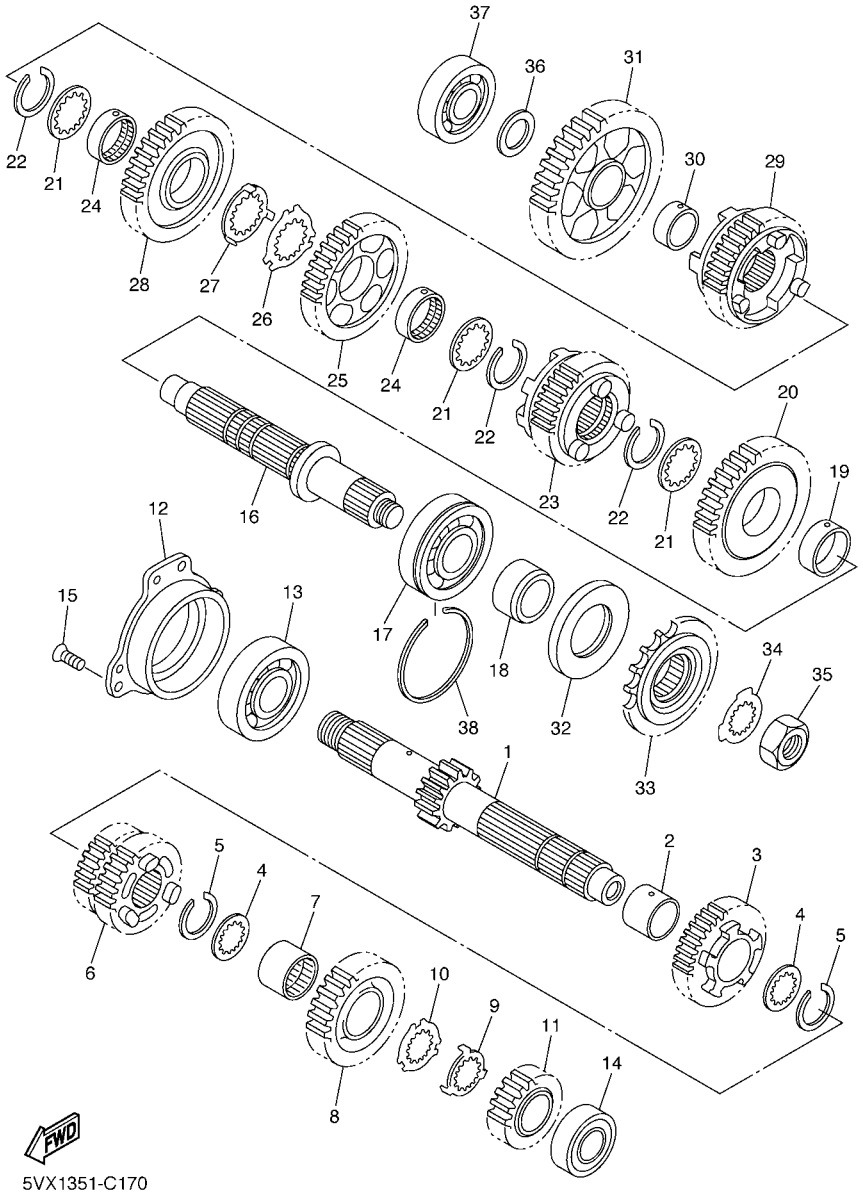

5VX1351-C170

FIG. 17 TRANSMISSION

REF. NO.	PART NO.	DESCRIPTION	5VX8	5VX9	5VXA			REMARKS
1	5SL–17411–00	AXLE, MAIN (13T)	1	1	1			
2	90387–253M6	COLLAR	1	1	1			
3	5VX–17151–00	GEAR, 5TH PINION (21T)	1	1	1			
4	90209–21332	WASHER	2	2	2			
5	93440–25186	CIRCLIP	2	2	2			
6	5SL–17131–20	GEAR, 3RD PINION (18T/24T)	1	1	1			
7	90387–2513E	COLLAR	1	1	1			
8	5SL–17161–00	GEAR, 6TH PINION (24T)	1	1	1			
9	90209–22352	WASHER	1	1	1			
10	90209–21351	WASHER	1	1	1			
11	5SL–17121–00	GEAR, 2ND PINION (19T)	1	1	1			
12	5EB–15163–01	HOUSING, BEARING 1	1	1	1			
13	93306–30525	BEARING (B6305)	1	1	1			
14	93306–20464	BEARING	1	1	1			
15	90151–06008	SCREW, COUNTERSUNK	3	3	3			
16	5SL–17421–00	AXLE, DRIVE	1	1	1			
17	93306–30546	BEARING (B6305A5 SPECIAL)	1	1	1			
18	90387–2504A	COLLAR	1	1	1			
19	90387–2813C	COLLAR	1	1	1			
20	5VX–17221–00	GEAR, 2ND WHEEL (37T)	1	1	1			
21	90209–25342	WASHER	3	3	3			
22	93440–28062	CIRCLIP	3	3	3			
23	5VX–17261–00	GEAR, 6TH WHEEL (26T)	1	1	1			
24	90387–2813D	COLLAR	2	2	2			
25	5SL–17241–00	GEAR, 4TH WHEEL (32T)	1	1	1			
26	90209–25349	WASHER	1	1	1			
27	90209–25350	WASHER	1	1	1			

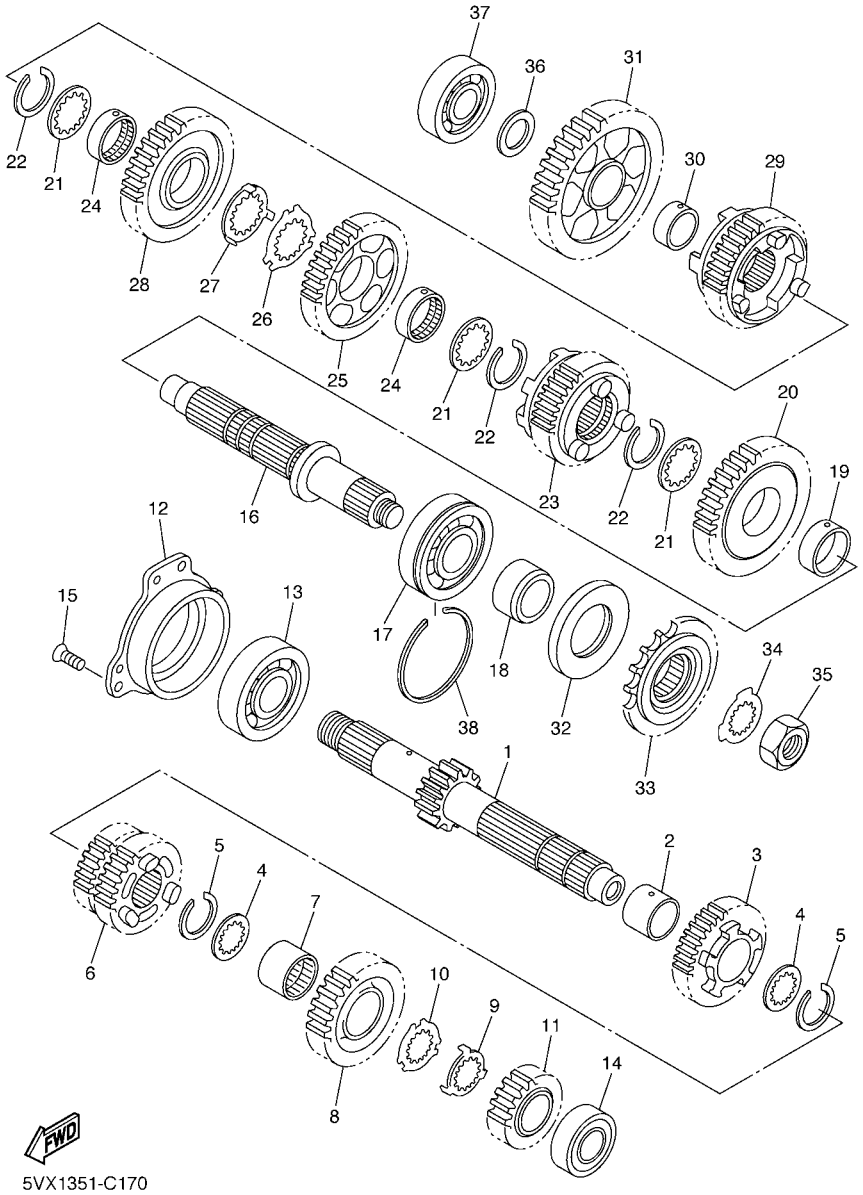

FIG. 17 TRANSMISSION

REF. NO.	PART NO.	DESCRIPTION	5VX8	5VX9	5VXA			REMARKS
28	5SL–17231–00	GEAR, 3RD WHEEL (28T)	1	1	1			
29	5VX–17251–00	GEAR, 5TH WHEEL (25T)	1	1	1			
30	90387–2202V	COLLAR	1	1	1			
31	5SL–17211–00	GEAR, 1ST WHEEL (37T)	1	1	1			
32	93102–35423	OIL SEAL	1	1	1			
33	5VX–17460–00	SPROCKET, DRIVE (16T)	1	1	1			
34	90215–21290	WASHER, LOCK	1	1	1			
35	90179–18667	NUT	1	1	1			
36	90201–20278	WASHER, PLATE	1	1	1			
37	93306–20464	BEARING	1	1	1			
38	278–17424–01	CIRCLIP 1	1	1	1			

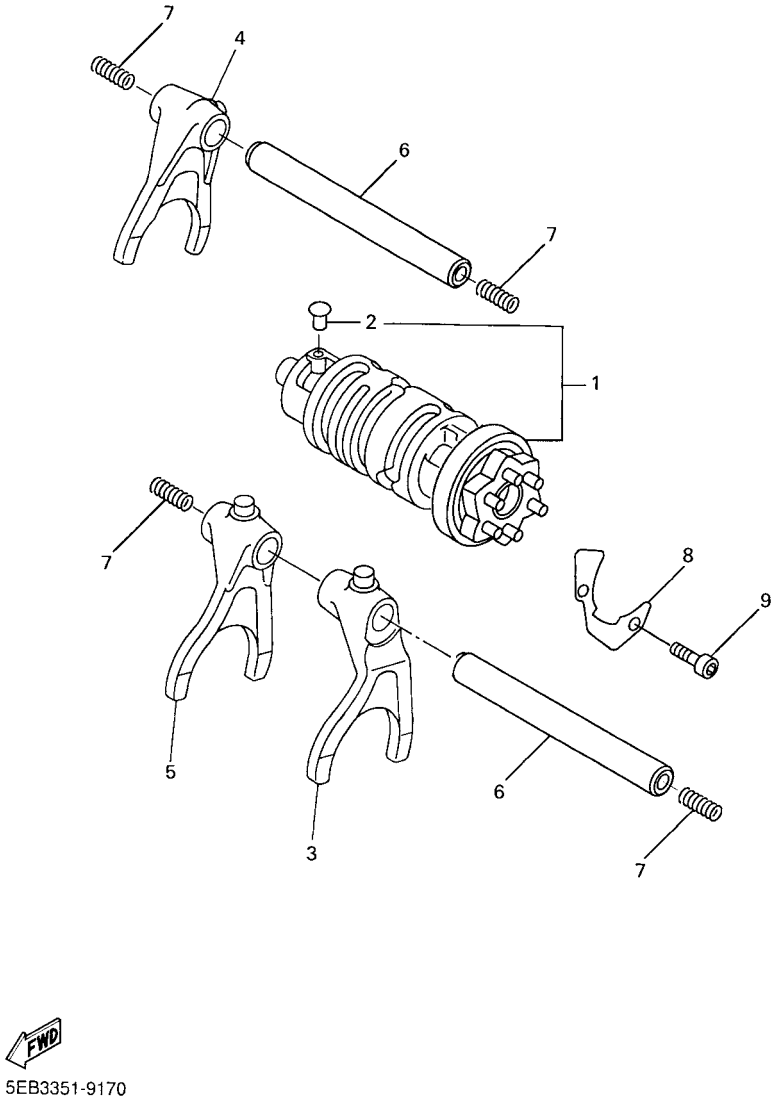

FIG. 18 SHIFT CAM & FORK

REF. NO.	PART NO.	DESCRIPTION	5VX8	5VX9	5VXA			REMARKS
1	5VX–18540–00	SHIFT CAM ASSY	1	1	1			
2	136–18542–00	.POINT, NEUTRAL	1	1	1			
3	5SL–18511–00	FORK, SHIFT 1	1	1	1			
4	5MT–18512–00	FORK, SHIFT 2	1	1	1			
5	5EB–18513–00	FORK, SHIFT 3	1	1	1			
6	4XV–18531–00	BAR, SHIFT FORK GUIDE 1	2	2	2			
7	90501–064L1	SPRING, COMPRESSION	4	4	4			
8	5EB–18536–00	STOPPER, SHIFT BAR	1	1	1			
9	90110–06018	BOLT, HEXAGON SOCKET HEAD	2	2	2			

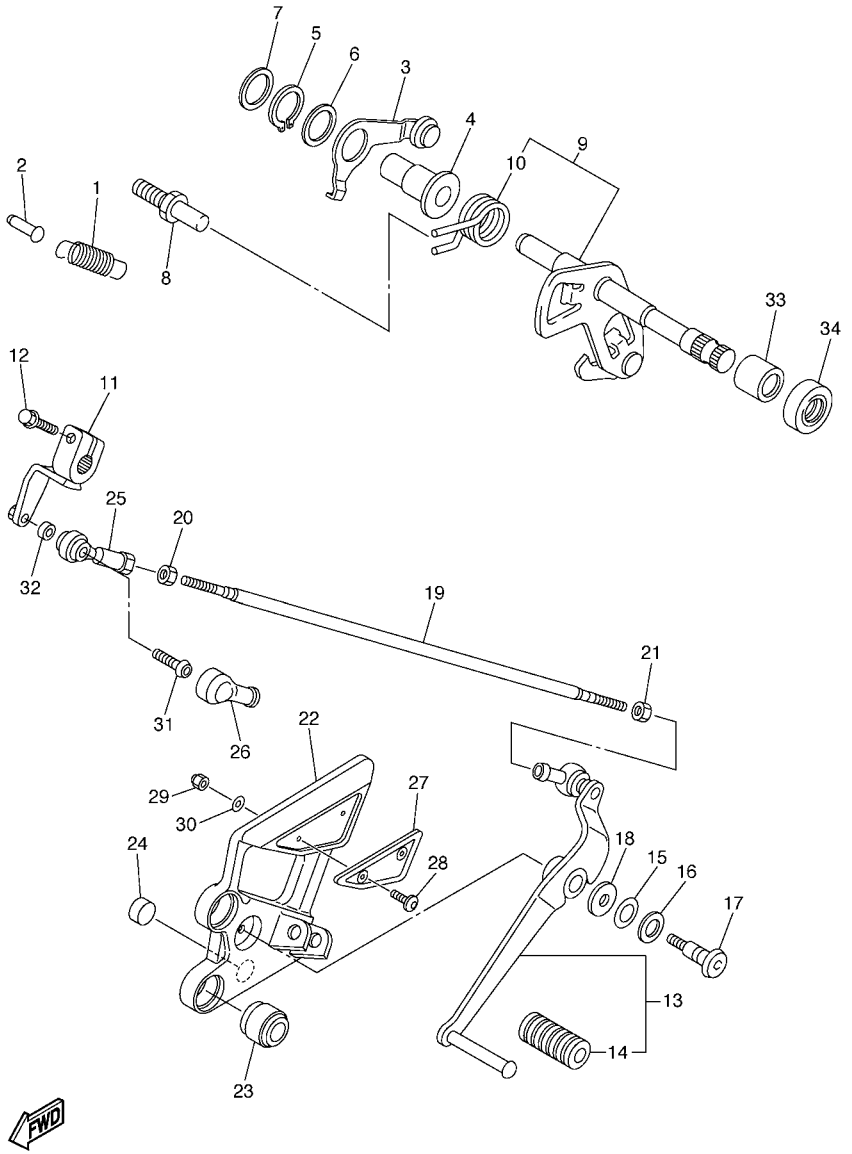

5VX6300-D190

FIG. 19 SHIFT SHAFT

REF. NO.	PART NO.	DESCRIPTION	5VX8	5VX9	5VXA			REMARKS
1	90506–14003	SPRING, TENSION	1	1	1			
2	132–16346–00	HOOK, SPRING	1	1	1			
3	5VX–18140–00	STOPPER LEVER ASSY	1	1	1			
4	90387–127V3	COLLAR	1	1	1			
5	99009–17400	CIRCLIP	1	1	1			
6	90201–177G4	WASHER, PLATE	1	1	1			
7	90201–154E8	WASHER, PLATE (T=1.0)	1	1	1			
8	5SL–18127–00	STOPPER, SCREW	1	1	1			
9	5VX–18101–11	SHIFT SHAFT ASSY	1	1	1			
10	90508–295B2	.SPRING, TORSION	1	1	1			
11	5VX–18112–01	ARM, SHIFT	1	1	1			
12	95824–06020	BOLT, FLANGE	1	1	1			
13	5VX–18110–00	SHIFT PEDAL ASSY	1	1	1			
14	5EB–18113–00	.COVER, SHIFT PEDAL	1	1	1			
15	90201–12013	WASHER, PLATE	1	1	1			
16	90206–12074	WASHER, WAVE	1	1	1			
17	4BP–27434–01	BOLT	1	1	1			
18	90201–08784	WASHER, PLATE	1	1	1			
19	5VX–18115–01	ROD, SHIFT	1	1	1			
20	90170–06228	NUT(COUNTER CLOCKWISE)	1	1	1			
21	95304–06700	NUT	1	1	1			
22	5VX–27442–10	BRACKET 2	1	1	1			
23	5VX–27424–00	DAMPER, FOOTREST 2	2	2	2			
24	5VX–27114–00	STOPPER, MAIN STAND	1	1	1			
25	5VX–18116–00	JOINT, ROD 1	1	1	1			
26	5VX–18154–00	COVER, DUST	1	1	1			
27	5VX–27445–00	PLATE 1	1	1	1			

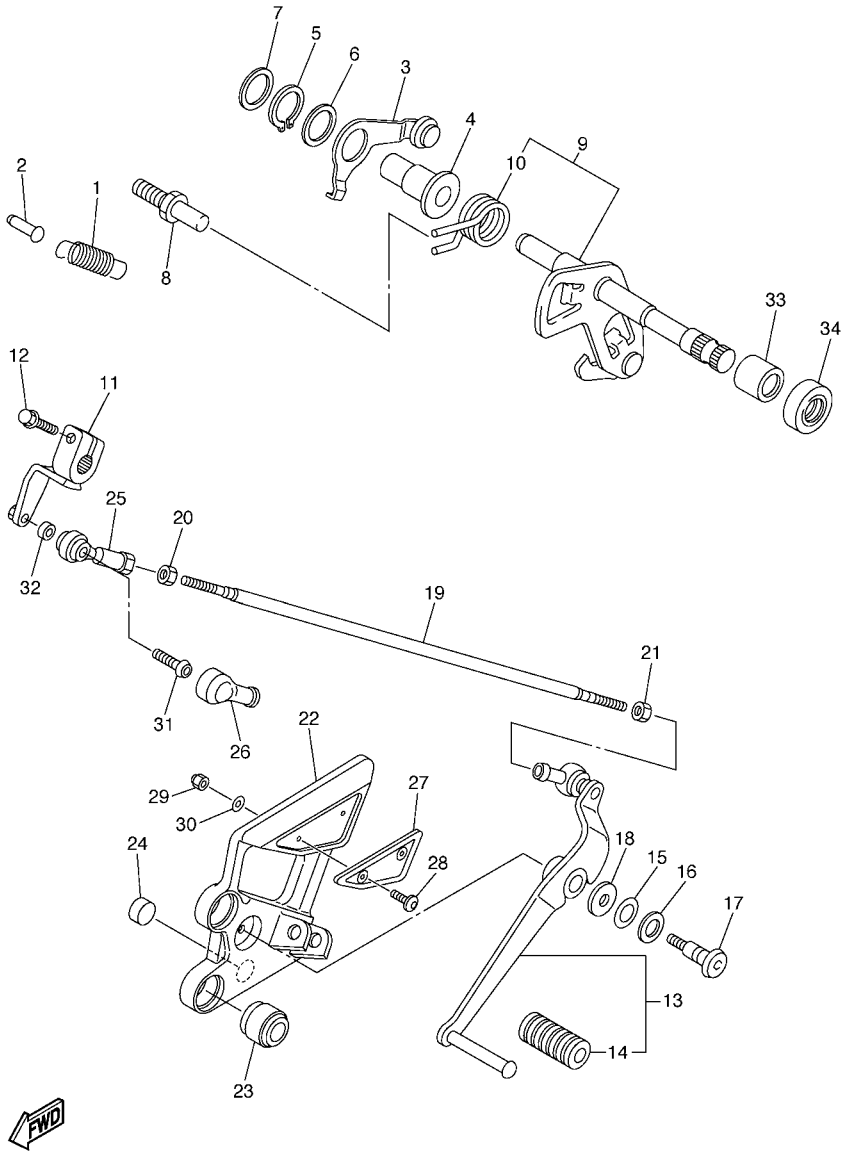

5VX6300-D190

FIG. 19 SHIFT SHAFT

REF. NO.	PART NO.	DESCRIPTION	5VX8	5VX9	5VXA			REMARKS
28	90111–05003	BOLT	2	2	2			
29	95607–05100	NUT, U	2	2	2			
30	92990–05200	WASHER, PLAIN	2	2	2			
31	90111–06019	BOLT	1	1	1			
32	90387–06372	COLLAR	1	1	1			
33	93317–11287	BEARING	1	1	1			
34	93101–12004	OIL SEAL	1	1	1			

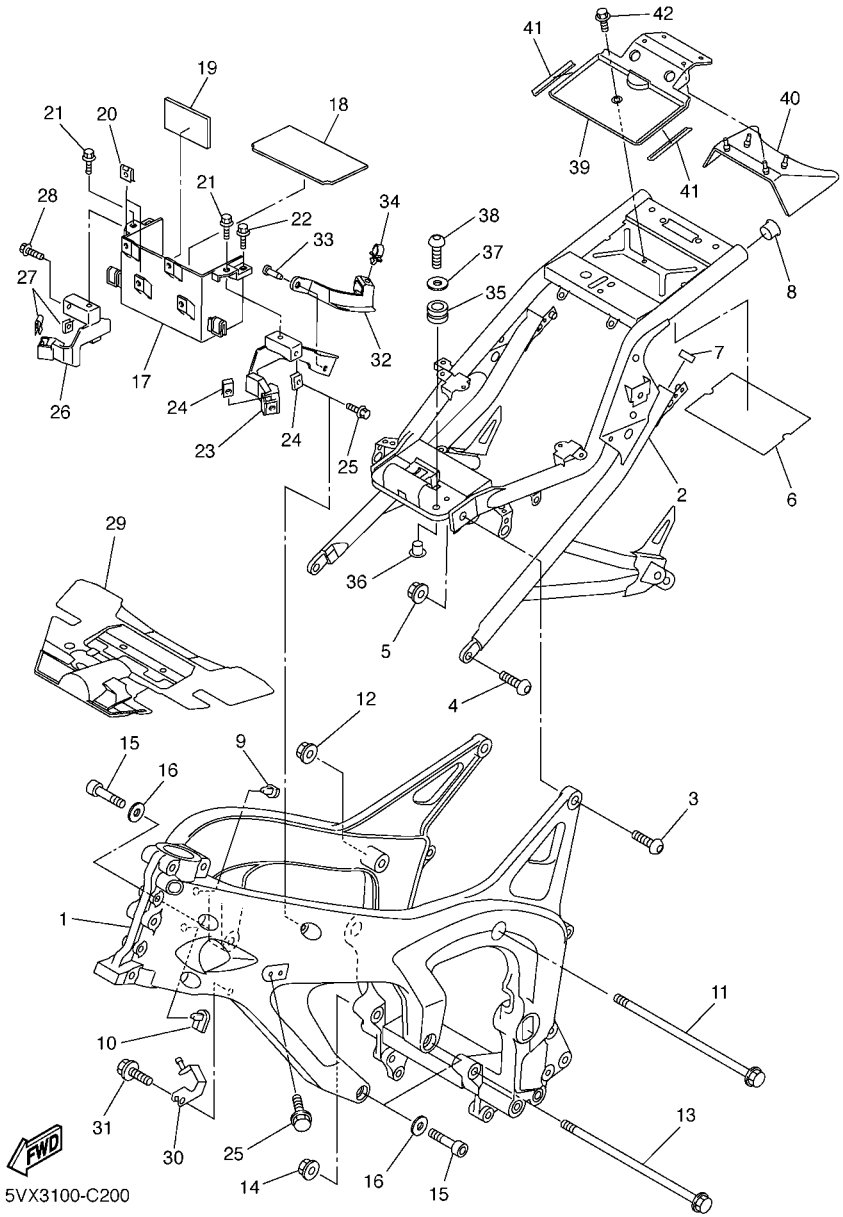

FIG. 20 FRAME

REF. NO.	PART NO.	DESCRIPTION	5VX8	5VX9	5VXA			REMARKS
1	5VX–21110–00	FRAME COMP.	1	1	1			
2	5VX–21190–01	REAR FRAME COMP.	1	1	1			
3	90149–10006	SCREW	2	2	2			
4	90149–10012	SCREW	2	2	2			
5	95607–10200	NUT, U FLANGE	2	2	2			
6	5VX–21268–00	SEAL	1	1	1			
7	3YJ–24481–00	PLUG	2	2	2			
8	90338–21145	PLUG	1	1	1			
9	5VX–21279–00	PLUG, BLIND	1	1	1			
10	5VX–21289–00	PLUG, BLIND	1	1	1			
11	90105–10032	BOLT, FLANGE	1	1	1			
12	90185–10002	NUT, SELF-LOCKING	1	1	1			
13	90105–10N53	BOLT, FLANGE	1	1	1			
14	90185–10002	NUT, SELF-LOCKING	1	1	1			
15	91314–10050	BOLT	3	3	3			
16	90201–10020	WASHER, PLATE	3	3	3			
17	5VX–2177G–00	BOX, BATTERY	1	1	1			
18	5VX–82122–00	SEAT, BATTERY	1	1	1			
19	5EJ–2414H–00	DAMPER, PLATE 1	1	1	1			
20	90183–06053	NUT, SPRING	2	2	2			
21	90109–06060	BOLT	2	2	2			
22	95807–06025	BOLT, FLANGE	2	2	2			
23	5VX–21238–00	BRACKET	1	1	1			
24	90183–060A1	NUT, SPRING	2	2	2			
25	90105–06557	BOLT, FLANGE	2	2	2			
26	5VX–21239–00	BRACKET 2	1	1	1			
27	90183–060A1	NUT, SPRING	2	2	2			

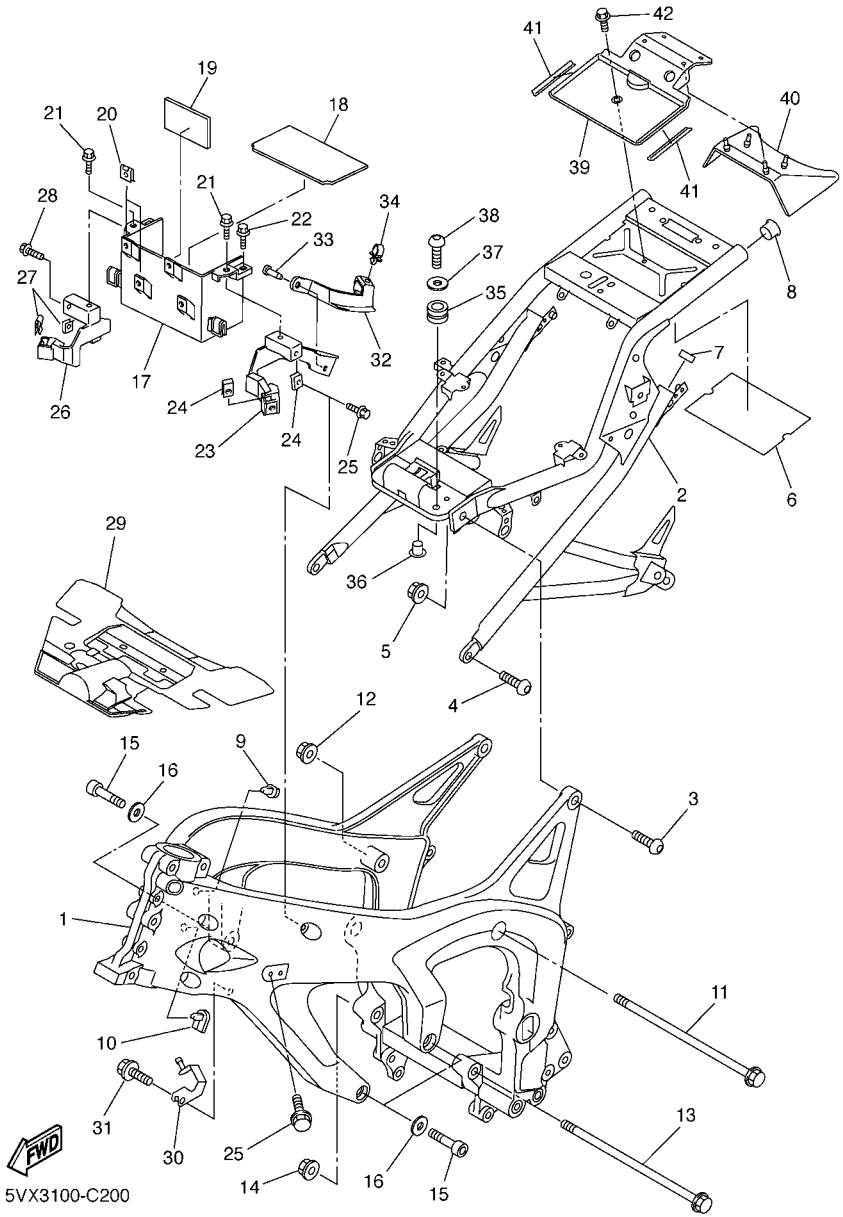

FIG. 20 FRAME

REF. NO.	PART NO.	DESCRIPTION	5VX8	5VX9	5VXA			REMARKS
28	90105–06557	BOLT, FLANGE	2	2	2			
29	5VX–2117M–01	COVER 2	1	1	1			
30	5VX–21249–00	BRACKET	1	1	1			
31	95027–06012	BOLT, FLANGE	1	1	1			
32	5VX–2135F–00	COVER	1	1	1			
33	90269–08066	RIVET	2	2	2			
34	90464–15157	CLAMP	1	1	1			
35	90480–12237	GROMMET	2	2	2			
36	90387–06078	COLLAR	2	2	2			
37	90201–06055	WASHER, PLATE	2	2	2			
38	92017–06020	BOLT, BUTTON HEAD	2	2	2			
39	5VX–2139W–00	COVER	1	1	1			
40	5VX–2139R–00	COVER 2	1	1	1			
41	5VX–21269–00	SEAL	2	2	2			
42	90109–067F4	BOLT	1	1	1			

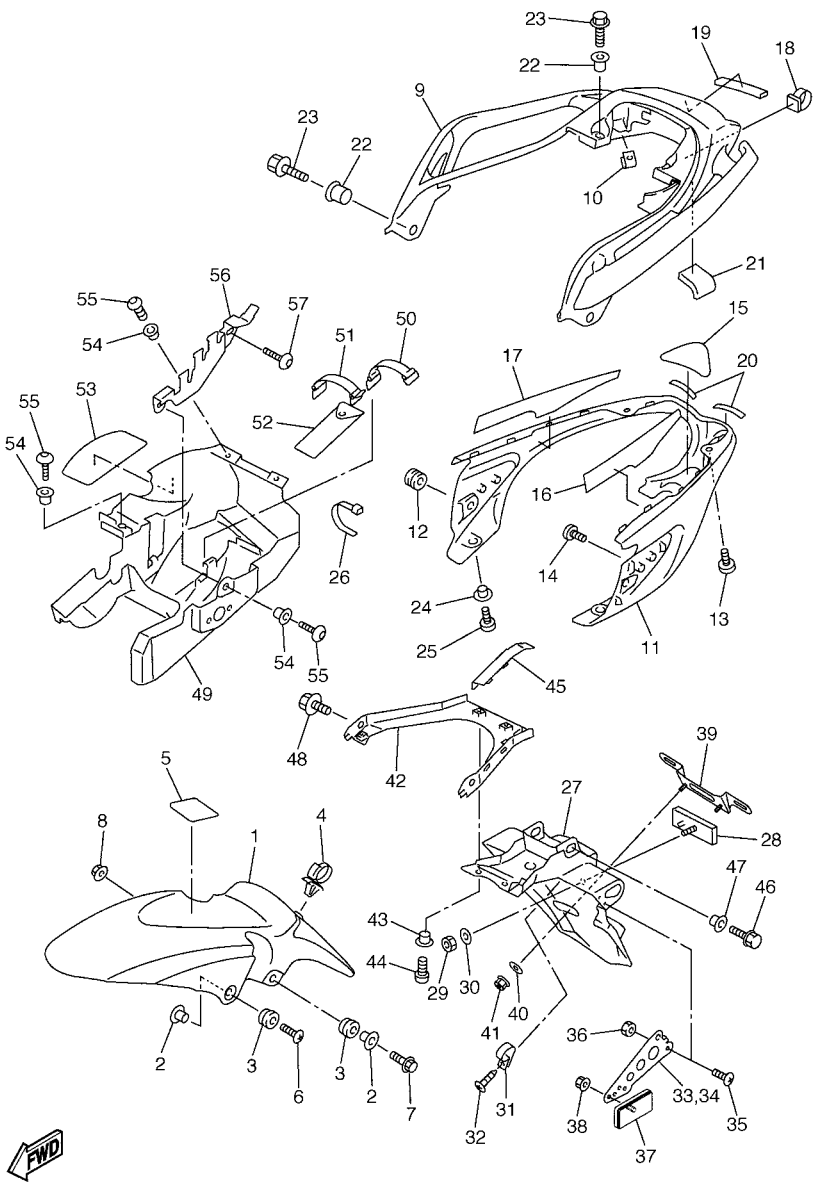

5VX3100-C210

FIG. 21 FENDER

REF. NO.	PART NO.	DESCRIPTION	5VX8	5VX9	5VXA			REMARKS
1	5VX–21511–00	FENDER, FRONT	1	1	1			UR FOR DPBML
	5VX–21511–10	FENDER, FRONT	1	1	1			UR FOR BS4
2	90387–065J6	COLLAR	4	4	4			
3	90480–12072	GROMMET	4	4	4			
4	90464–18002	CLAMP	1	1	1			
5	5VX–21575–00	SEAL 1	1	1	1			
6	90154–06061	SCREW, BINDING	2	2	2			
7	95024–06025	BOLT, FLANGE	2	2	2			
8	90179–06403	NUT	2	2	2			
9	5VX–24773–00–P1	HANDLE, SEAT	1	1	1			UR DPBML
	5VX–24773–00–P5	HANDLE, SEAT	1	1	1			UR BS4
10	90183–05061	NUT, SPRING	2	2	2			
11	5VX–21651–00	COVER, REAR FENDER	1	1	1			
12	90480–13398	GROMMET	2	2	2			
13	98907–05012	SCREW, BIND	2	2	2			
14	97707–50012	SCREW, TAPPING	2	2	2			
15	5VX–21669–00	SEAL	1	1	1			
16	5VX–21732–00	SEAL 1	1	1	1			
17	5VX–21735–01	SEAL 2	1	1	1			
18	90464–14002	CLAMP	1	1	1			
19	5VX–88158–00	DAMPER	1	1	1			
20	5VX–21639–00	DAMPER 2	2	2	2			
21	31A–28217–00	DAMPER 1	1	1	1			
22	90387–09003	COLLAR	4	4	4			
23	95827–08025	BOLT, FLANGE	4	4	4			
24	90387–064J1	COLLAR	2	2	2			
25	98907–06012	SCREW, BIND	2	2	2			

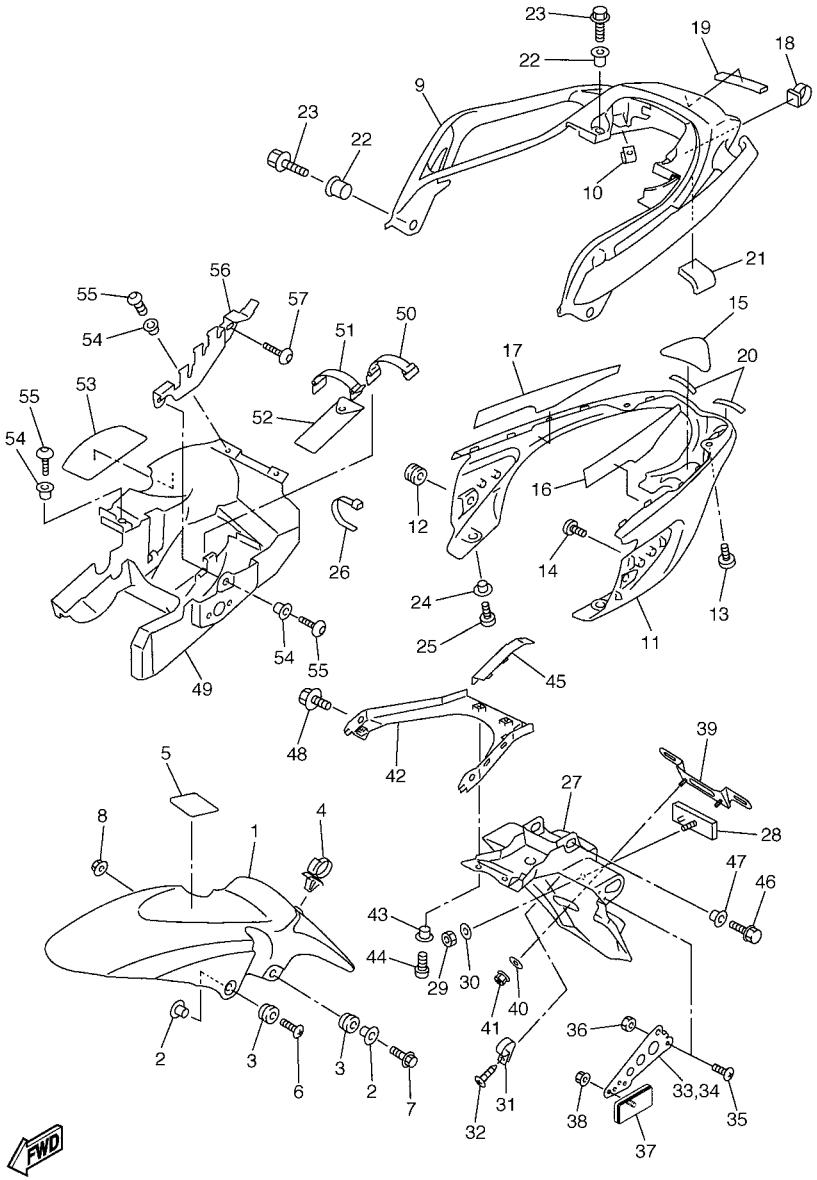

5VX3100-C210

FIG. 21 FENDER

REF. NO.	PART NO.	DESCRIPTION	5VX8	5VX9	5VXA			REMARKS
26	90465–13152	CLAMP	2	2	2			
27	5VX–21621–10	FLAP	1	1	1			
28	3Y6–85130–02	REAR REFLECTOR ASSY	1	1	1			
29	95607–05100	NUT, U	1	1	1			
30	90201–05725	WASHER, PLATE	1	1	1			
31	90464–18029	CLAMP	1	1	1			
32	97707–40012	SCREW, TAPPING	1	1	1			
33	5VX–2164H–00	STAY 3	1	1	1			(LH)
34	5VX–2164J–00	STAY 4	1	1	1			(RH)
35	90150–04041	SCREW, ROUND HEAD	4	4	4			
36	95607–04100	NUT, U	4	4	4			
37	3Y6–85130–02	REAR REFLECTOR ASSY	2	2	2			
38	95707–05500	NUT, FLANGE	2	2	2			
39	5MT–84751–00	BRACKET, LICENSE	1	1	1			
40	90201–06057	WASHER, PLATE	2	2	2			
41	95607–06100	NUT, U	2	2	2			
42	5VX–2161G–00	BRACKET 6	1	1	1			
43	90387–064J1	COLLAR	2	2	2			
44	92017–06012	BOLT, BUTTON HEAD	2	2	2			
45	5VX–21665–00	GUIDE, MUD GUARD	1	1	1			
46	90119–06044	BOLT, WITH WASHER	2	2	2			
47	90387–06075	COLLAR	2	2	2			
48	95827–08012	BOLT, FLANGE	2	2	2			
49	5VX–21629–00	GUARD, MUD	1	1	1			
50	3TJ–82131–00	BAND, BATTERY	1	1	1			
51	122–82131–00	BAND, BATTERY	1	1	1			
52	5VX–28100–00	TOOL KIT	1	1	1			

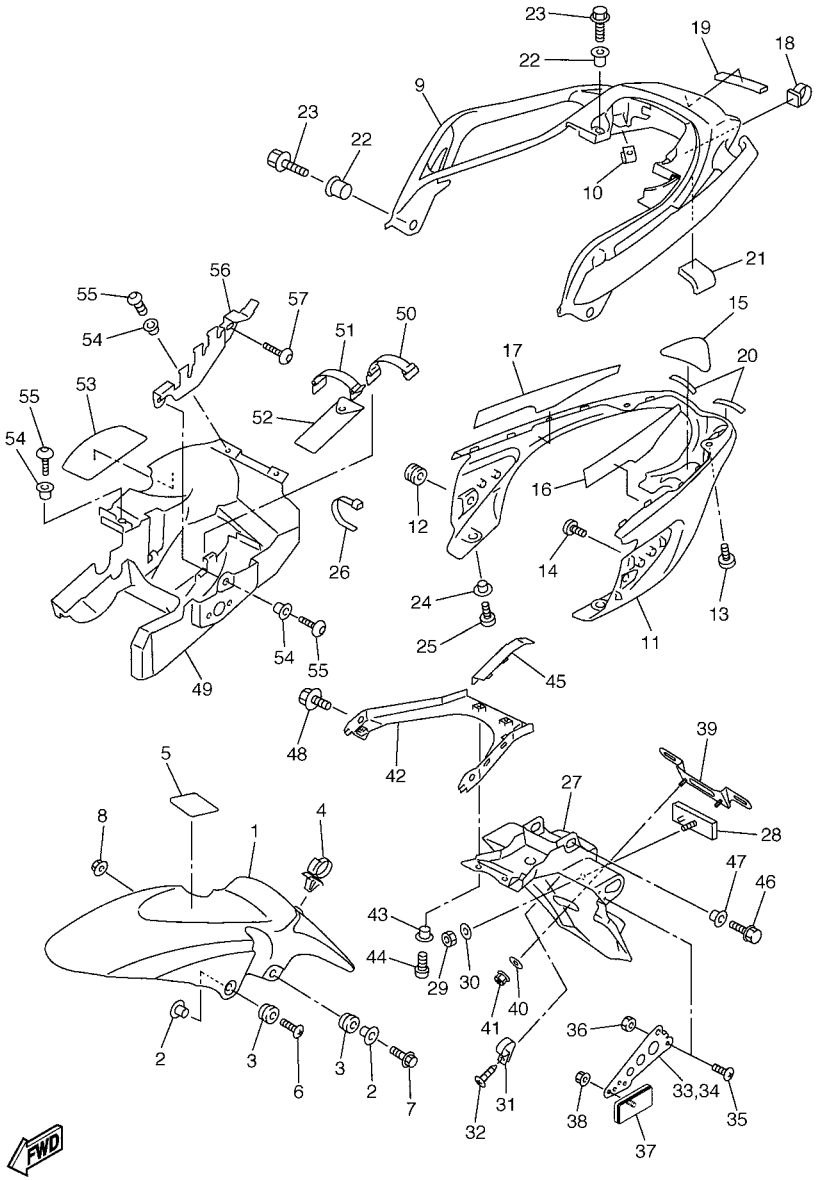

5VX3100-C210

FIG. 21 FENDER

REF. NO.	PART NO.	DESCRIPTION	5VX8	5VX9	5VXA			REMARKS
53	5VX–2173N–00	SEAL 4	1	1	1			
54	90387–064J1	COLLAR	4	4	4			
55	92017–06016	BOLT, BUTTON HEAD	4	4	4			
56	5VX–2164F–00	STAY 1	1	1	1			
57	92017–06016	BOLT, BUTTON HEAD	1	1	1			

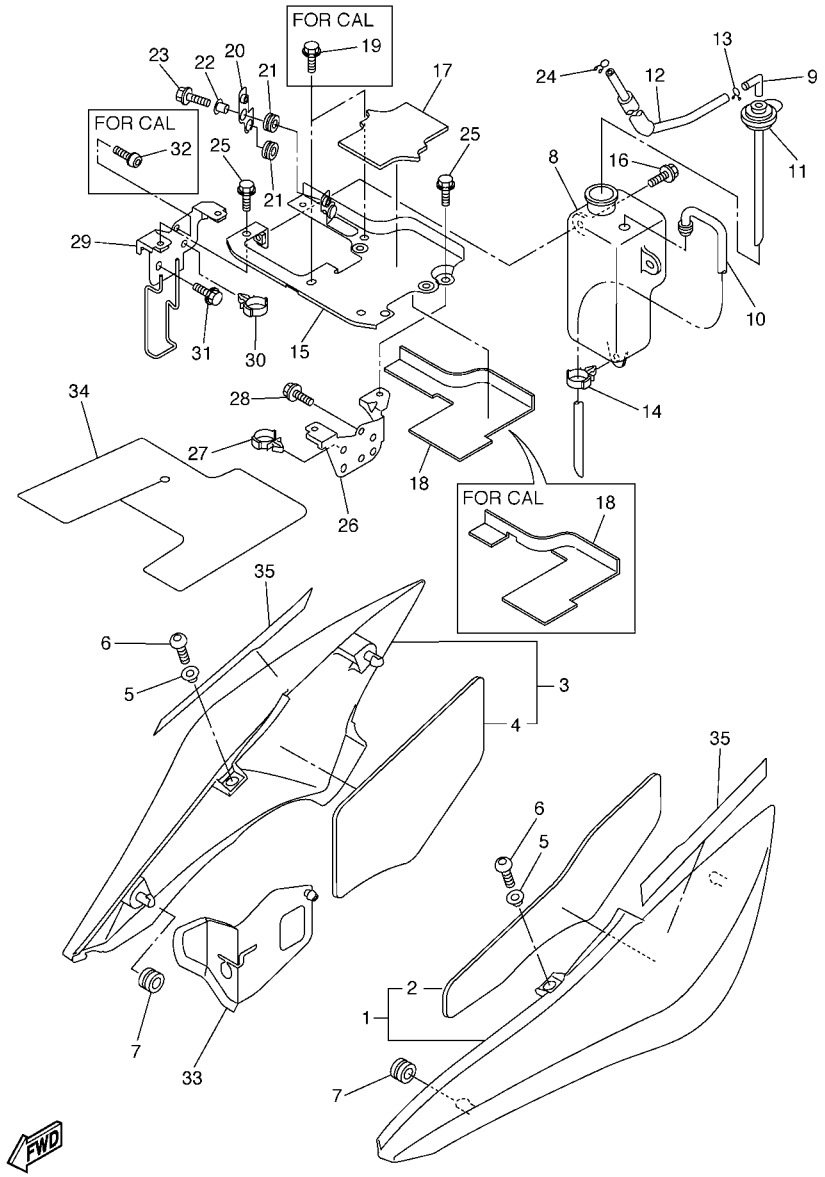

FIG. 22 SIDE COVER

REF. NO.	PART NO.	DESCRIPTION	5VX8	5VX9	5VXA			REMARKS
1	5VX–21710–00	SIDE COVER ASSY 1	1	1	1			UR FOR DPBML
	5VX–21710–10	SIDE COVER ASSY 1	1	1	1			UR FOR BS4
2	5VX–2174X–00	.DAMPER	1	1	1			
3	5VX–21720–00	SIDE COVER ASSY 2	1	1	1			UR FOR DPBML
	5VX–21720–10	SIDE COVER ASSY 2	1	1	1			UR FOR BS4
4	5VX–2174Y–00	.DAMPER	1	1	1			
5	90387–064J1	COLLAR	2	2	2			
6	92017–06014	BOLT, BUTTON HEAD	2	2	2			
7	90480–01558	GROMMET	2	2	2			
8	5VX–21871–00	TANK, RECOVERY	1	1	1			
9	26H–21828–00	ELBOW	1	1	1			
10	5VX–21816–00	PIPE 1	1	1	1			
11	5VX–21875–00	CAP	1	1	1			
12	90445–08018	HOSE	1	1	1			
13	90467–08075	CLIP	1	1	1			
14	90464–20181	CLAMP	1	1	1			
15	5VX–21873–00	BRACKET, RECOVERY TANK	1	1	1			
16	90119–06117	BOLT, WITH WASHER	2	2	2			
17	5VX–21779–00	DAMPER, LOCATING 2	1	1	1			
18	5VX–2173M–00	SEAL 3	1		1			
	5VX–2173M–10	SEAL 3		1				
19	95027–06012	BOLT, FLANGE		2				
20	5VX–21228–00	BRACKET, RESERVE TANK	1	1	1			
21	90480–13163	GROMMET	2	2	2			
22	90560–06201	SPACER	1	1	1			
23	95807–06016	BOLT, FLANGE	1	1	1			
24	90467–08075	CLIP	1	1	1			

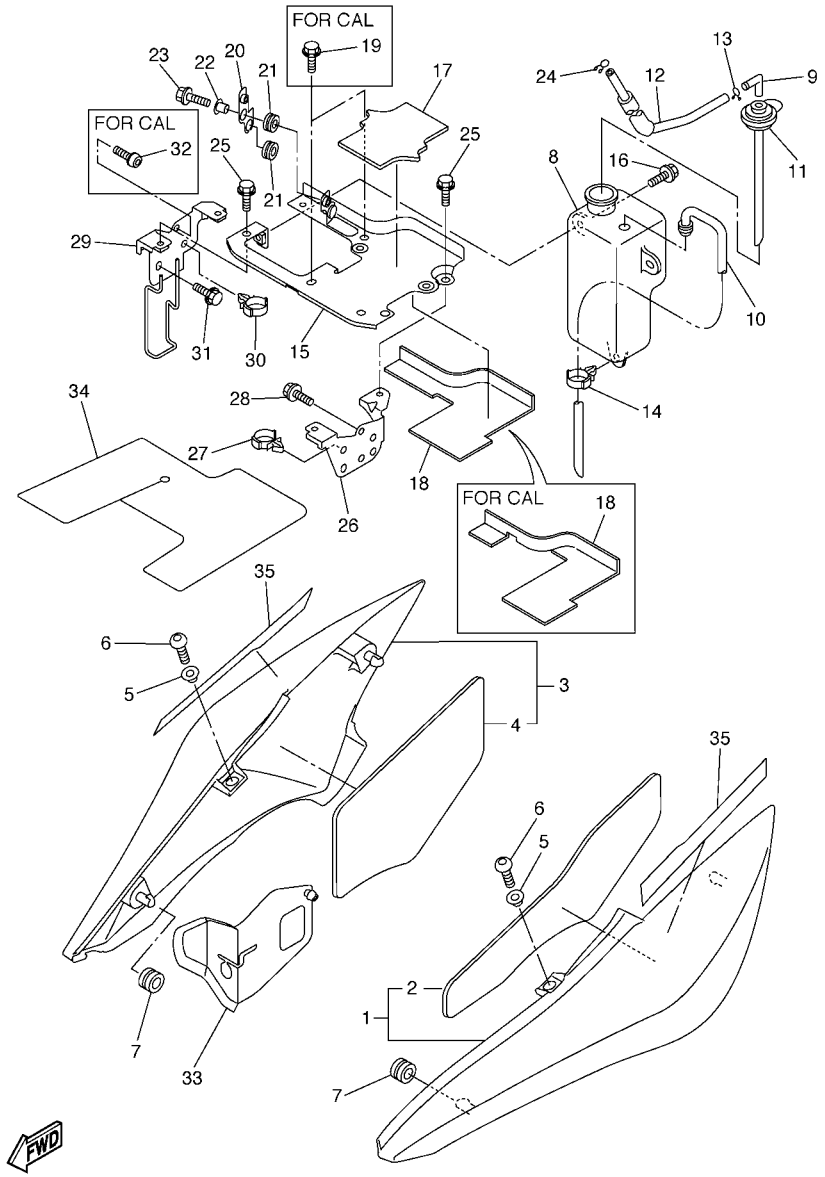

5VX3100-C220

FIG. 22 SIDE COVER

REF. NO.	PART NO.	DESCRIPTION	5VX8	5VX9	5VXA			REMARKS
25	95827–06010	BOLT, FLANGE	4	4	4			
26	5VX–21843–00	STAY, 4	1	1	1			
27	90464–20181	CLAMP	1		1			
28	95827–06010	BOLT, FLANGE	2	2	2			
29	5VX–22836–00	STAY, 3	1	1	1			
30	90464–16006	CLAMP	1	1	1			
31	95827–06010	BOLT, FLANGE	2	1	2			
32	92017–06012	BOLT, BUTTON HEAD		1				
33	5VX–2163A–00	COVER, REAR FENDER 1	1	1	1			
34	5VX–2177F–00	FLAP	1	1	1			
35	5VX–21781–11	EMBLEM 1	2	2	2			UR FOR DPBML
	5VX–21781–30	EMBLEM 1	2	2	2			UR FOR BS4

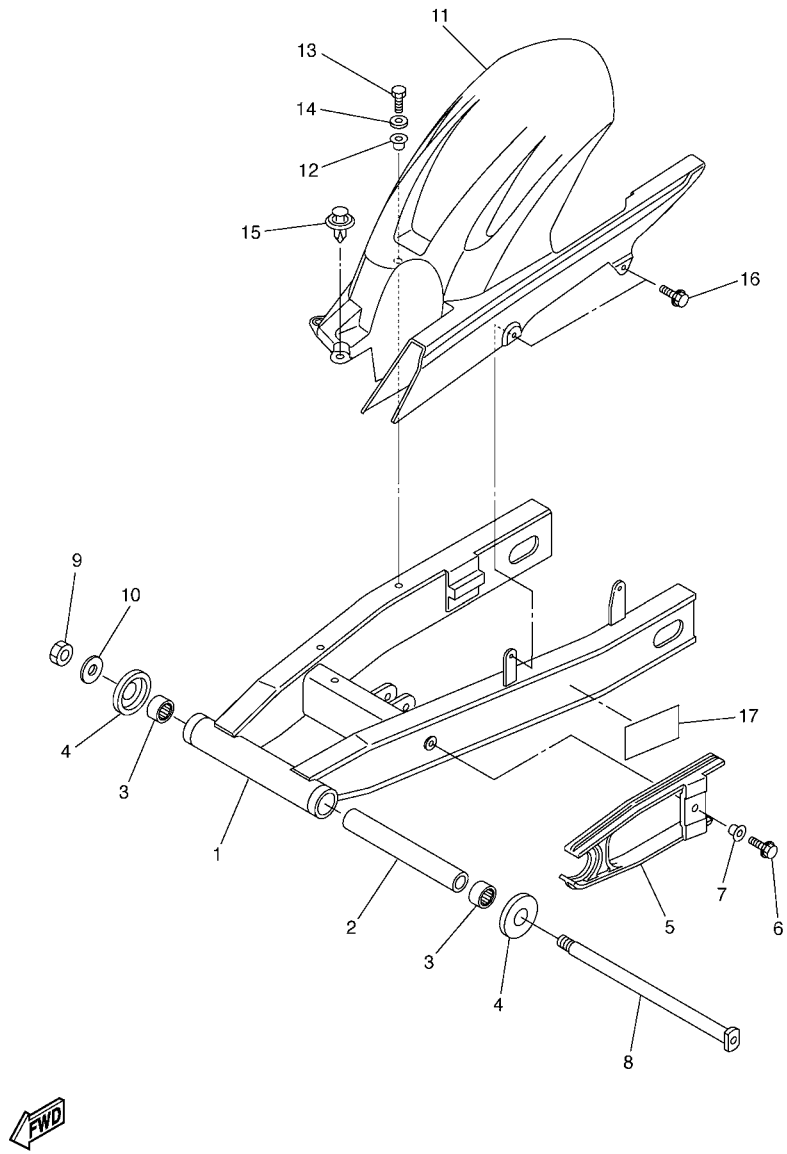

5VX3100-C230

FIG. 23 REAR ARM

REF. NO.	PART NO.	DESCRIPTION	5VX8	5VX9	5VXA			REMARKS
1	5VX–22110–10	REAR ARM COMP.	1	1	1			
2	5EB–22184–00	BUSH	1	1	1			
3	93315–42523	BEARING	2	2	2			
4	5JJ–22128–00	COVER, THRUST 1	2	2	2			
5	5VX–22151–00	SEAL, GUARD	1	1	1			
6	90119–06096	BOLT, WITH WASHER	1	1	1			
7	90387–06372	COLLAR	1	1	1			
8	4FN–22141–00	SHAFT, PIVOT	1	1	1			
9	90185–18104	NUT, SELF-LOCKING	1	1	1			
10	90201–186M4	WASHER, PLATE	1	1	1			
11	5VX–21650–00	REAR FENDER COMP.	1	1	1			
12	90387–064J1	COLLAR	2	2	2			
13	97007–06025	BOLT	2	2	2			
14	92907–06600	WASHER, PLATE	2	2	2			
15	90269–08001	RIVET	1	1	1			
16	90119–06117	BOLT, WITH WASHER	2	2	2			
17	5VX–2179V–10	PLATE, EPA 1(NON CALIFORNIA)	1					
	5VX–2179R–10	PLATE, EPA 2 (CALIFORNIA)		1				

FIG. 24 REAR SUSPENSION

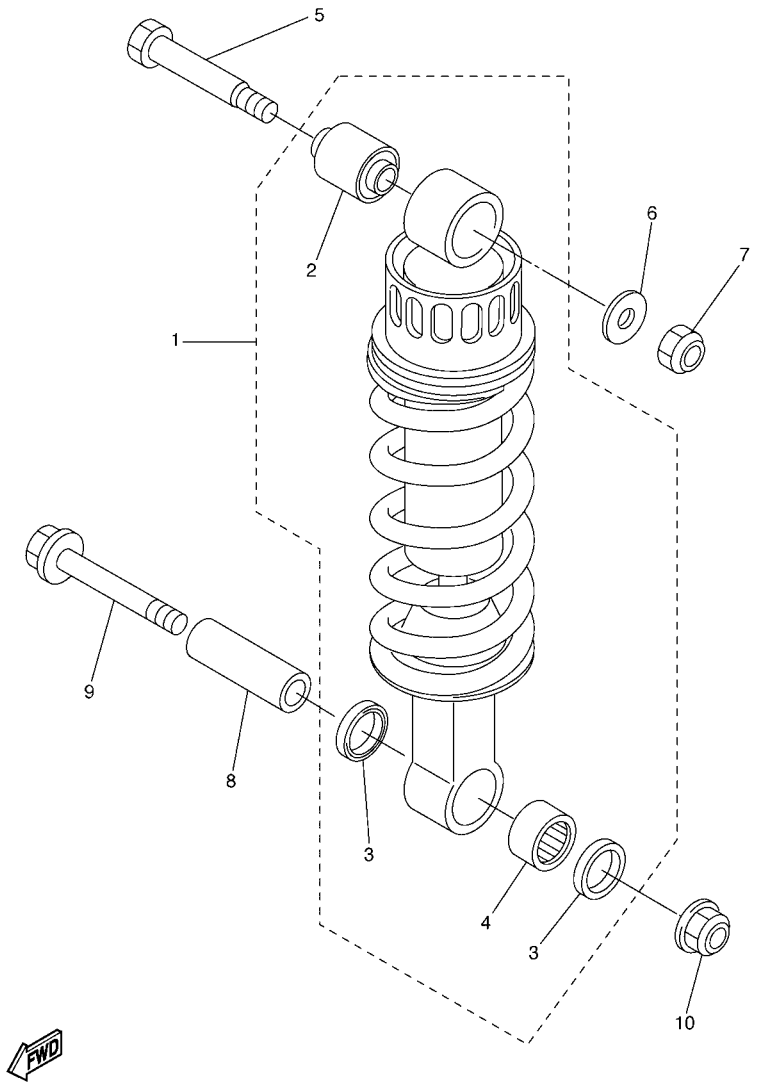

5VX1351-C240

REF. NO.	PART NO.	DESCRIPTION	5VX8	5VX9	5VXA			REMARKS
1	5VX–22210–10	SHOCK ABSORBER ASSY, REAR	1	1				
	5VX–22210–20	SHOCK ABSORBER ASSY, REAR			1			
2	34L–22216–00	.BUSH, REAR SHOCK ABSORBER	1	1	1			
3	93109–17071	.OIL SEAL	2	2	2			
4	93315–31758	.BEARING	1	1	1			
5	90109–10654	BOLT	1	1	1			
6	90201–101J1	WASHER, PLATE	1	1	1			
7	95607–10100	NUT, U	1	1	1			
8	90387–1012B	COLLAR	1	1	1			
9	90105–10323	BOLT, FLANGE	1	1	1			
10	95607–10200	NUT, U FLANGE	1	1	1			

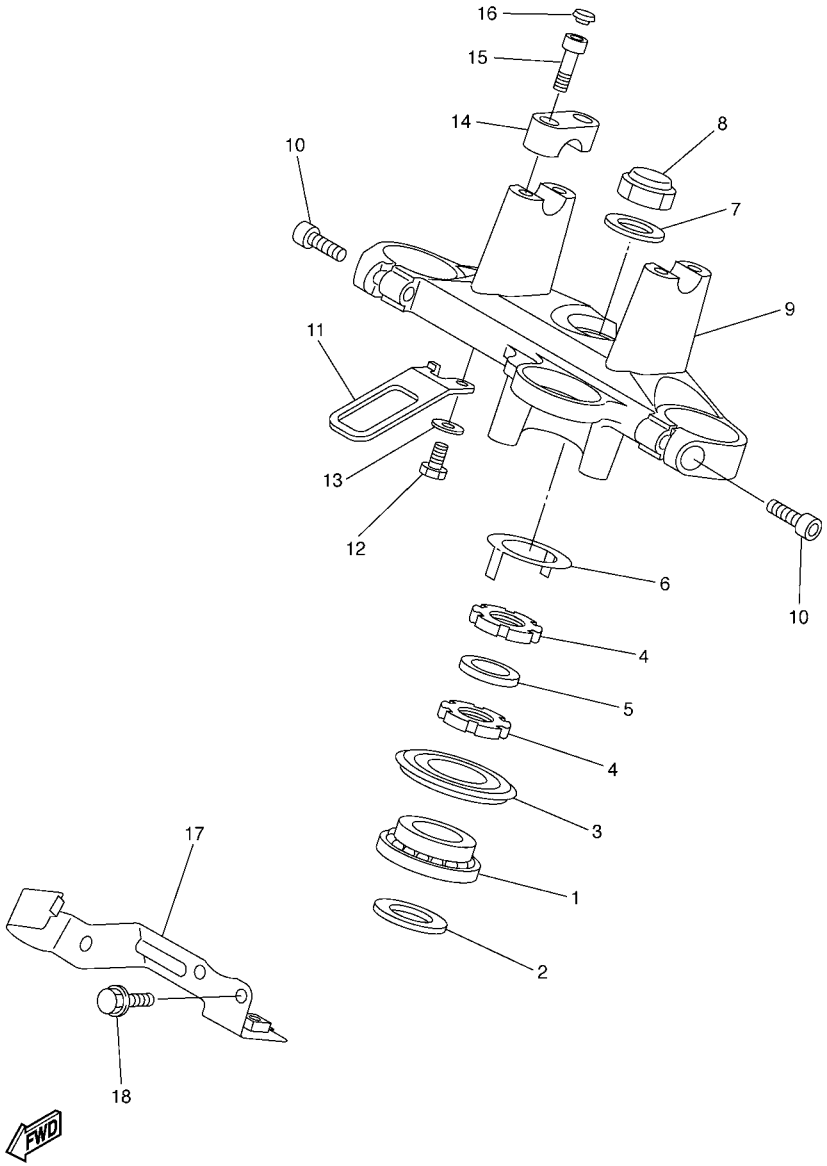

5VX1351-C250

FIG. 25 STEERING

REF. NO.	PART NO.	DESCRIPTION	5VX8	5VX9	5VXA			REMARKS
1	93399–99931	BEARING	1	1	1			
2	90202–24190	WASHER, PLATE	1	1	1			
3	5VX–23415–00	COVER, BALL RACE 1	1	1	1			
4	90179–25033	NUT	2	2	2			
5	90202–26142	WASHER, PLATE	1	1	1			
6	26H–23418–01	WASHER, SPECIAL	1	1	1			
7	90201–220T0	WASHER, PLATE	1	1	1			
8	90176–22081	NUT, CROWN	1	1	1			
9	5VX–23435–10	CROWN, HANDLE	1	1	1			
10	91314–08030	BOLT	2	2	2			
11	5VX–23389–00	GUIDE, CABLE	1	1	1			
12	97007–06016	BOLT	1	1	1			
13	92907–06600	WASHER, PLATE	1	1	1			
14	4H7–23441–01–35	HOLDER, HANDLE UPPER	2	2	2			SL
15	91317–08030	BOLT	4	4	4			
16	90338–06004	PLUG	4	4	4			
17	5VX–23377–00	BRACKET, HORN	1	1	1			
18	95807–06012	BOLT, FLANGE	2	2	2			

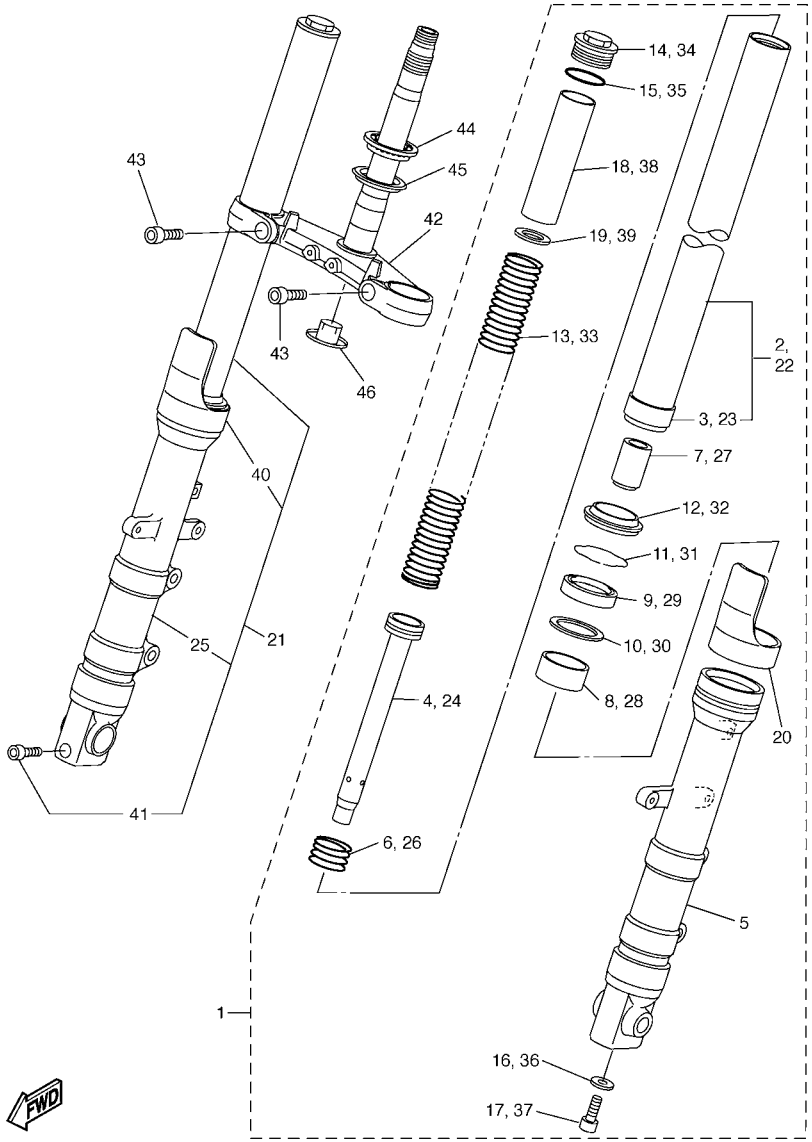

5VX1351-C260

FIG. 26 FRONT FORK

REF. NO.	PART NO.	DESCRIPTION	5VX8	5VX9	5VXA			REMARKS
1	5VX–23102–00	FRONT FORK ASSY (L.H)	1	1	1			
2	5VX–23110–00	.INNER TUBE COMP.1	1	1	1			
3	4TX–23135–A0	..METAL, SLIDE 2	1	1	1			
4	5VX–23170–00	.CYLINDER COMP., FRONT FORK	1	1	1			
5	5VX–23126–00	.TUBE, OUTER (LEFT)	1	1	1			
6	4TX–23151–00	.SPRING, REBOUND	1	1	1			
7	4TX–23173–00	.SPINDLE, TAPER	1	1	1			
8	4TX–23125–A0	.METAL, SLIDE 1	1	1	1			
9	5VX–23145–00	.OIL SEAL	1	1	1			
10	4TX–23115–00	.GUIDE, COVER UPPER	1	1	1			
11	4TX–23156–00	.CLIP, OIL SEAL	1	1	1			
12	4TX–23144–00	.SEAL, DUST	1	1	1			
13	5VX–23141–00	.SPRING, FRONT FORK	1	1	1			
14	5VX–2311H–00	.FORK, BOLT	1	1	1			
15	93210–34504	.O-RING	1	1	1			
16	90430–10171	.GASKET	1	1	1			
17	90110–10N52	.BOLT, HEXAGON SOCKET HEAD	1	1	1			
18	5VX–23118–00	.SPACER	1	1	1			
19	90201–231E1	.WASHER, PLATE	1	1	1			
20	4TX–2331G–00	.COVER	1	1	1			
21	5VX–23103–00	FRONT FORK ASSY (R.H)	1	1	1			
22	5VX–23110–00	.INNER TUBE COMP.1	1	1	1			
23	4TX–23135–A0	..METAL, SLIDE 2	1	1	1			
24	5VX–23170–00	.CYLINDER COMP., FRONT FORK	1	1	1			
25	5VX–23136–00	.TUBE, OUTER (RIGHT)	1	1	1			
26	4TX–23151–00	.SPRING, REBOUND	1	1	1			
27	4TX–23173–00	.SPINDLE, TAPER	1	1	1			

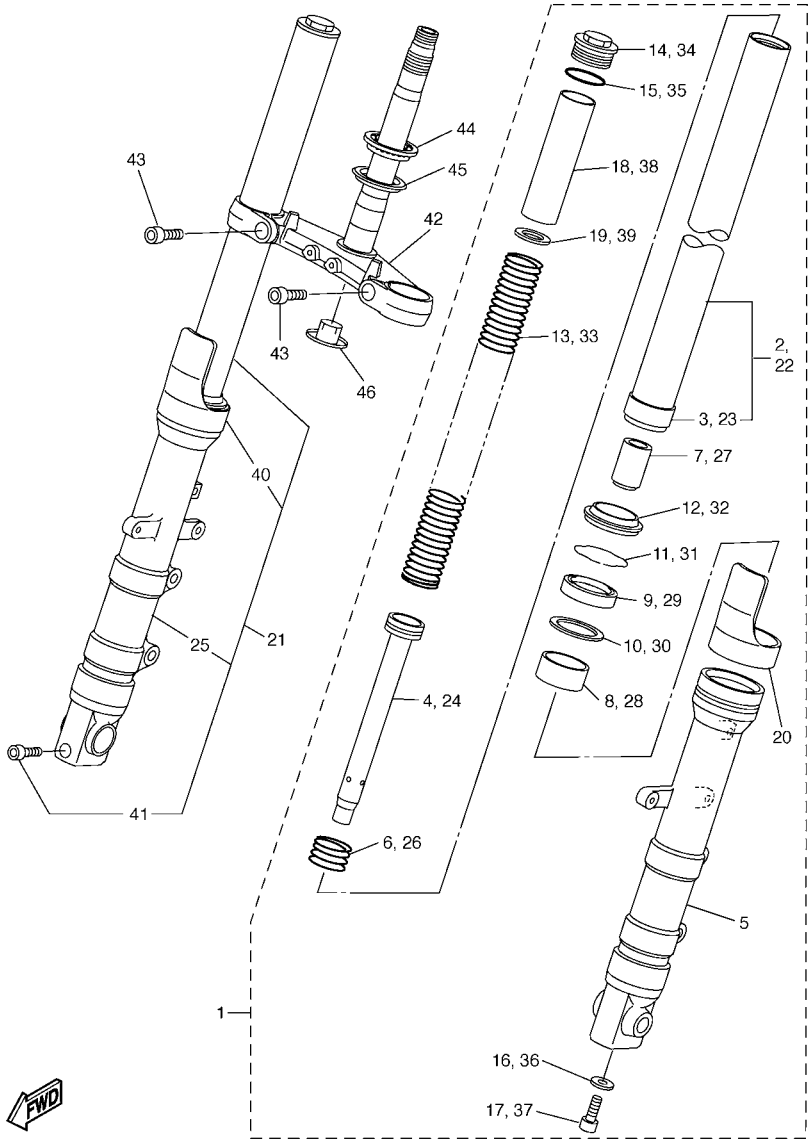

5VX1351-C260

FIG. 26 FRONT FORK

REF. NO.	PART NO.	DESCRIPTION	5VX8	5VX9	5VXA			REMARKS
28	4TX–23125–A0	.METAL, SLIDE 1	1	1	1			
29	5VX–23145–00	.OIL SEAL	1	1	1			
30	4TX–23115–00	.GUIDE, COVER UPPER	1	1	1			
31	4TX–23156–00	.CLIP, OIL SEAL	1	1	1			
32	4TX–23144–00	.SEAL, DUST	1	1	1			
33	5VX–23141–00	.SPRING, FRONT FORK	1	1	1			
34	5VX–2311H–00	.FORK, BOLT	1	1	1			
35	93210–34504	.O-RING	1	1	1			
36	90430–10171	.GASKET	1	1	1			
37	90110–10N52	.BOLT, HEXAGON SOCKET HEAD	1	1	1			
38	5VX–23118–00	.SPACER	1	1	1			
39	90201–231E1	.WASHER, PLATE	1	1	1			
40	4TX–2331G–00	.COVER	1	1	1			
41	91314–08045	.BOLT	1	1	1			
42	5VX–23340–00	UNDER BRACKET COMP.	1	1	1			
43	91317–10025	BOLT	2	2	2			
44	93399–99932	BEARING	1	1	1			
45	3FV–23462–00	SEAL, STEERING	1	1	1			
46	4KM–23123–01	COVER, LOWER 1	1	1	1			

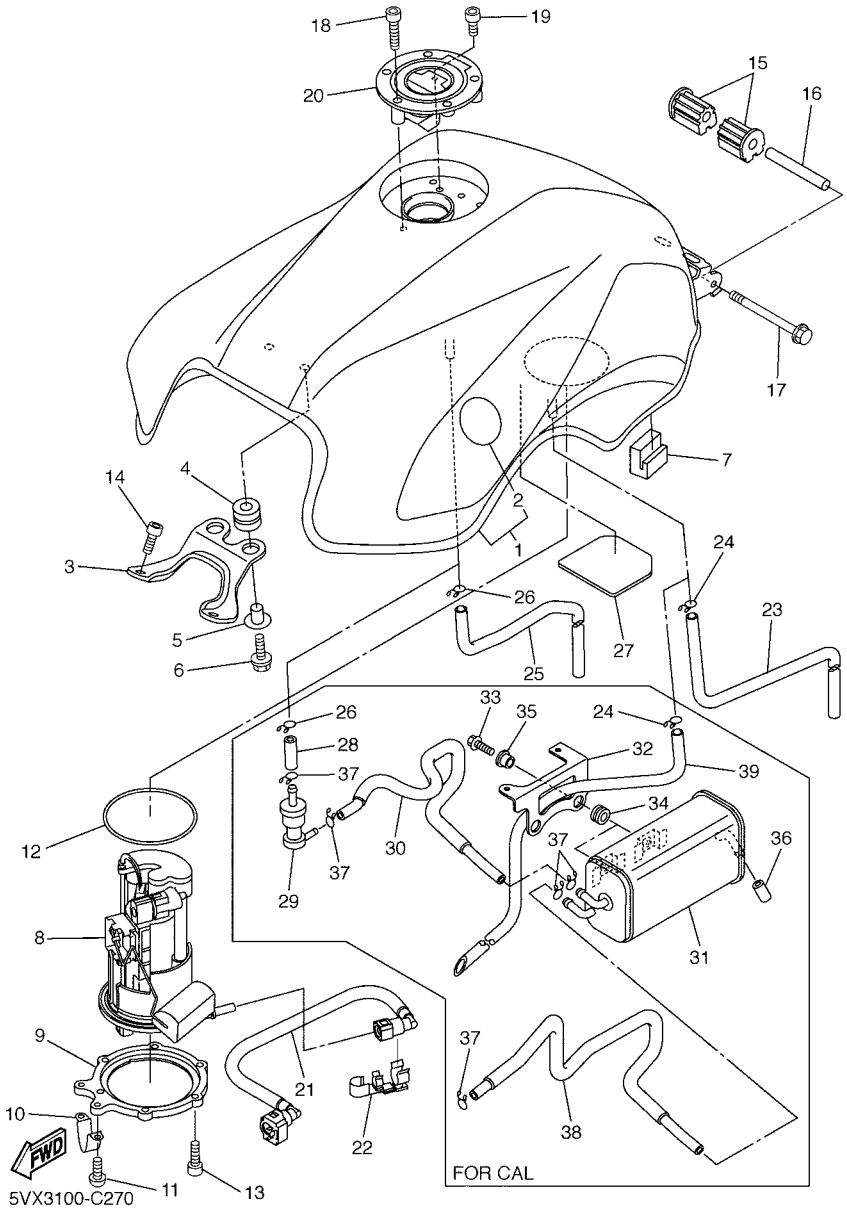

FIG. 27 FUEL TANK

REF. NO.	PART NO.	DESCRIPTION	5VX8	5VX9	5VXA			REMARKS
1	5VX–Y2410–30–02	FUEL TANK COMP.	1	1	1			UR DPBML
	5VX–Y2410–30–07	FUEL TANK COMP.	1	1	1			UR BS4
2	5VX–2411B–00	.TUNING FORK MARK	2	2	2			
3	5VX–24191–00	BRACKET, FUEL TANK 1	1	1	1			
4	90480–15005	GROMMET	2	2	2			
5	90387–06068	COLLAR	2	2	2			
6	90119–06062	BOLT, WITH WASHER	2	2	2			
7	5VX–24183–00	DAMPER, LOCATING 3	2	2	2			
8	5VX–13907–01	FUEL PUMP COMP.	1	1	1			
9	5SL–24491–00	BRACKET, FUEL PUMP	1	1	1			
10	5PW–24192–00	BRACKET, FUEL TANK 2	1	1	1			
11	98907–05008	SCREW, BIND	2	2	2			
12	5JW–24486–00	O-RING	1	1	1			
13	90110–05014	BOLT, HEXAGON SOCKET HEAD	6	6	6			
14	90110–06079	BOLT, HEXAGON SOCKET HEAD	2	2	2			
15	5VX–24181–00	DAMPER, LOCATING 1	2	2	2			
16	90387–061W6	COLLAR	1	1	1			
17	95827–06090	BOLT, FLANGE	1	1	1			
18	90110–05112	BOLT, HEXAGON SOCKET HEAD	3	3	3			
19	91317–05010	BOLT	1	1	1			
20	5JJ–24602–00	CAP ASSY	1	1	1			
21	5VX–13971–00	PIPE, FUEL 1	1	1	1			
22	90464–16005	CLAMP	1	1	1			
23	90445–10033	HOSE	1		1			
24	90467–10008	CLIP	1	1	1			
25	90445–10032	HOSE	1		1			
26	90467–10008	CLIP	1	1	1			

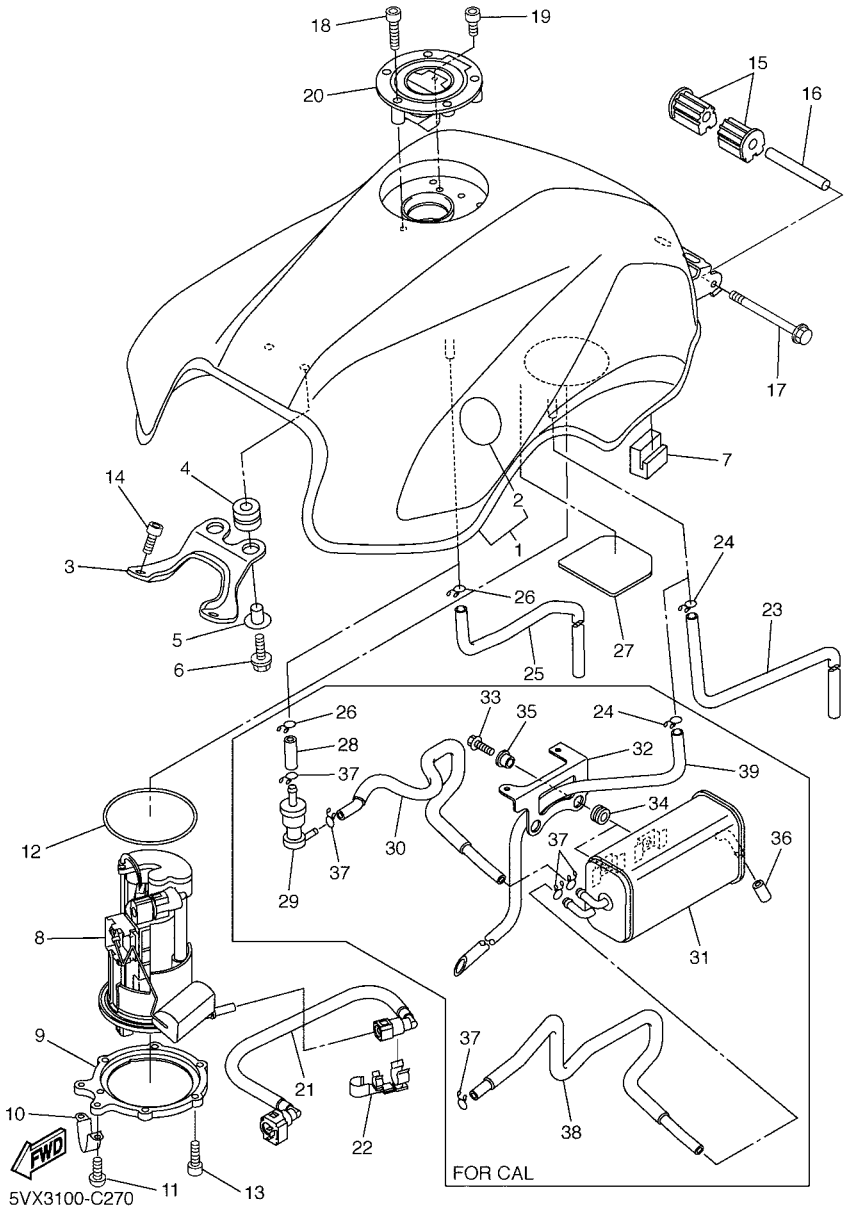

FIG. 27 FUEL TANK

REF. NO.	PART NO.	DESCRIPTION	5VX8	5VX9	5VXA			REMARKS
27	5VX–24141–00	PROTECTOR, FUEL TANK	1	1	1			
28	90445–11732	HOSE (L30)		1				
29	5RB–24180–00	ROLL OVER VALVE ASSY		1				
30	5VX–24314–00	PIPE 4		1				
31	5VX–24170–00	CANISTER ASSY		1				
32	5VX–2419F–00	BRACKET, CANISTOR		1				
33	95807–06016	BOLT, FLANGE		2				
34	90480–13163	GROMMET		2				
35	90387–062L2	COLLAR		2				
36	90445–11418	HOSE (L18)		1				
37	90467–10008	CLIP		5				
38	5VX–14466–00	PIPE		1				
39	90445–10034	HOSE		1				

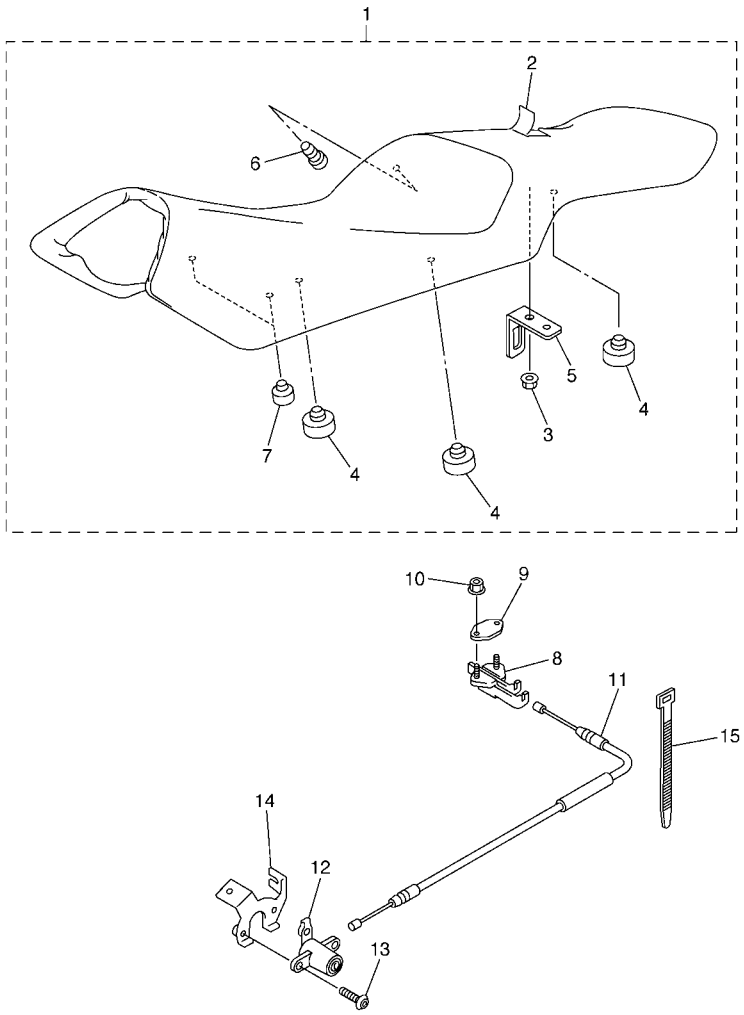

5VX1351-C280

FIG. 28 SEAT

REF. NO.	PART NO.	DESCRIPTION	5VX8	5VX9	5VXA			REMARKS
1	5VX–24730–01	DOUBLE SEAT ASSY	1	1	1			
2	5VX–24711–00	.COVER, SINGLE SEAT	1	1	1			
3	95707–06500	.NUT, FLANGE	1	1	1			
4	371–27114–00	.STOPPER, MAIN STAND	6	6	6			
5	4NK–24728–00	.BRACKET, SEAT	1	1	1			
6	90338–06018	.PLUG	1	1	1			
7	5VX–24724–00	.DAMPER, SEAT	2	2	2			
8	4BP–24780–00	SEAT LOCK ASSY	1	1	1			
9	4BP–24792–00	PLATE	1	1	1			
10	95707–06500	NUT, FLANGE	2	2	2			
11	5VX–2478E–00	CABLE, SEAT LOCK	1	1	1			
12	2TV–W2470–00	SEAT LOCK ASSY	1	1	1			
13	90149–06308	SCREW	2	2	2			
14	5PW–2117K–00	STAY, LOCK	1	1	1			
15	90464–16061	CLAMP	1	1	1			

FIG. 29 FRONT WHEEL

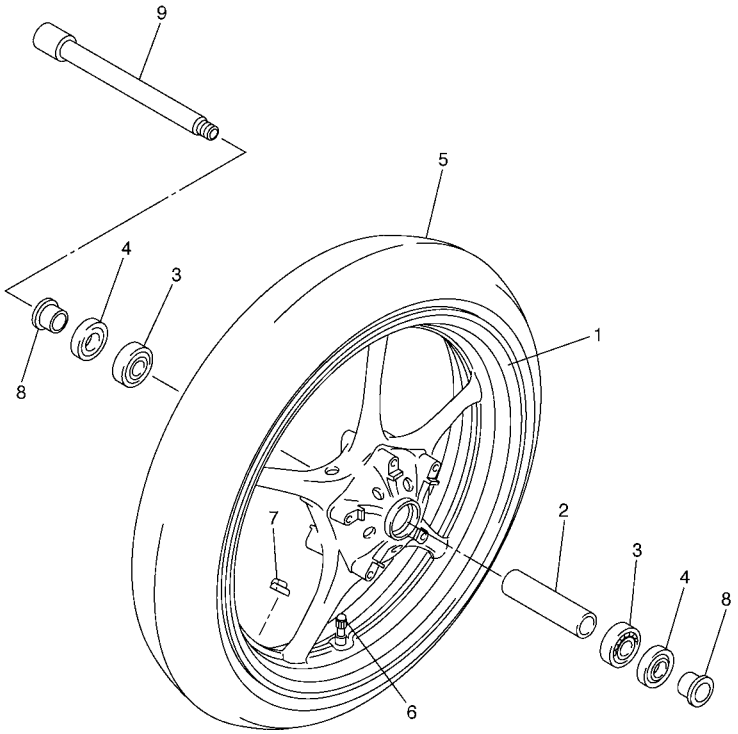

5VX1351-C290

REF. NO.	PART NO.	DESCRIPTION	5VX8	5VX9	5VXA			REMARKS
1	5SL–25168–00–35	CAST WHEEL, FRONT	1	1	1			UR SL FOR DPBML
	5SL–25168–00–98	CAST WHEEL, FRONT	1	1	1			UR LGB FOR BS4
2	4XV–25117–00	SPACER, BEARING	1	1	1			
3	93306–00420	BEARING (B6004)	2	2	2			
4	93106–28043	OIL SEAL	2	2	2			
5	94112–17066	TIRE(120/70ZR17M/C 58W BT020F)	1	1	1			UR BRIDGESTONE
	94112–17067	TIRE(120/70ZR17M/C 58W D252F)	1	1	1			UR DUNLOP
6	93900–00030	VALVE, RIM (TR412)	1	1	1			TAIHEIYO
7	5MT–25398–00	BALANCER, WHEEL (10G)	1	1	1			UR
	5MT–25398–10	BALANCER, WHEEL (20G)	1	1	1			UR
	5MT–25398–20	BALANCER, WHEEL (30G)	1	1	1			UR
8	90387–22002	COLLAR	2	2	2			
9	4XV–25181–00	AXLE, WHEEL	1	1	1			

FIG. 30 FRONT BRAKE CALIPER

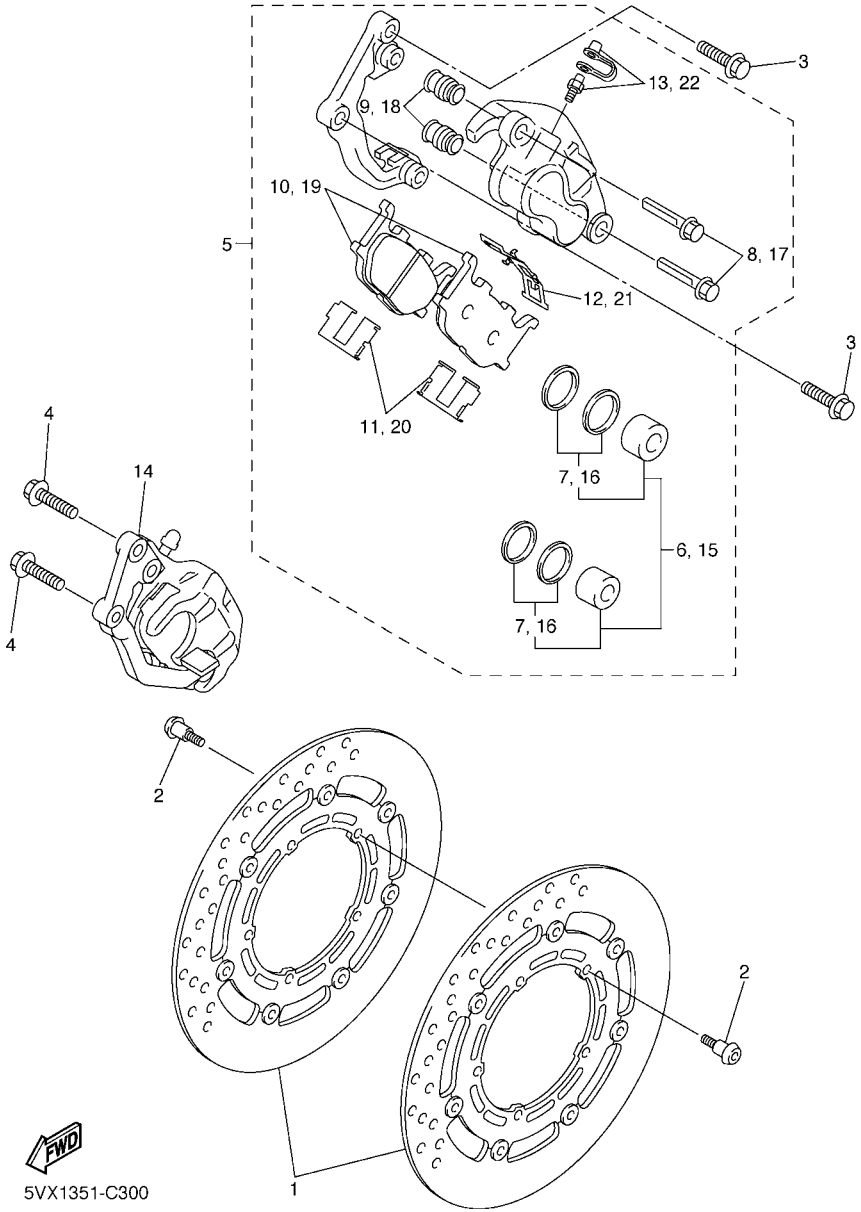

REF. NO.	PART NO.	DESCRIPTION	5VX8	5VX9	5VXA			REMARKS
1	5VX–2581T–00	DISK BRAKE ASSY	2	2	2			
2	90109–064G6	BOLT	10	10	10			
3	90105–10638	BOLT, FLANGE	2	2	2			
4	90105–10638	BOLT, FLANGE	2	2	2			
5	5VX–2580T–00	CALIPER ASSY (LEFT)	1	1	1			
6	5KS–W0057–00	.PISTON ASSY, CALIPER	1	1	1			
7	4FU–W0047–00	..CALIPER SEAL KIT	1	1	1			
8	5JW–25914–10	.PIN, SLIDE	2	2	2			
9	4TT–25937–00	.BOOT 2	2	2	2			
10	5VX–W0045–00	.BRAKE PAD KIT	1	1	1			
11	4BP–25919–00	.SUPPORT, PAD	2	2	2			
12	3YX–25929–00	.SPRING, ANTI RATTLE	1	1	1			
13	51L–W0048–00	.BLEED SCREW KIT	1	1	1			
14	5VX–2580U–00	CALIPER ASSY (RIGHT)	1	1	1			
15	5KS–W0057–00	.PISTON ASSY, CALIPER	1	1	1			
16	4FU–W0047–00	..CALIPER SEAL KIT	1	1	1			
17	5JW–25914–10	.PIN, SLIDE	2	2	2			
18	4TT–25937–00	.BOOT 2	2	2	2			
19	5VX–W0045–00	.BRAKE PAD KIT	1	1	1			
20	4BP–25919–00	.SUPPORT, PAD	2	2	2			
21	3YX–25929–00	.SPRING, ANTI RATTLE	1	1	1			
22	51L–W0048–00	.BLEED SCREW KIT	1	1	1			

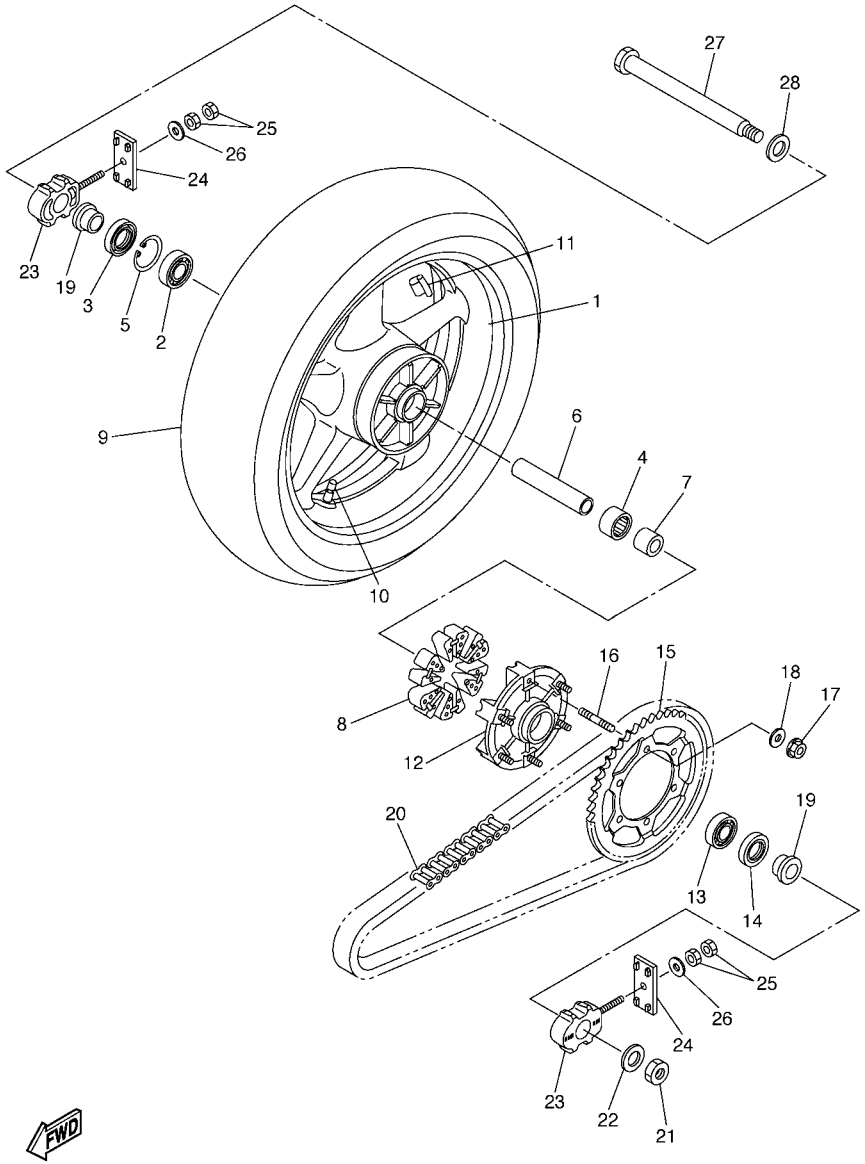

5VX3100-C310

FIG. 31 REAR WHEEL

REF. NO.	PART NO.	DESCRIPTION	5VX8	5VX9	5VXA			REMARKS
1	5SL–25338–00–35	CAST WHEEL, REAR	1	1	1			UR SL FOR DPBML
	5SL–25338–00–98	CAST WHEEL, REAR	1	1	1			UR LGB FOR BS4
2	93306–20531	BEARING	1	1	1			
3	93106–40013	OIL SEAL	1	1	1			
4	93317–43580	BEARING	1	1	1			
5	93420–61M07	CIRCLIP	1	1	1			
6	4XV–25317–00	SPACER, BEARING	1	1	1			
7	5SL–25383–00	COLLAR, WHEEL	1	1	1			
8	5VX–25364–00	DAMPER	6	6	6			
9	94118–17041	TIRE(180/55ZR17M/C 73W BT020R)	1	1	1			UR BRIDGESTONE
	94118–17053	TIRE(180/55ZR17M/C 73W D252)	1	1	1			UR DUNLOP
10	93900–00030	VALVE, RIM (TR412)	1	1	1			TAIHEIYO
11	5MT–25398–00	BALANCER, WHEEL (10G)	1	1	1			UR
	5MT–25398–10	BALANCER, WHEEL (20G)	1	1	1			UR
	5MT–25398–20	BALANCER, WHEEL (30G)	1	1	1			UR
12	5SL–25366–00	CLUTCH, HUB	1	1	1			
13	93306–20531	BEARING	1	1	1			
14	93106–40013	OIL SEAL	1	1	1			
15	5VX–25446–00	SPROCKET, DRIVEN (46T)	1	1	1			
16	90116–10485	BOLT, STUD	6	6	6			
17	90185–10009	NUT, SELF-LOCKING	6	6	6			
18	90201–10021	WASHER, PLATE	6	6	6			
19	90387–28001	COLLAR	2	2	2			
20	94582–11118	CHAIN (DID50V4-118LE)	1	1	1			
21	90185–24165	NUT, SELF-LOCKING	1	1	1			
22	90201–25015	WASHER, PLATE	1	1	1			
23	5VX–25388–01	PULLER, CHAIN 1	2	2	2			

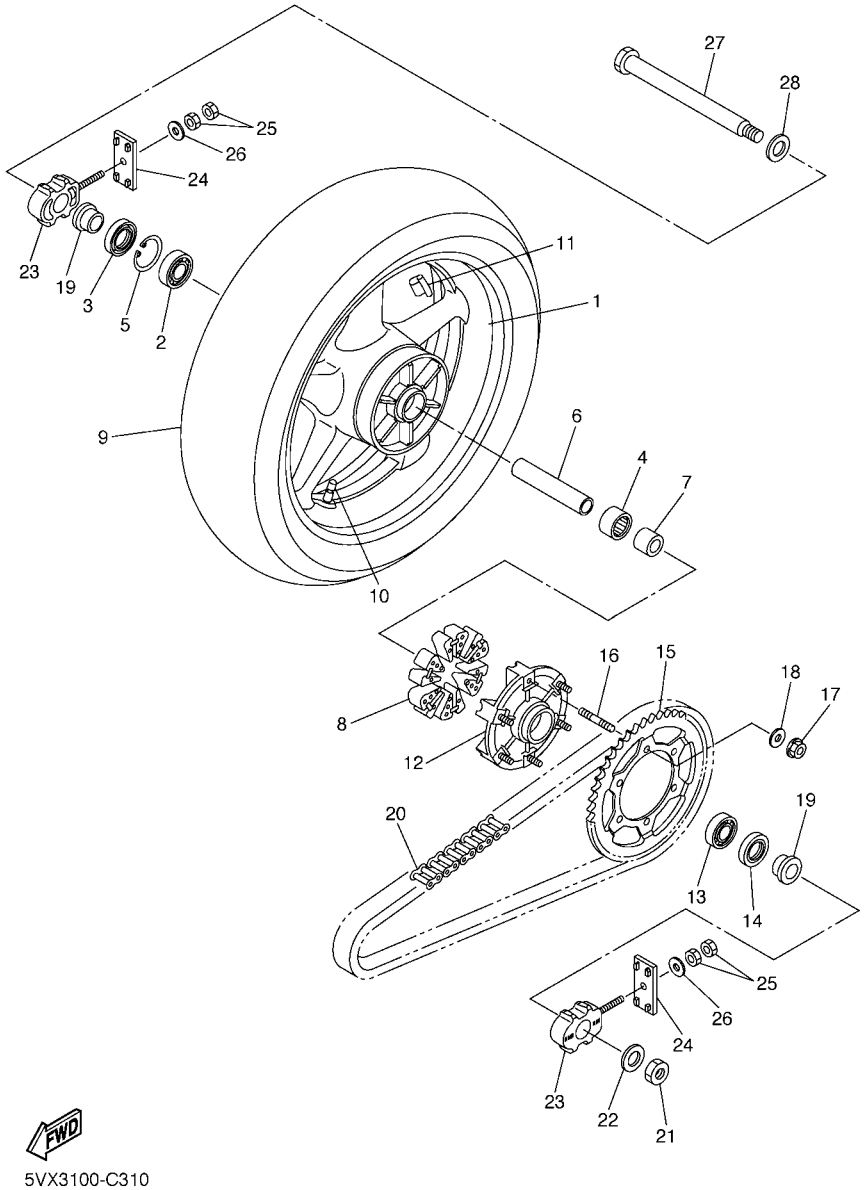

FIG. 31 REAR WHEEL

REF. NO.	PART NO.	DESCRIPTION	5VX8	5VX9	5VXA			REMARKS
24	2GH–25389–00	PULLER, CHAIN 2	2	2	2			
25	95307–08600	NUT	4	4	4			
26	92907–08200	WASHER	2	2	2			
27	5VX–25381–00	AXLE, WHEEL	1	1	1			
28	90201–28014	WASHER, PLATE	1	1	1			

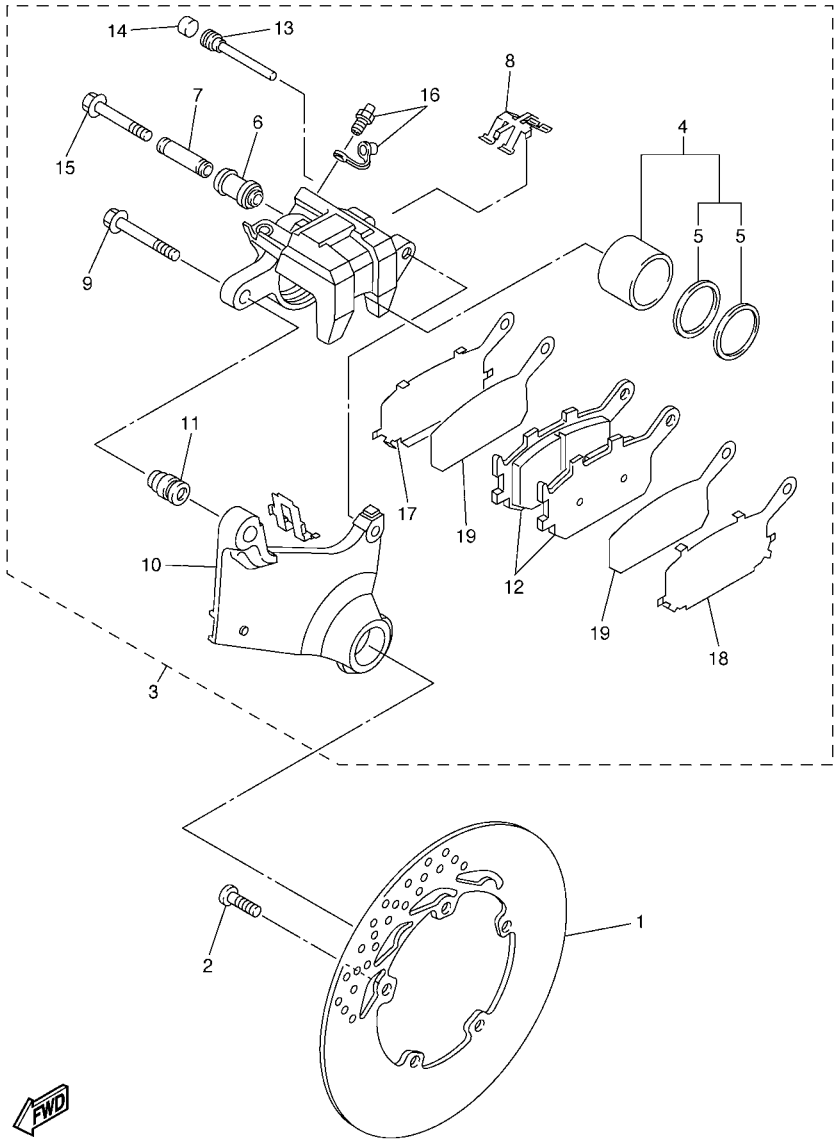

5VX1351-C320

FIG. 32 REAR BRAKE CALIPER

REF. NO.	PART NO.	DESCRIPTION	5VX8	5VX9	5VXA			REMARKS
1	5VX–2582W–00	DISK, REAR BRAKE 2	1	1	1			
2	90109–08045	BOLT	5	5	5			
3	5VX–2580W–00	CALIPER ASSY, REAR 2	1	1	1			
4	5SL–W0057–00	.PISTON ASSY, CALIPER	1	1	1			
5	5SL–W0047–00	..CALIPER SEAL KIT	1	1	1			
6	5SL–25917–00	.BOOT, CALIPER	1	1	1			
7	5SL–25838–00	.SLEEVE, CALIPER	1	1	1			
8	5SL–25919–00	.SUPPORT, PAD	1	1	1			
9	5SL–25914–00	.PIN, SLIDE	1	1	1			
10	5VX–25921–50	.BRACKET, SUPPORT	1	1	1			
11	3JD–25917–00	.BOOT, CALIPER	1	1	1			
12	5VX–W0046–00	.BRAKE PAD KIT 2	1	1	1			
13	8CR–25924–00	.PIN, PAD	1	1	1			
14	5DH–25916–00	.PLUG	1	1	1			
15	5SL–25926–00	.BOLT	1	1	1			
16	1UY–W0048–00	.BLEED SCREW KIT	1	1	1			
17	5SL–25827–00	.SHIM, CALIPER	1	1	1			
18	5SL–25827–10	.SHIM, CALIPER	1	1	1			
19	5SL–25828–00	.SHIM, CALIPER	2	2	2			

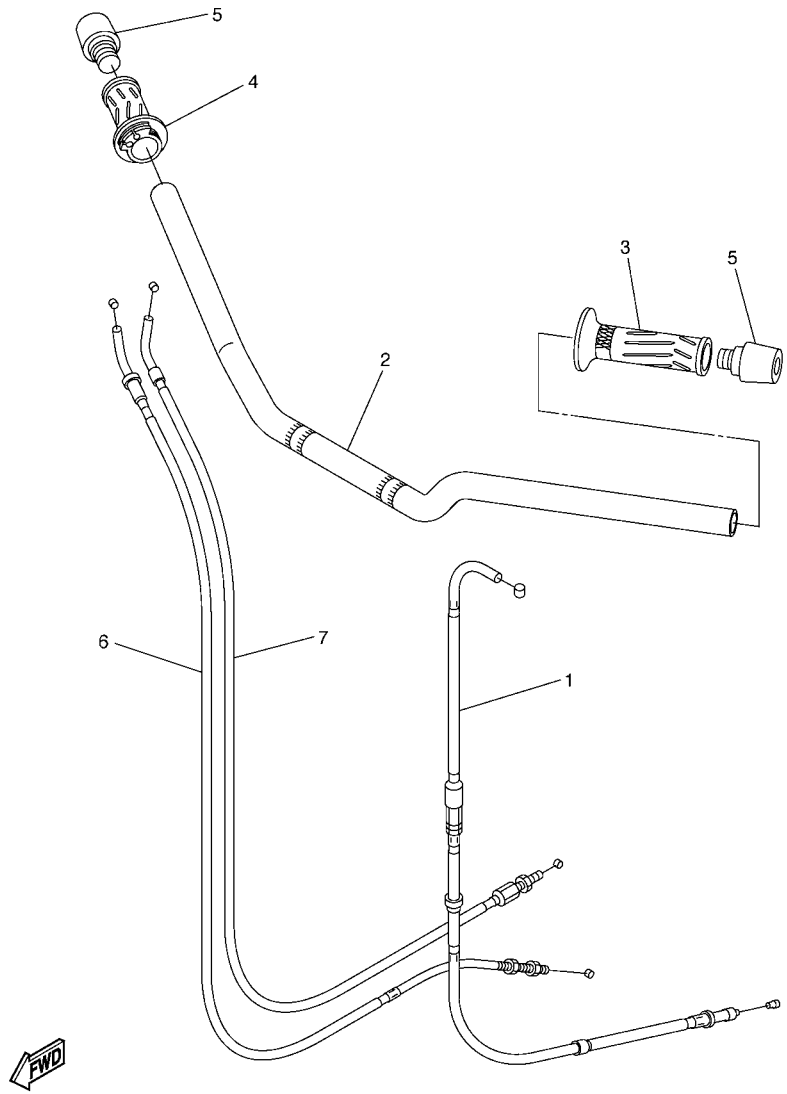

5VX6300-D330

FIG. 33 STEERING HANDLE & CABLE

REF. NO.	PART NO.	DESCRIPTION	5VX8	5VX9	5VXA			REMARKS
1	5VX–26335–00	CABLE, CLUTCH	1	1	1			
2	5VX–26111–00	HANDLEBAR	1	1	1			
3	4YR–26241–02	GRIP (LEFT)	1	1	1			
4	4YR–26240–02	GRIP ASSY	1	1	1			
5	51J–26246–01	END, GRIP	2	2	2			
6	5VX–26311–00	CABLE, THROTTLE 1	1	1	1			
7	5VX–26312–00	CABLE, THROTTLE 2	1	1	1			

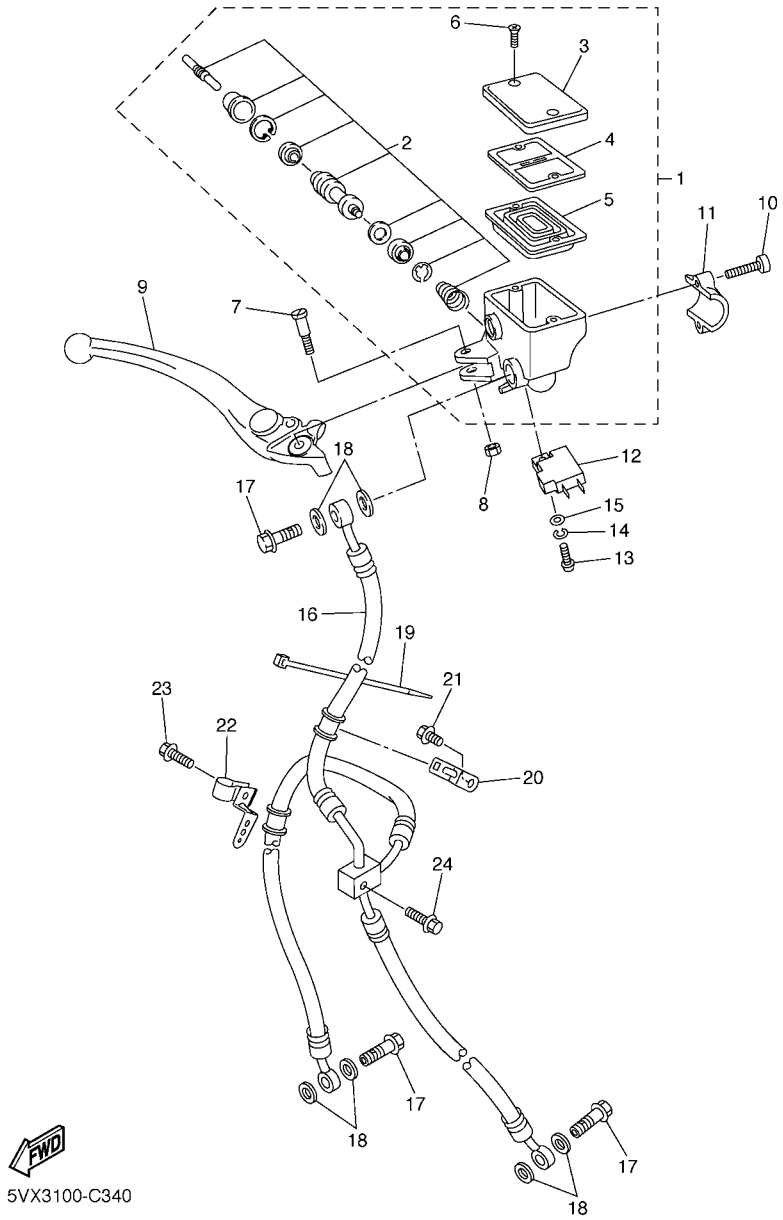

FIG. 34 FRONT MASTER CYLINDER

REF. NO.	PART NO.	DESCRIPTION	5VX8	5VX9	5VXA			REMARKS
1	5VS–W2587–00	MASTER CYLINDER SUB ASSY	1	1	1			
2	5VS–W0041–00	.CYLINDER KIT, MASTER	1	1	1			
3	5VS–25852–00	.CAP, RESERVOIR	1	1	1			
4	5VS–25855–00	.BUSH,DIAPHRAGM	1	1	1			
5	5VS–25854–00	.DIAPHRAGM, RESERVOIR	1	1	1			
6	5VS–2589H–00	.SCREW	2	2	2			
7	5VS–2589F–00	BOLT, LEVER	1	1	1			
8	95617–06100	NUT, U	1	1	1			
9	5VS–83922–00	LEVER 2	1	1	1			
10	5VS–26332–00	BOLT	2	2	2			
11	5VS–25867–00	BRACKET, MASTER CYLINDER	1	1	1			
12	4HM–83980–00	FRONT STOP SWITCH ASSY	1	1	1			
13	98502–04012	SCREW, PAN HEAD	1	1	1			
14	92902–04100	WASHER, SPRING	1	1	1			
15	92902–04600	WASHER, PLATE	1	1	1			
16	5VX–25872–00	HOSE, BRAKE 1	1	1	1			
17	90401–10159	BOLT, UNION	3	3	3			
18	90201–10118	WASHER, PLATE	6	6	6			
19	1UA–82591–00	BAND	1	1	1			
20	5SL–25876–00	HOLDER, BRAKE HOSE 2	1	1	1			
21	95807–06010	BOLT, FLANGE	1	1	1			
22	5VX–25875–10	HOLDER, BRAKE HOSE 1	1	1	1			
23	95027–06025	BOLT, FLANGE	1	1	1			
24	95027–06030	BOLT, FLANGE	1	1	1			

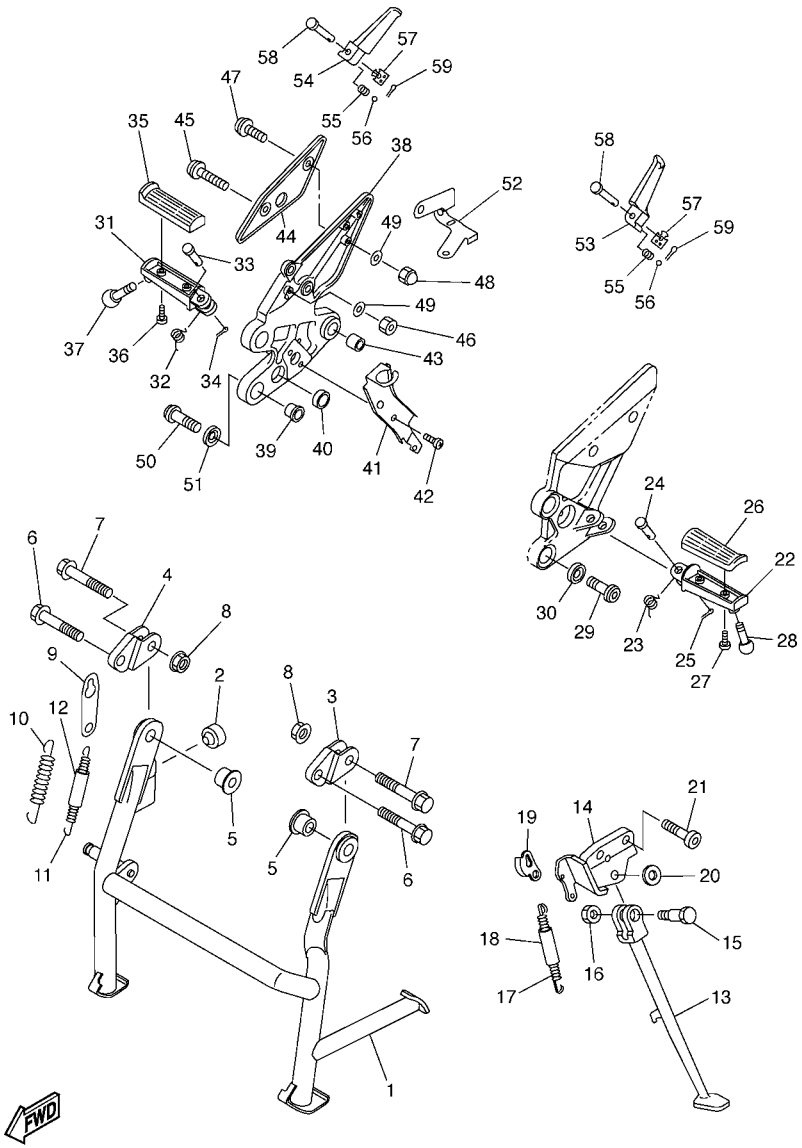

5VX6300-D350

FIG. 35 STAND & FOOTREST

REF. NO.	PART NO.	DESCRIPTION	5VX8	5VX9	5VXA			REMARKS
1	5VX–27111–03	STAND, MAIN	1	1	1			
2	4GL–27114–00	STOPPER, MAIN STAND	1	1	1			
3	5VX–27151–02	BRACKET, MAIN STAND	1	1	1			
4	5VX–27152–02	BRACKET, MAIN STAND 2	1	1	1			
5	5VX–27113–00	COLLAR, MAIN STAND	2	2	2			
6	90105–10088	BOLT, FLANGE	2	2	2			
7	90105–10090	BOLT, FLANGE	2	2	2			
8	95707–10500	NUT, FLANGE	4	4	4			
9	5VX–27115–00	LINK, MAIN STAND	1	1	1			
10	90506–50001	SPRING, TENSION	1	1	1			
11	90506–26008	SPRING, TENSION	1	1	1			
12	90445–170K9	HOSE (L60)	1	1	1			
13	5VX–27311–01	STAND, SIDE	1	1	1			
14	5VX–27321–02	BRACKET, SIDE STAND	1	1	1			
15	90109–10011	BOLT	1	1	1			
16	90185–10037	NUT, SELF-LOCKING	1	1	1			
17	90506–23007	SPRING, TENSION	1	1	1			
18	5VX–27351–00	GUIDE, SIDE STAND	1	1	1			
19	5VX–27315–00	LINK, SIDE STAND	1	1	1			
20	90201–12021	WASHER, PLATE	1	1	1			
21	90110–10010	BOLT, HEXAGON SOCKET HEAD	2	2	2			
22	4BH–27451–01	FOOTREST	1	1	1			
23	90508–20572	SPRING, TORSION	1	1	1			
24	91701–08040	PIN, CLEVIS	1	1	1			
25	91401–25015	PIN, COTTER	1	1	1			
26	3YX–27413–00	COVER, FOOTREST	1	1	1			
27	90157–05079	SCREW, PAN HEAD	2	2	2			

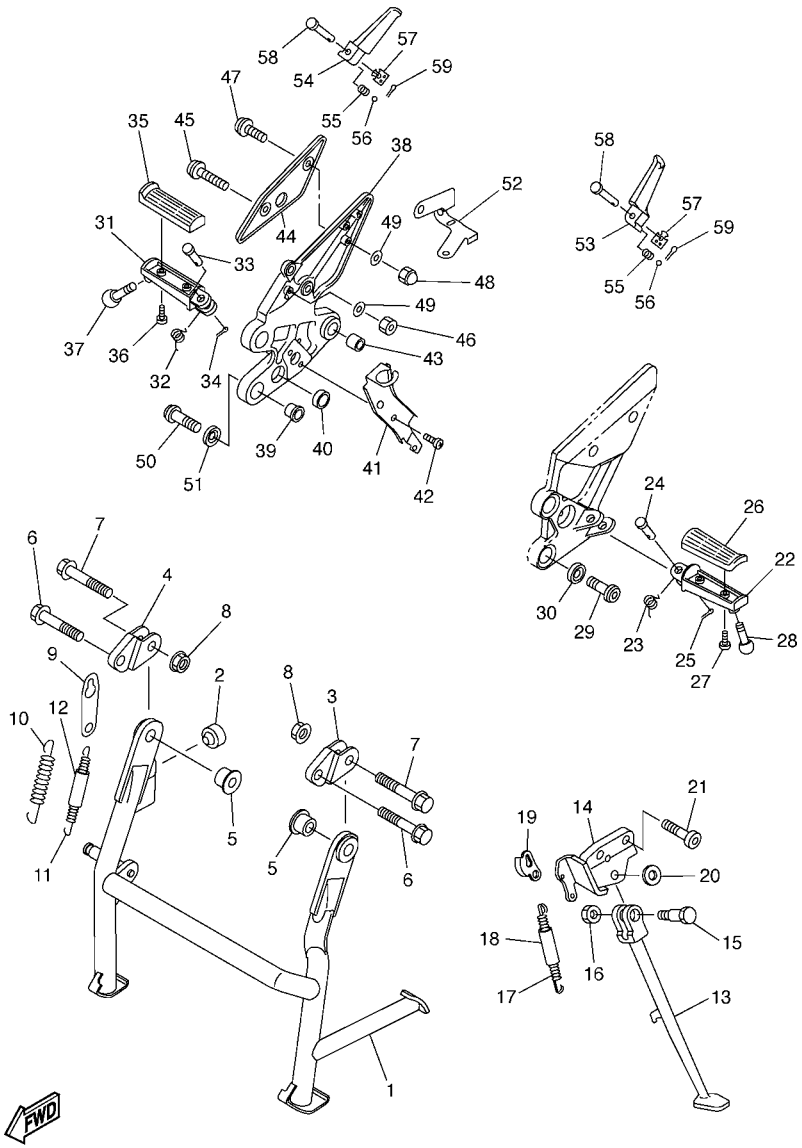

5VX6300-D350

FIG. 35 STAND & FOOTREST

REF. NO.	PART NO.	DESCRIPTION	5VX8	5VX9	5VXA			REMARKS
28	90109–083E2	BOLT	1	1	1			
29	90110–08220	BOLT, HEXAGON SOCKET HEAD	2	2	2			
30	90209–08295	WASHER	2	2	2			
31	4BH–27461–01	FOOTREST	1	1	1			
32	90508–20572	SPRING, TORSION	1	1	1			
33	91701–08040	PIN, CLEVIS	1	1	1			
34	91401–25015	PIN, COTTER	1	1	1			
35	3YX–27413–00	COVER, FOOTREST	1	1	1			
36	90157–05079	SCREW, PAN HEAD	2	2	2			
37	90109–083E2	BOLT	1	1	1			
38	5VX–27443–10	BRACKET 3	1	1	1			
39	5VX–27424–00	DAMPER, FOOTREST 2	2	2	2			
40	5VX–27114–00	STOPPER, MAIN STAND	1	1	1			
41	5VX–2144G–00	STAY, STOP SWITCH	1	1	1			
42	98507–06008	SCREW, PAN HEAD	2	2	2			
43	90383–14001	BUSH, FORMED	1	1	1			
44	5VX–27446–00	PLATE 2	1	1	1			
45	90111–05007	BOLT	1	1	1			
46	95607–05100	NUT, U	1	1	1			
47	90111–05003	BOLT	1	1	1			
48	90176–05001	NUT, CROWN	1	1	1			
49	92990–05200	WASHER, PLAIN	2	2	2			
50	90110–08220	BOLT, HEXAGON SOCKET HEAD	2	2	2			
51	90209–08295	WASHER	2	2	2			
52	5VX–2587A–00	HOLDER, BREAK HOSE	1	1	1			
53	3VR–27431–01	FOOTREST, REAR 1	1	1	1			
54	3VR–27441–01	FOOTREST, REAR 2	1	1	1			

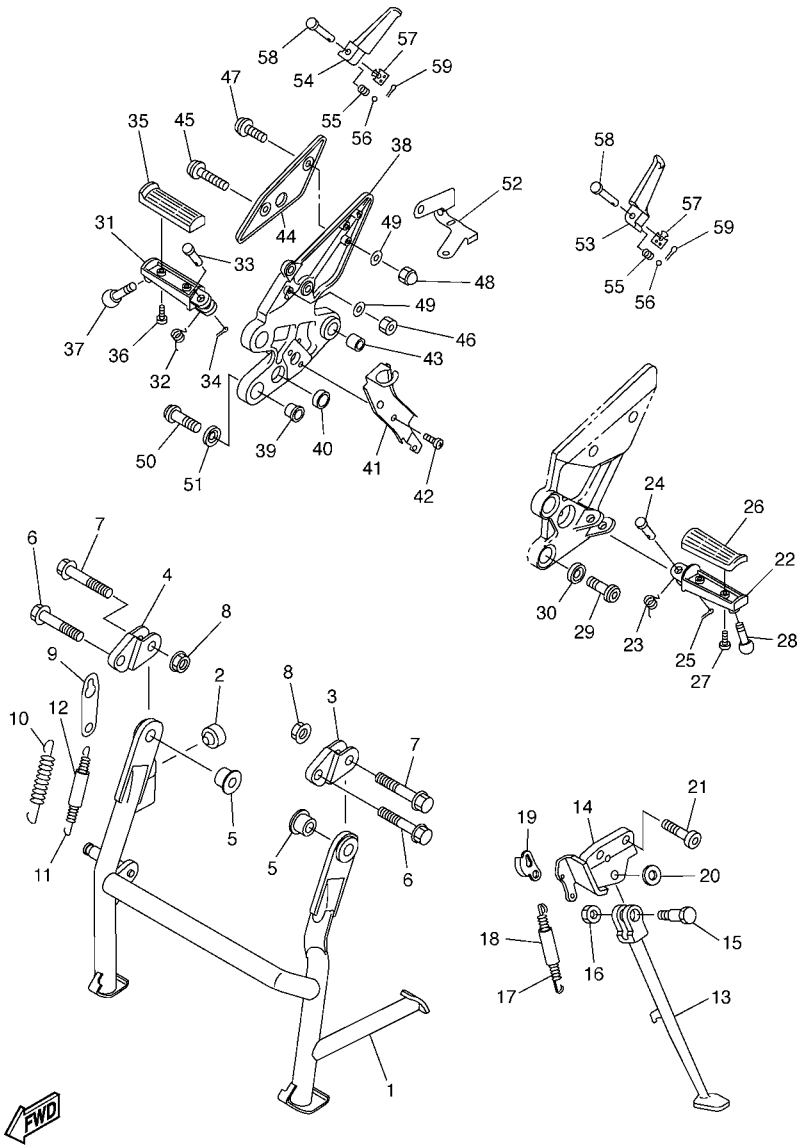

5VX6300-D350

FIG. 35 STAND & FOOTREST

REF. NO.	PART NO.	DESCRIPTION	5VX8	5VX9	5VXA			REMARKS
55	90501–12743	SPRING, COMPRESSION	2	2	2			
56	93501–04011	BALL	2	2	2			
57	5VX–27437–00	WASHER, SPECIAL	2	2	2			
58	90240–08063	PIN, CLEVIS	2	2	2			
59	91401–25015	PIN, COTTER	2	2	2			

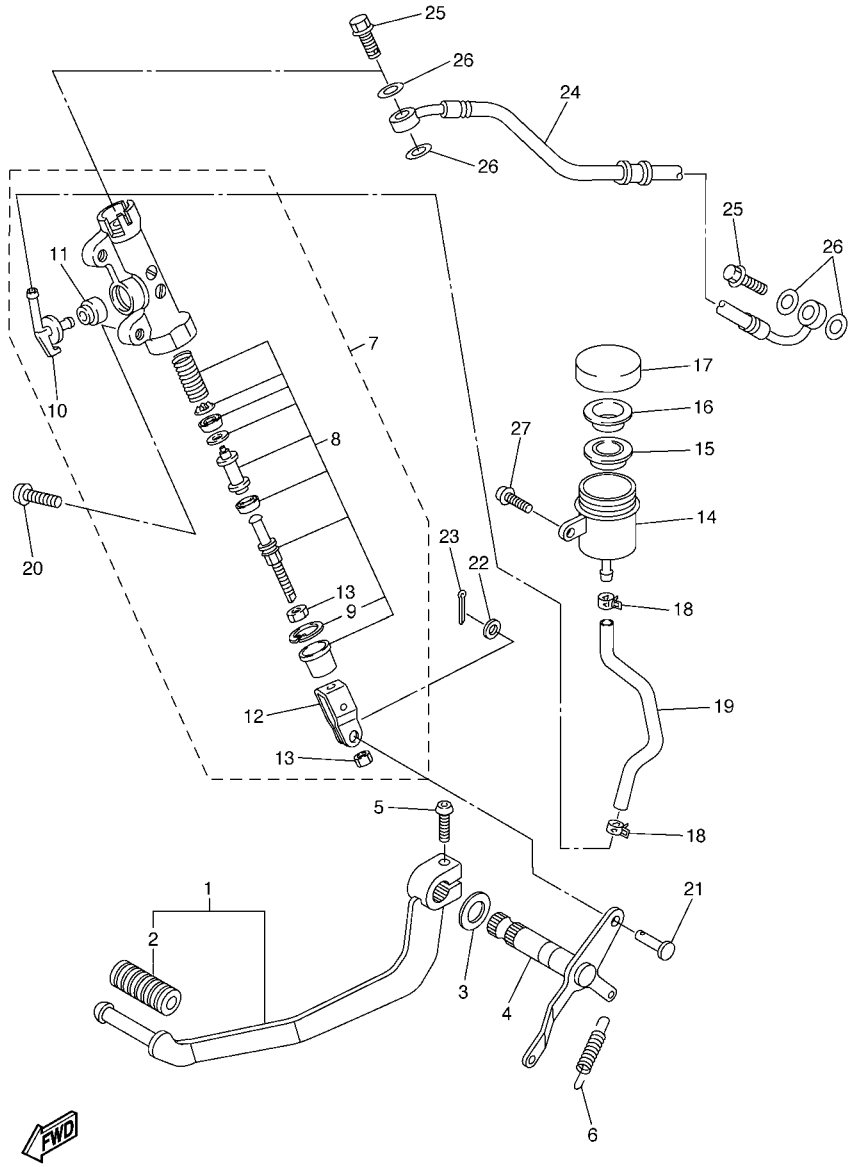

5VX1351-C360

FIG. 36 REAR MASTER CYLINDER

REF. NO.	PART NO.	DESCRIPTION	5VX8	5VX9	5VXA			REMARKS
1	5VX–27200–00	PEDAL, BRAKE	1	1	1			
2	5EB–18113–00	.COVER, SHIFT PEDAL	1	1	1			
3	90201–14215	WASHER, PLATE	1	1	1			
4	5VX–27212–00	SHAFT, BRAKE PEDAL	1	1	1			
5	92014–06020	BOLT, BUTTON HEAD	1	1	1			
6	90506–20223	SPRING, TENSION	1	1	1			
7	5VX–2583V–00	RR. MASTER CYLINDER ASSY.	1	1	1			
8	5VX–W0042–50	.CYLINDER KIT, MASTER	1	1	1			
9	3LN–2585G–00	..CIRCLIP	1	1	1			
10	5VX–2582A–00	.JOINT	1	1	1			
11	4BP–2585F–00	.BUSH	1	1	1			
12	4BP–27222–01	.JOINT	1	1	1			
13	90170–08010	.NUT	2	2	2			
14	5SL–25894–00	TANK, RESERVOIR	1	1	1			
15	5SL–25854–00	DIAPHRAGM, RESERVOIR	1	1	1			
16	5SL–25855–00	BUSH,DIAPHRAGM	1	1	1			
17	5SL–25852–00	CAP, RESERVOIR	1	1	1			
18	90467–090A1	CLIP	2	2	2			
19	5VX–25895–00	HOSE, RESERVOIR	1	1	1			
20	92014–08020	BOLT, BUTTON HEAD	2	2	2			
21	90240–08124	PIN, CLEVIS	1	1	1			
22	90201–08083	WASHER, PLATE	1	1	1			
23	91401–20012	PIN, COTTER	1	1	1			
24	5VX–2581K–00	HOSE, BRAKE 5	1	1	1			
25	90401–10159	BOLT, UNION	2	2	2			
26	90201–10118	WASHER, PLATE	4	4	4			
27	90119–06044	BOLT, WITH WASHER	1	1	1			

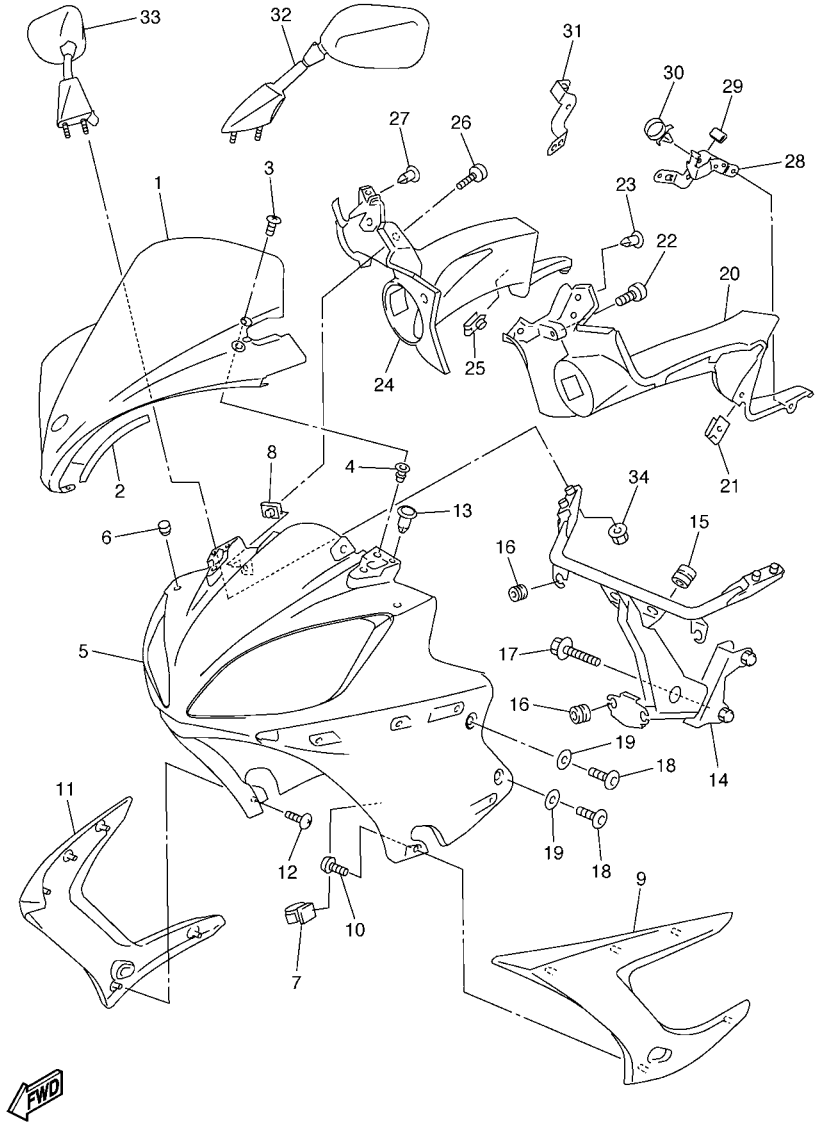

5VX8100-D370

FIG. 37 COWLING 1

REF. NO.	PART NO.	DESCRIPTION	5VX8	5VX9	5VXA			REMARKS
1	5VX–28381–30	WINDSHIELD	1	1	1			
2	5VX–28376–00	TRIM	2	2	2			
3	90150–05023	SCREW, ROUND HEAD	5	5	5			
4	90179–05523	NUT	5	5	5			
5	5VX–2835G–00	BODY, FRONT UPPER 1	1	1	1			UR FOR DPBML
	5VX–2835G–10	BODY, FRONT UPPER 1	1	1	1			UR FOR BS4
6	1J7–21717–00	DAMPER	2	2	2			
7	90464–54086	CLAMP	2	2	2			
8	90183–05074	NUT, SPRING	2	2	2			
9	5VX–2830C–00–P1	VISOR, SIDE 1	1	1	1			UR DPBML
	5VX–2830C–00–P4	VISOR, SIDE 1	1	1	1			UR BS4
10	97707–50016	SCREW, TAPPING	4	4	4			
11	5VX–2830D–00–P1	VISOR, SIDE 2	1	1	1			UR DPBML
	5VX–2830D–00–P4	VISOR, SIDE 2	1	1	1			UR BS4
12	97707–50016	SCREW, TAPPING	5	5	5			
13	90269–05049	RIVET	2	2	2			
14	5VX–28356–00	STAY 1	1	1	1			
15	90480–14585	GROMMET	2	2	2			
16	90480–14229	GROMMET	4	4	4			
17	90119–08081	BOLT, WITH WASHER	2	2	2			
18	90110–06200	BOLT, HEXAGON SOCKET HEAD	4	4	4			
19	90202–06170	WASHER, PLATE	4	4	4			
20	5VX–2836K–00	PANEL, INNER 1	1	1	1			UR FOR DPBML
	5VX–2836K–10	PANEL, INNER 1	1	1	1			UR FOR BS4
21	90183–06053	NUT, SPRING	1	1	1			
22	90110–05201	BOLT, HEXAGON SOCKET HEAD	1	1	1			
23	90269–05049	RIVET	1	1	1			

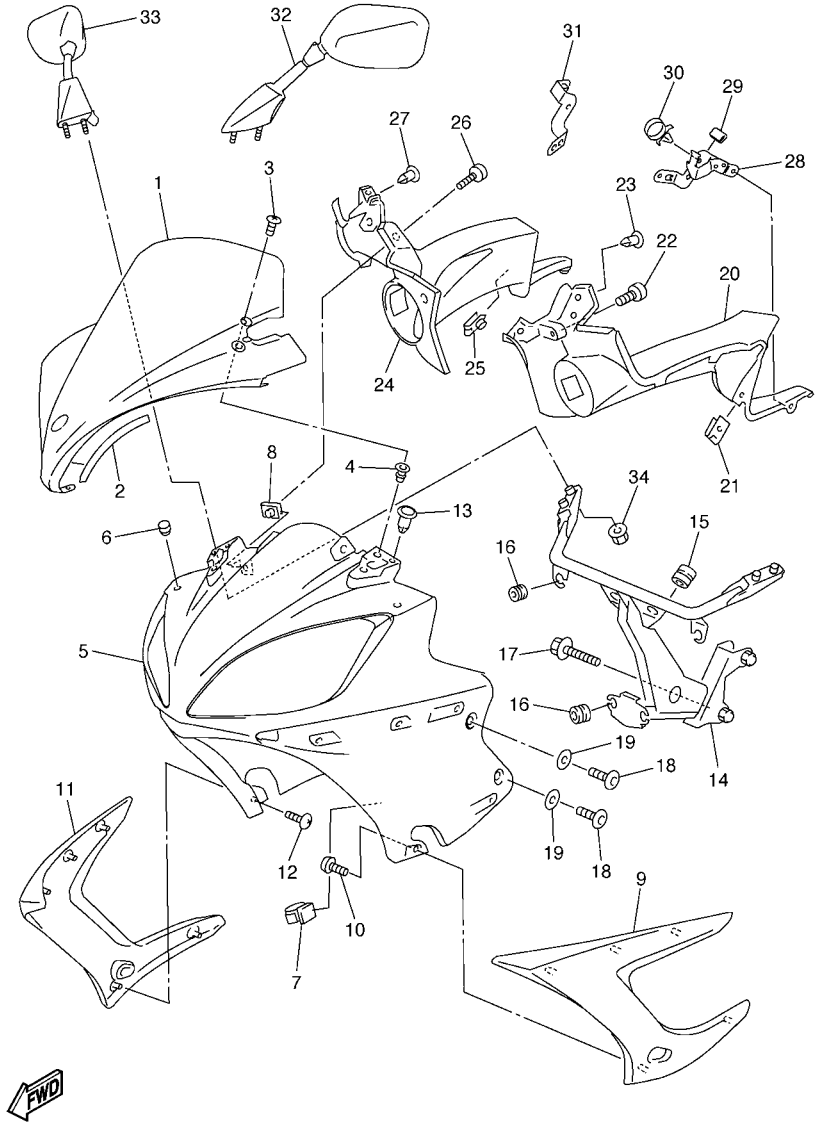

5VX8100-D370

FIG. 37 COWLING 1

REF. NO.	PART NO.	DESCRIPTION	5VX8	5VX9	5VXA			REMARKS
24	5VX–2836L–00	PANEL, INNER 2	1	1	1			UR FOR DPBML
	5VX–2836L–10	PANEL, INNER 2	1	1	1			UR FOR BS4
25	90183–06053	NUT, SPRING	1	1	1			
26	90110–05201	BOLT, HEXAGON SOCKET HEAD	1	1	1			
27	90269–05049	RIVET	1	1	1			
28	5VX–2836F–00	BRACKET 3	1	1	1			
29	1FK–2171M–00	MOLE, SIDE COVER 2	1	1	1			
30	90464–16006	CLAMP	1	1	1			
31	5VX–2836E–01	BRACKET 2	1	1	1			
32	5VX–26280–00	REAR VIEW MIRROR ASSY (LEFT)	1	1	1			
33	5VX–26290–00	REAR VIEW MIRROR ASSY (RIGHT)	1	1	1			
34	95707–06500	NUT, FLANGE	4	4	4			

FIG. 38 GENERATOR

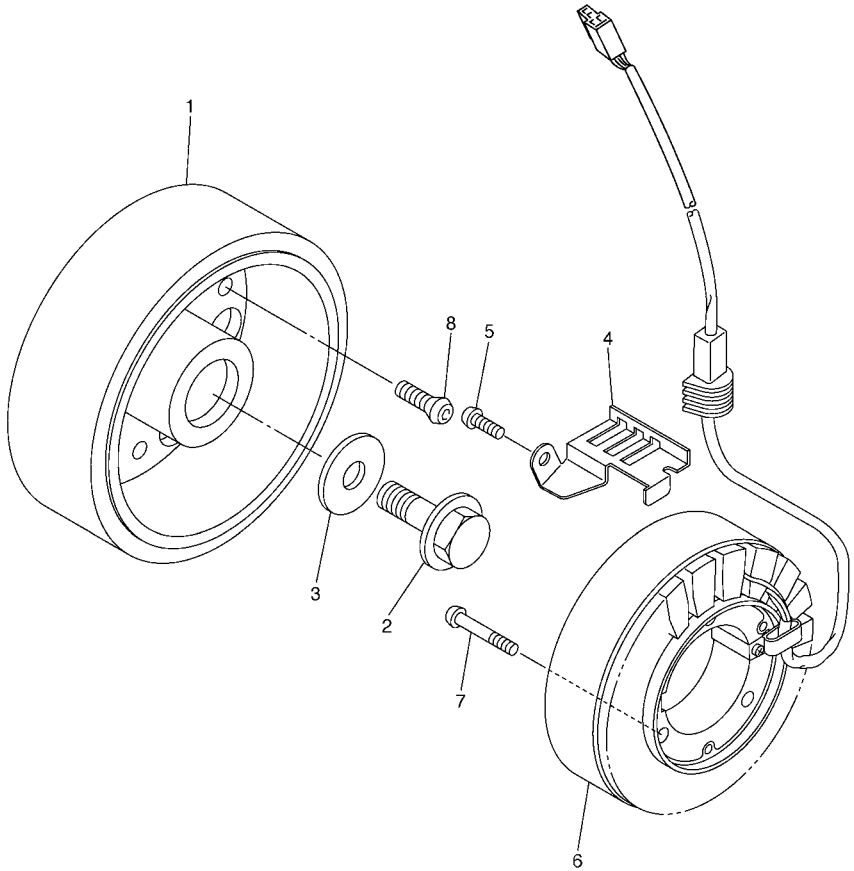

5VX1351-C380

REF. NO.	PART NO.	DESCRIPTION	5VX8	5VX9	5VXA			REMARKS
1	5VX–81450–00	ROTOR ASSY	1	1	1			
2	90105–126A8	BOLT, FLANGE	1	1	1			
3	90201–12008	WASHER, PLATE	1	1	1			
4	5VX–15484–00	CLAMP 2	1	1	1			
5	90149–06250	SCREW	1	1	1			
6	5VX–81410–00	STATOR ASSY	1	1	1			
7	90149–06019	SCREW	3	3	3			
8	90149–08003	SCREW	3	3	3			

FIG. 39 STARTING MOTOR

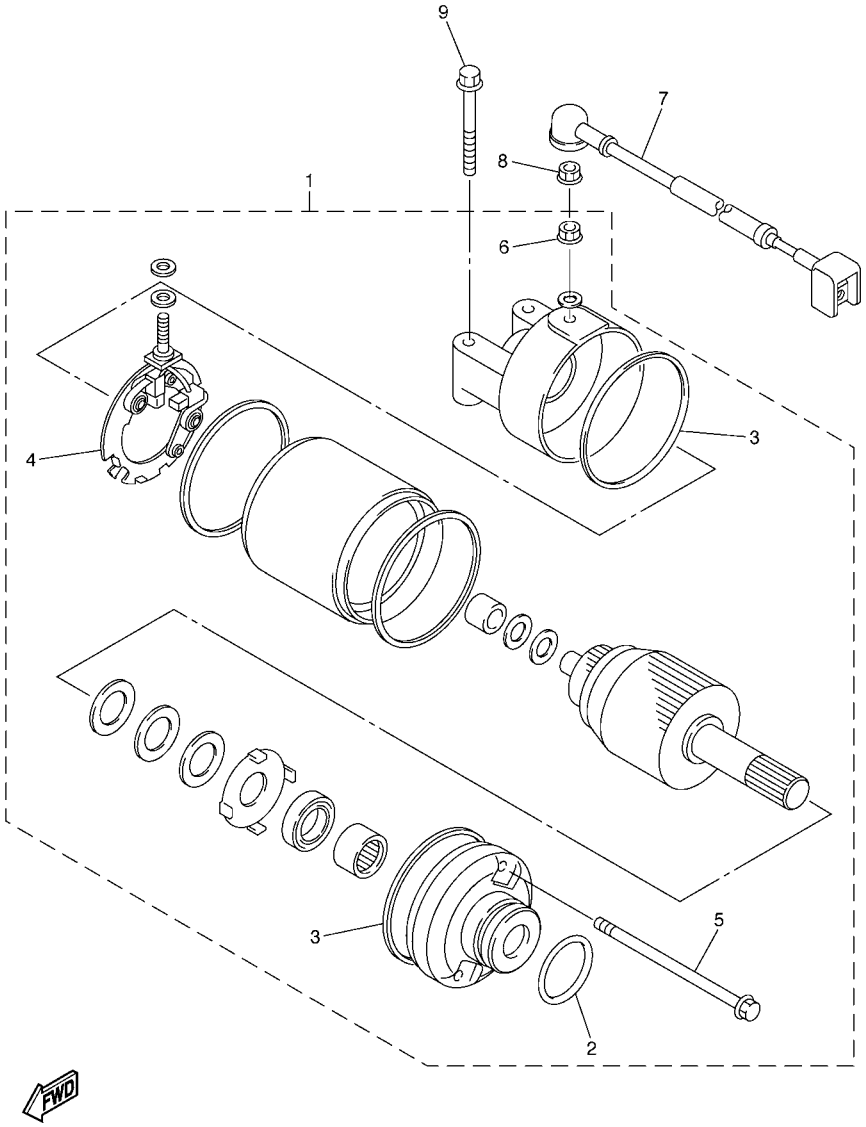

5VX1351-C390

REF. NO.	PART NO.	DESCRIPTION	5VX8	5VX9	5VXA			REMARKS
1	5EB–81890–00	MOTOR ASSY	1	1	1			
2	1FK–81847–00	.O-RING	1	1	1			
3	4WP–81844–00	.GASKET	2	2	2			
4	4WP–81801–00	.BRUSH SET	1	1	1			
5	4WP–81826–00	.BOLT	2	2	2			
6	4XV–8182A–00	.NUT	1	1	1			
7	5VX–81815–00	CORD, STARTER MOTOR	1	1	1			
8	4XV–8182A–00	NUT	1	1	1			
9	95027–06040	BOLT, FLANGE	2	2	2			

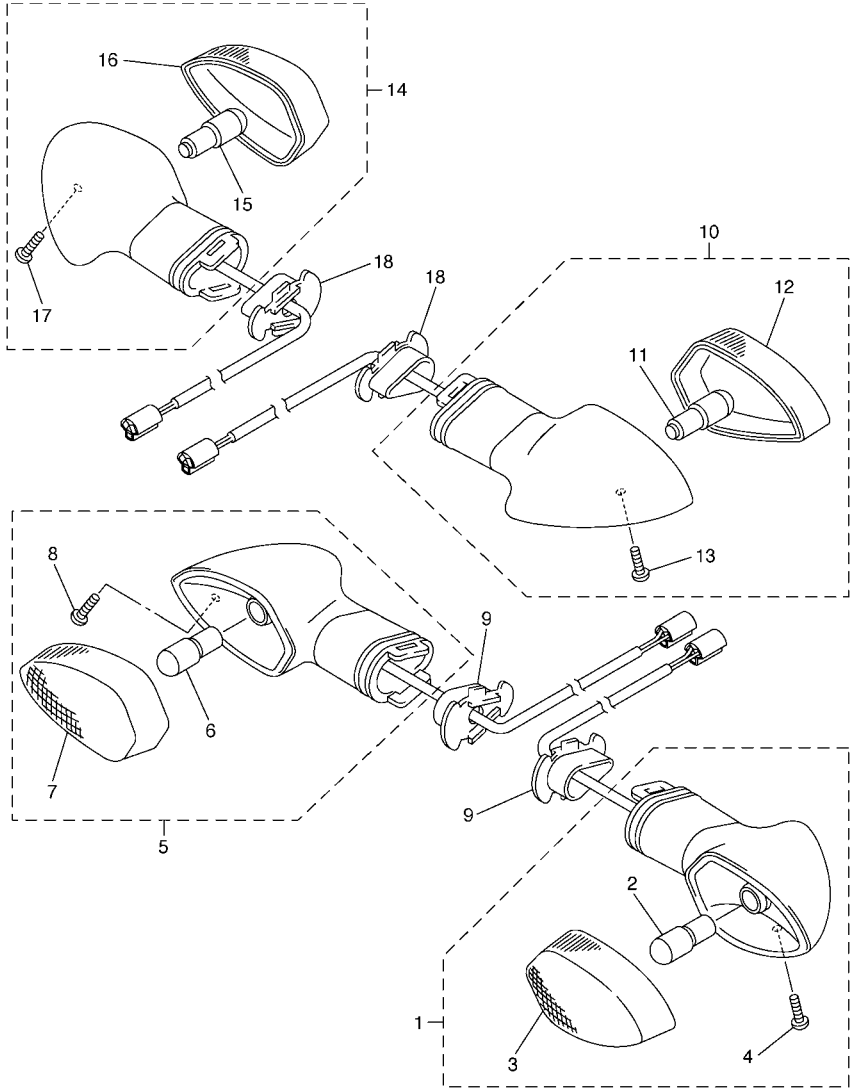

5VX3100-C400

FIG. 40 FLASHER LIGHT

REF. NO.	PART NO.	DESCRIPTION	5VX8	5VX9	5VXA			REMARKS
1	5PW–83310–10	FRONT FLASHER LIGHT ASSY 1	1	1	1			
2	5GJ–83331–00	.BULB, FLASHER(12V-21/5W T20)	1	1	1			
3	5PW–8333A–10	.LENS COMP	1	1	1			
4	97706–04012	.SCREW, TAPPING	1	1	1			
5	5PW–83320–10	FRONT FLASHER LIGHT ASSY 2	1	1	1			
6	5GJ–83331–00	.BULB, FLASHER(12V-21/5W T20)	1	1	1			
7	5PW–8334A–10	.LENS COMP	1	1	1			
8	97706–04012	.SCREW, TAPPING	1	1	1			
9	5PW–83318–00	STAY, FLASHER 1	2	2	2			
10	5VX–83330–10	REAR FLASHER LIGHT ASSY 1	1	1	1			
11	5PW–83331–00	.BULB (12V-21/5W T20)	1	1	1			
12	5PW–8334A–10	.LENS COMP	1	1	1			
13	97706–04012	.SCREW, TAPPING	1	1	1			
14	5VX–83340–10	REAR FLASHER LIGHT ASSY 2	1	1	1			
15	5PW–83331–00	.BULB (12V-21/5W T20)	1	1	1			
16	5PW–8333A–10	.LENS COMP	1	1	1			
17	97706–04012	.SCREW, TAPPING	1	1	1			
18	5PW–83318–00	STAY, FLASHER 1	2	2	2			

FIG. 41 METER

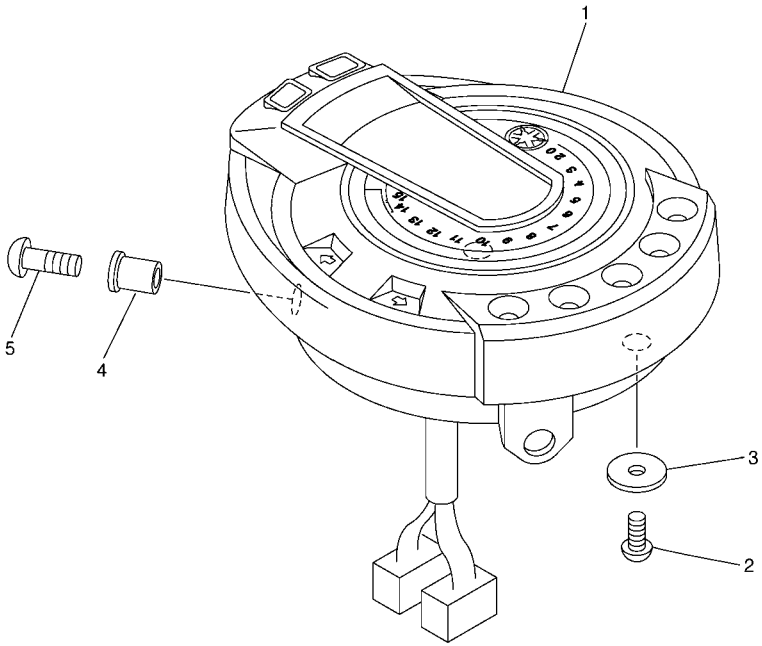

5VX1351-C410

REF. NO.	PART NO.	DESCRIPTION	5VX8	5VX9	5VXA			REMARKS
1	5VX–83500–20	SPEEDOMETER ASSY (MPH)	1	1				
	5VX–83500–30	SPEEDOMETER ASSY (KM/H)			1			
2	97707–50016	SCREW, TAPPING	2	2	2			
3	90201–06380	WASHER, PLATE	2	2	2			
4	90179–05523	NUT	2	2	2			
5	90154–05042	SCREW, BINDING	2	2	2			

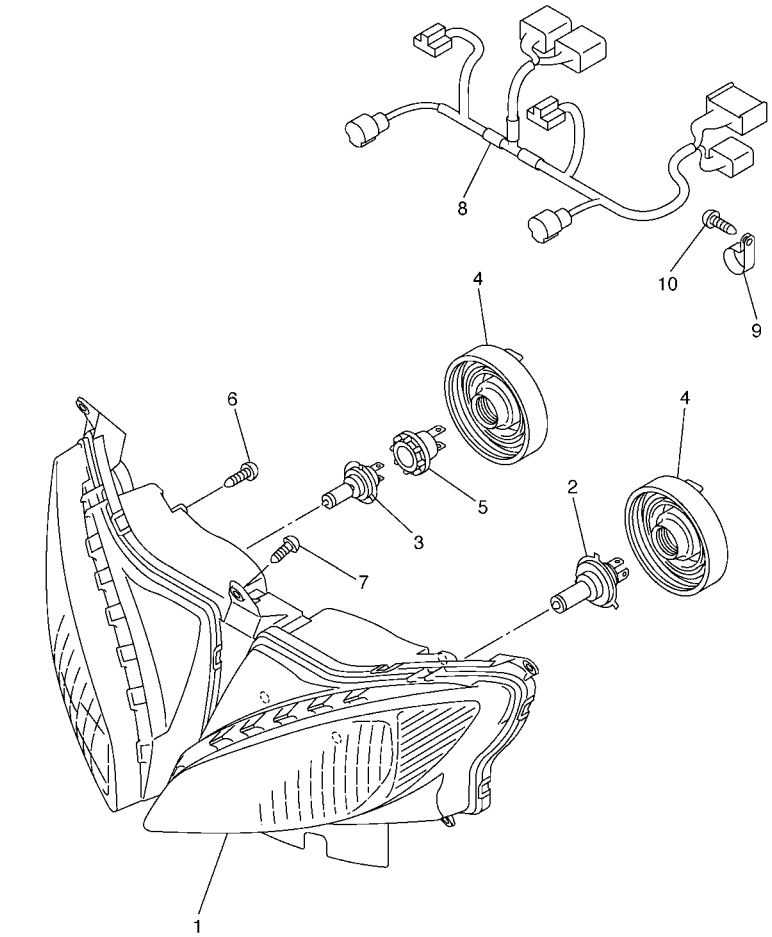

5VX3100-C420

FIG. 42 HEADLIGHT

REF. NO.	PART NO.	DESCRIPTION	5VX8	5VX9	5VXA			REMARKS
1	5VX–84310–20	HEADLIGHT UNIT ASSY	1	1	1			
2	8G9–84314–00	BULB (12V-60/55W)	1	1	1			(H4)HALOGEN
3	4SV–84314–00	BULB (12V-55W)	1	1	1			(H7)HALOGEN
4	5LV–84397–00	COVER, SOCKET	2	2	2			
5	4SV–84350–00	SOCKET CORD ASSY 2	1	1	1			
6	90164–05014	SCREW, TAPPING	4	4	4			
7	97707–50016	SCREW, TAPPING	5	5	5			
8	5VX–84359–20	CORD, HEADLIGHT	1	1	1			
9	90464–18029	CLAMP	1	1	1			
10	97707–50016	SCREW, TAPPING	1	1	1			

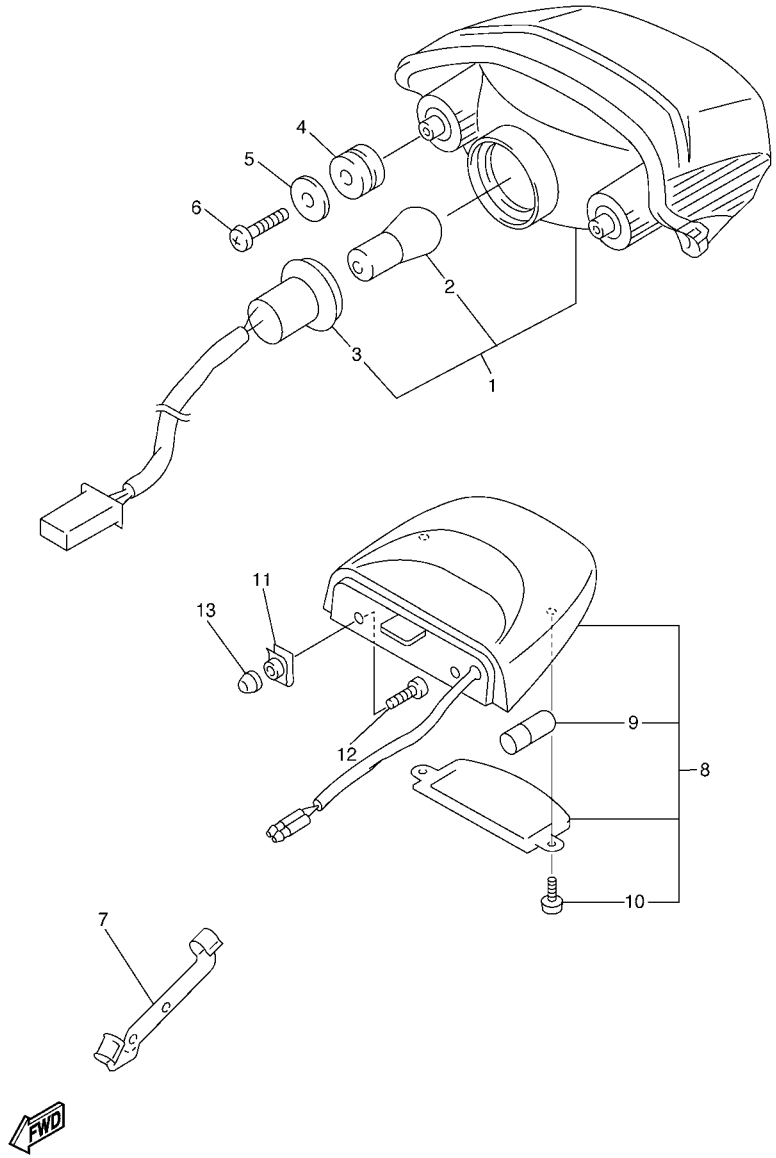

5VX1351-C430

FIG. 43 TAILLIGHT

REF. NO.	PART NO.	DESCRIPTION	5VX8	5VX9	5VXA			REMARKS
1	5VX–84710–10	TAILLIGHT UNIT ASSY	1	1	1			
2	137–84714–60	.BULB (12V-21/5W)	1	1	1			
3	5VX–84735–00	.CORD ASSY	1	1	1			
4	90480–18276	GROMMET	2	2	2			
5	90201–06071	WASHER, PLATE	2	2	2			
6	97707–60016	SCREW, TAPPING	2	2	2			
7	5VX–21637–00	CLAMP, WIRE	1	1	1			
8	5VX–84745–00	LICENCE LIGHT UNIT ASSY	1	1	1			
9	4HC–84744–00	.BULB (12V-5W)	1	1	1			
10	97706–04012	.SCREW, TAPPING	2	2	2			
11	90183–05061	NUT, SPRING	2	2	2			
12	98907–05014	SCREW, BIND	2	2	2			
13	5VX–13569–01	PLUG, BLIND	2	2	2			

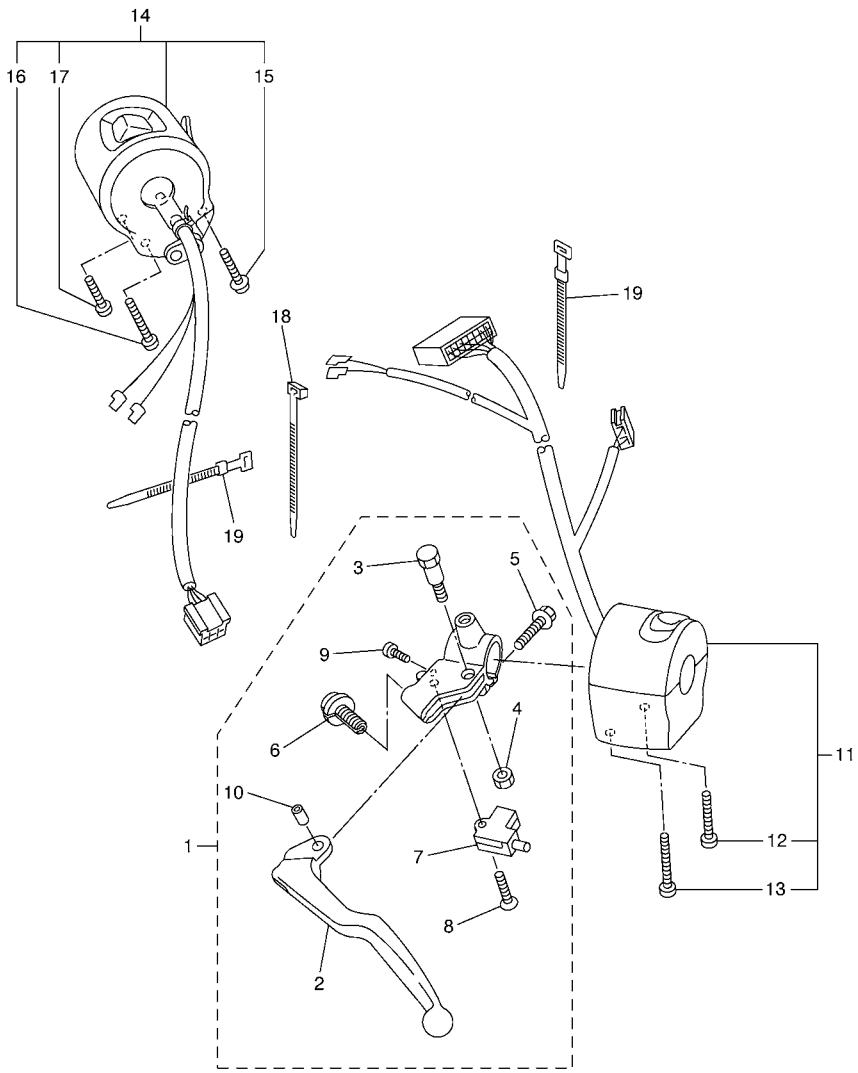

5VX3100-C440

FIG. 44 HANDLE SWITCH & LEVER

REF. NO.	PART NO.	DESCRIPTION	5VX8	5VX9	5VXA			REMARKS
1	5VX–82910–00	LEVER HOLDER ASSY (LEFT)	1	1	1			
2	5EB–83912–02	.LEVER 1	1	1	1			
3	4XV–83945–00	.BOLT, LEVER	1	1	1			
4	95607–06100	.NUT, U	1	1	1			
5	95027–06020	.BOLT, FLANGE	1	1	1			
6	5LV–83951–00	.BOLT, CABLE ADJUSTING	1	1	1			
7	3YX–82917–01	.SWITCH	1	1	1			
8	98704–03020	.SCREW, FLAT HEAD	1	1	1			
9	98507–04010	.SCREW, PAN HEAD	1	1	1			
10	5JJ–83913–00	.COLLAR, LEVER 1	1	1	1			
11	5VX–83972–00	SWITCH, HANDLE 4	1	1	1			
12	98507–05030	.SCREW, PAN HEAD	1	1	1			
13	98507–05045	.SCREW, PAN HEAD	1	1	1			
14	5VX–83975–00	SWITCH, HANDLE 2	1	1	1			
15	97607–05255	.SCREW,WITH WASHER	1	1	1			
16	98507–05045	.SCREW, PAN HEAD	1	1	1			
17	98507–05020	.SCREW, PAN HEAD	1	1	1			
18	1UA–82591–00	BAND	2	2	2			
19	437–83936–01	BAND, SWITCH CORD	2	2	2			

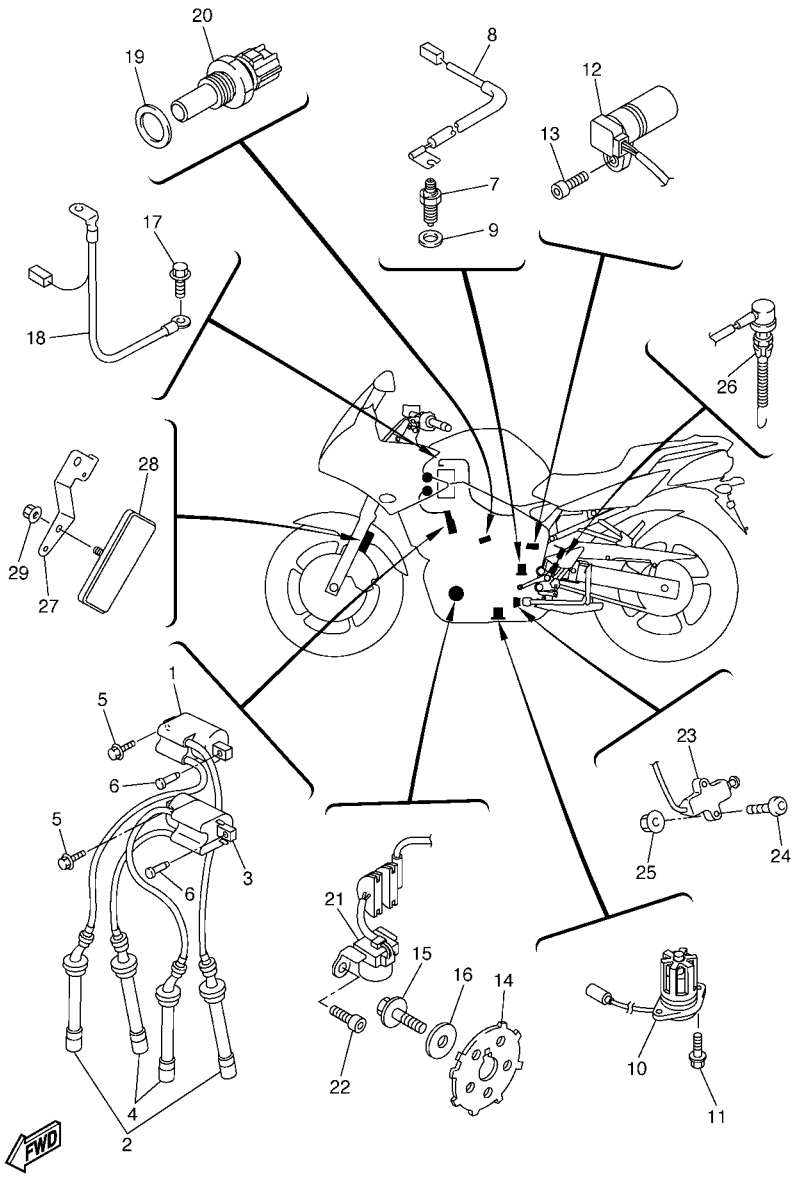

5VX3100-C450

FIG. 45 ELECTRICAL 1

REF. NO.	PART NO.	DESCRIPTION	5VX8	5VX9	5VXA			REMARKS
1	5VX–82310–00	IGNITION COIL ASSY	1	1	1			
2	5VX–82370–00	PLUG CAP ASSY	2	2	2			
3	5VX–82320–00	IGNITION COIL ASSY	1	1	1			
4	5VX–82370–00	PLUG CAP ASSY	2	2	2			
5	90105–06557	BOLT, FLANGE	2	2	2			
6	90269–06010	RIVET	2	2	2			
7	3GB–82540–01	NEUTRAL SWITCH ASSY	1	1	1			
8	5VX–82541–00	WIRE, LEAD	1	1	1			
9	90430–10148	GASKET	1	1	1			
10	5VX–85720–01	OIL LEVEL GAUGE ASSY	1	1	1			
11	95027–06016	BOLT, FLANGE	2	2	2			
12	5EB–83755–01	SENSOR, SPEED	1	1	1			
13	91317–06016	BOLT	1	1	1			
14	5VX–81673–00	ROTOR	1	1	1			
15	90105–08386	BOLT, FLANGE	1	1	1			
16	90201–08753	WASHER, PLATE	1	1	1			
17	91380–06012	BOLT	1	1	1			
18	5VX–82116–00	WIRE, MINUS LEAD	1	1	1			
19	90201–12790	WASHER, PLATE	1	1	1			
20	8CC–85790–01	THERMOSENSOR ASSY	1	1	1			
21	5VX–81670–00	PICK-UP ASSY	1	1	1			
22	91317–06016	BOLT	2	2	2			
23	5VS–82566–60	SWITCH, SIDE STAND	1	1	1			
24	92017–05025	BOLT, BUTTON HEAD	2	2	2			
25	95607–05200	NUT, U FLANGE	2	2	2			
26	5VX–82530–00	STOP SWITCH ASSY	1	1	1			
27	5VX–85112–00	BRACKET, REFLECTOR 1	1	1	1			

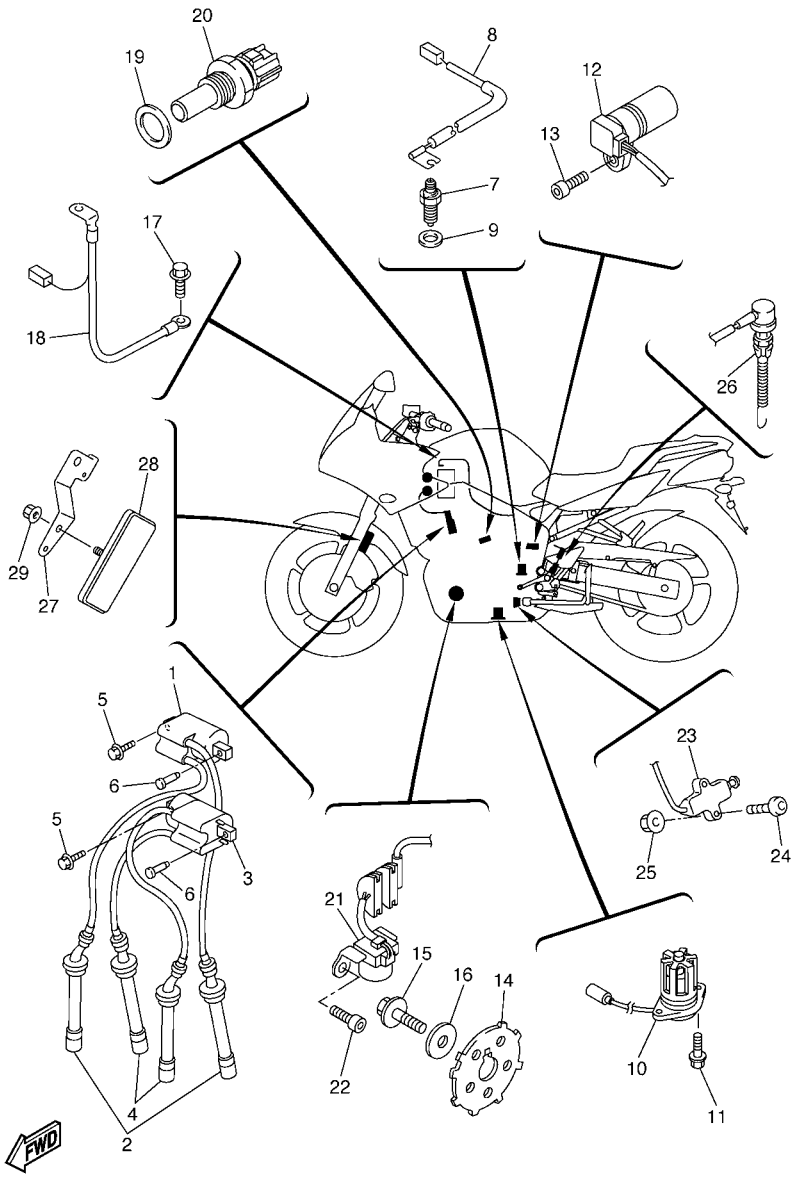

5VX3100-C450

FIG. 45 ELECTRICAL 1

REF. NO.	PART NO.	DESCRIPTION	5VX8	5VX9	5VXA			REMARKS
28	11H–85110–01	REFLECTOR ASSY	2	2	2			
29	95707–05500	NUT, FLANGE	2	2	2			

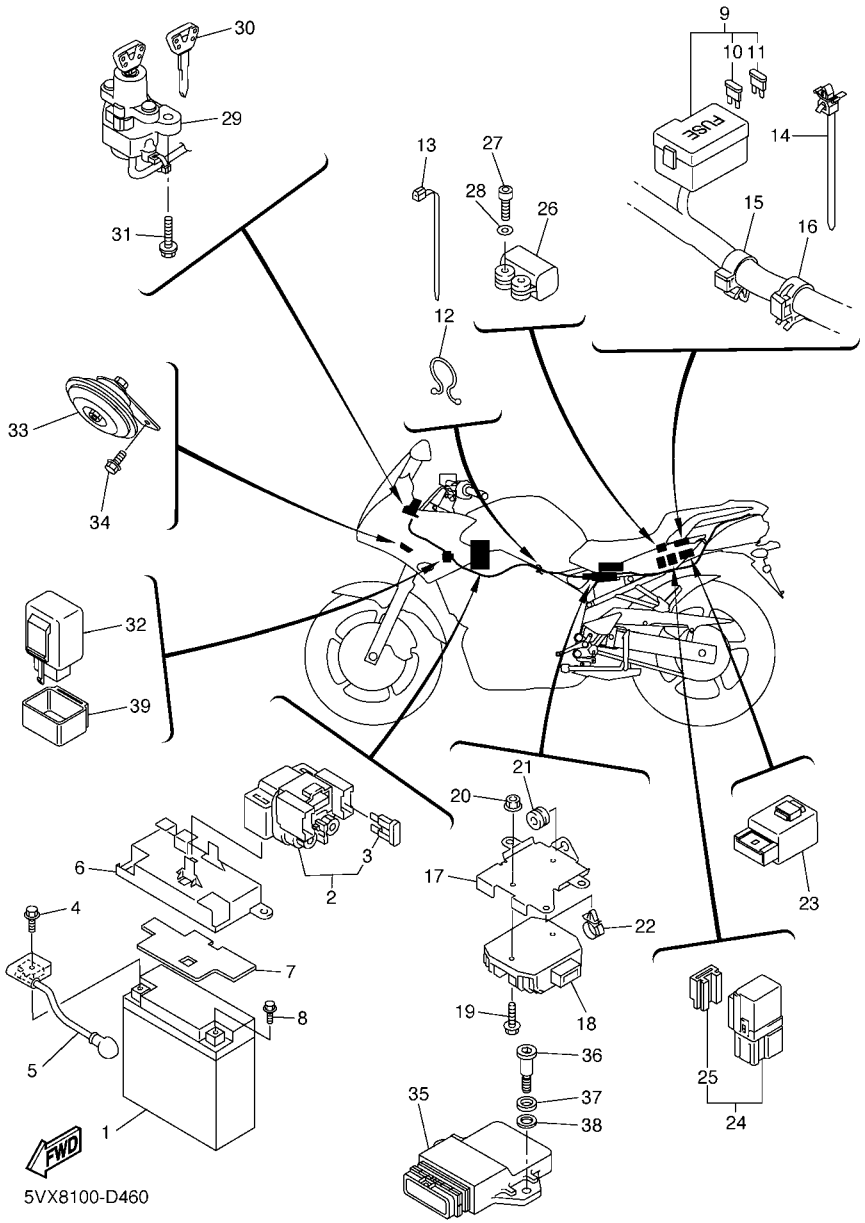

FIG. 46 ELECTRICAL 2

REF. NO.	PART NO.	DESCRIPTION	5VX8	5VX9	5VXA			REMARKS
1	4TX–82100–02	BATTERY ASSY (GS GT12B-4)	1	1	1			
2	4BH–81940–01	STARTER RELAY ASSY	1	1	1			
3	1AE–82151–00	.FUSE (30A-BL)	2	2	2			
4	95027–06008	BOLT, FLANGE	1	1	1			
5	5VX–82115–00	WIRE, PLUS LEAD	1	1	1			
6	5VX–2124E–00	COVER, BATTERY	1	1	1			
7	5VX–82123–00	SEAT, BATTERY	1	1	1			
8	95027–06008	BOLT, FLANGE	1	1	1			
9	5VX–82590–10	WIRE HARNESS ASSY	1	1	1			
10	5JJ–82151–30	.FUSE (10A-BL)	6	6	6			
11	5JJ–82151–20	.FUSE (20A-BL)	3	3	3			
12	90464–14058	CLAMP	1	1	1			
13	90464–13077	CLAMP	1	1	1			
14	90464–12089	CLAMP	1	1	1			
15	90464–16006	CLAMP	2	2	2			
16	90464–15192	CLAMP	2	2	2			
17	5VX–2128A–00	BRACKET, REGULATOR	1	1	1			
18	5VX–81960–00	RECTIFIER & REGULATOR ASSY	1	1	1			
19	95807–06020	BOLT, FLANGE	2	2	2			
20	95707–06500	NUT, FLANGE	2	2	2			
21	90480–11005	GROMMET	1	1	1			
22	90464–13249	CLAMP	1	1	1			
23	5VK–81950–30	RELAY ASSY	1	1	1			
24	5EA–81950–20	RELAY ASSY	2	2	2			
25	5EA–81952–00	.HOLDER, RELAY	1	1	1			
26	5PS–82576–01	EMERGENCY STOP SWITCH ASSY	1	1	1			
27	91317–04025	BOLT	2	2	2			

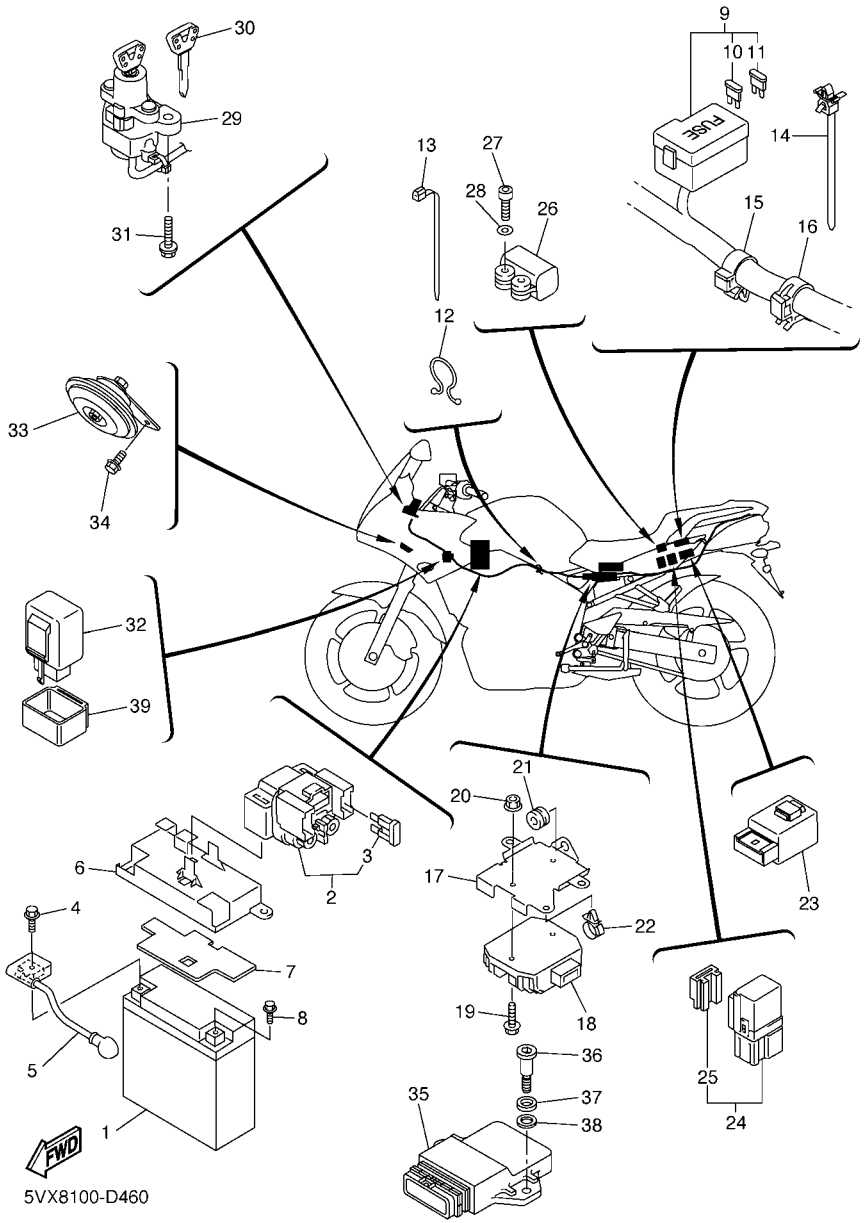

FIG. 46 ELECTRICAL 2

REF. NO.	PART NO.	DESCRIPTION	5VX8	5VX9	5VXA			REMARKS
28	90201–047A2	WASHER, PLATE	2	2	2			
29	5VX–82501–10	MAIN SWITCH STEERING LOCK	1	1	1			
30	4BH–82511–09	BLANK KEY	1	1	1			AP
31	90109–080G5	BOLT	2	2	2			
32	4VR–83350–00	FLASHER RELAY ASSY	1	1	1			
33	5VX–83371–01	HORN	1	1	1			
34	95807–06010	BOLT, FLANGE	1	1	1			
35	5VX–8591A–10	ENGINE CONTROL UNIT ASSY	1		1			
	5VX–8591A–20	ENGINE CONTROL UNIT ASSY		1				
36	90109–06055	BOLT	2	2	2			
37	5VX–21778–00	DAMPER, LOCATING 1	2	2	2			
38	90202–08205	WASHER, PLATE	2	2	2			
39	4VR–8338V–00	DAMPER	1	1	1			

NUMERICAL INDEX

PART NO.	GRID NO.
5VX–11101–01	B – 2
4KG–1111G–00	B – 2
5EB–11133–10	B – 2
5SL–11165–00	C – 4
5VX–11181–00	B – 2
5VX–11191–00	B – 2
5SL–11193–00	B – 2
214–11198–01	B – 11
5SL–11411–00	B – 3
5EB–11416–00	B – 3
5EB–11416–10	B – 3
5EB–11416–20	B – 3
5EB–11416–30	B – 3
5EB–11416–A0	B – 3
5SL–11603–00	B – 3
5SL–11631–00	B – 3
5EB–11633–00	B – 3
5VX–11650–00	B – 3
5VX–11654–00	B – 3
5VX–11656–00	B – 3
5VX–11656–10	B – 3
5VX–11656–20	B – 3
5VX–11656–30	B – 3
5SL–12111–10	B – 4
5EB–12113–00	B – 4
5EB–12114–00	B – 4
5SL–12116–00	B – 4
5EB–12117–00	B – 4
1HX–12118–00	B – 4
4TV–12119–00	B – 4
5SL–12121–10	B – 4
5EB–12124–01	B – 4
5EB–12126–00	B – 4
5EB–12127–00	B – 4
5EB–12153–09	B – 5
5EB–12153–20	B – 5
5EB–12153–30	B – 5
1HX–12168–00	B – 4
1HX–12168–20	B – 4
1HX–12168–40	B – 4
1HX–12168–60	B – 4
1HX–12168–80	B – 4
1HX–12168–A0	B – 4
1HX–12168–F0	B – 4
1HX–12168–H1	B – 4
1HX–12168–K1	B – 4
1HX–12168–M1	B – 4
1HX–12168–R1	B – 4

PART NO.	GRID NO.
1HX–12168–U1	B – 4
1HX–12168–W1	B – 4
1HX–12168–Y1	B – 4
1HX–12169–11	B – 4
1HX–12169–31	B – 4
1HX–12169–50	B – 5
1HX–12169–70	B – 5
1HX–12169–90	B – 5
1HX–12169–E0	B – 5
1HX–12169–G0	B – 5
1HX–12169–J0	B – 5
1HX–12169–L0	B – 5
1HX–12169–N0	B – 5
1HX–12169–T0	B – 5
5VX–12170–00	B – 6
5VX–12176–00	B – 6
5VX–12180–00	B – 6
5SL–12210–10	B – 6
4FM–12213–00	B – 6
5SL–12214–00	B – 6
5EL–12228–00	B – 6
5BE–12241–00	B – 2
5EB–12251–00	B – 6
5EB–12252–10	B – 6
5VX–12405–00	B – 8
5VX–1240J–00	B – 8
5SL–12410–00	B – 8
5VX–12413–00	B – 8
5VX–12421–00	B – 7
5VX–12422–00	B – 7
1KT–12437–00	B – 8
11H–12438–10	B – 7
5EB–12439–00	B – 7
5VX–1243A–00	B – 9
5VX–1243E–00	B – 14
5VX–1244E–00	B – 8
5VX–1244G–00	B – 9
5EB–12450–00	B – 7
5VX–12461–00	B – 8
4FL–12462–00	B – 8
5VX–12467–00	B – 8
5EB–12469–00	B – 7
5GV–1246A–00	B – 7
5GV–1246E–00	B – 7
	B – 8
5VX–12491–00	B – 9
1AA–12535–00	B – 8
5EB–12577–01	B – 7

PART NO.	GRID NO.
5VX–12578–00	B – 8
4NK–12579–00	B – 7
5VX–12579–00	B – 8
5VX–12581–00	B – 7
5SL–12588–01	B – 7
5VX–12589–00	B – 9
5EB–12822–00	B – 11
5VX–13160–00	B – 14
5EB–13161–00	B – 10
5EB–1316E–00	B – 10
5MT–13300–00	B – 10
5SL–13410–00	B – 10
5VX–13414–00	B – 11
5EB–13415–00	B – 10
5JW–13416–00	B – 10
5VX–13417–00	B – 11
5VX–13418–00	C – 4
5GH–13440–10	B – 11
5EB–13470–00	B – 11
5JW–13473–00	B – 11
5EB–13475–00	B – 11
3KS–13490–00	B – 11
5VX–13533–00	B – 14
68V–13533–00	B – 13
5VX–13569–01	F – 7
5SL–13586–01	B – 12
5SL–13596–01	B – 12
5VX–13750–01	B – 13
5VX–13750–10	B – 13
5VX–13761–00	B – 13
5EB–13898–00	B – 10
5VX–13907–01	D – 14
5VX–13971–00	D – 14
5JW–14104–00	B – 13
5VX–1410E–00	B – 13
4KM–14137–00	B – 13
3H1–14147–00	B – 14
5PS–14147–00	B – 13
5VX–14148–01	B – 12
5VX–14149–00	B – 13
8CC–14216–10	B – 13
3XV–14251–00	B – 13
5PW–14251–00	B – 13
5VX–14348–00	B – 13
5FL–14348–10	B – 13
5VX–14349–00	B – 14
5VX–14396–00	B – 13
5VX–14409–00	B – 12

PART NO.	GRID NO.
5VX–14411–00	B – 12
5VX–14421–00	B – 12
5CA–14435–00	B – 12
5VX–14451–00	B – 12
5VX–14452–00	B – 12
5VX–14453–00	B – 12
5VX–14463–00	B – 12
5VX–14465–00	B – 14
5VX–14466–00	D – 15
5VX–14503–00	B – 14
5VX–14565–00	B – 13
5VX–14602–00	C – 2
3YF–14613–01	C – 2
5VX–1467K–00	C – 2
5VX–14708–10	C – 2
5VX–14710–00	C – 2
3XW–14714–00	C – 2
5EB–14714–01	C – 2
5JW–14723–00	B – 15
5VX–14740–00	C – 2
4FB–14766–00	C – 2
5VX–14807–00	B – 14
5SL–1482K–00	B – 2
5VX–14840–00	B – 15
5VX–14881–00	B – 15
5VX–14882–00	B – 15
5VX–14883–00	B – 15
5SL–14890–00	B – 2
5SL–14899–00	B – 2
3UH–14937–00	B – 13
5VX–14987–00	B – 13
5VX–15100–00	C – 4
11H–15138–00	B – 2
5EB–15155–00	C – 4
5EB–15163–01	C – 11
36Y–15189–00	C – 4
5SL–15189–00	C – 4
3F9–15362–00	C – 6
5EB–15362–00	C – 4
5VX–15373–00	B – 12
5VX–15411–00	C – 6
5VX–15413–01	C – 4
5VX–15416–00	C – 6
5VX–15418–00	C – 6
5VX–15421–00	C – 6
5VX–15425–00	C – 6
5VX–15441–00	C – 7
5VX–15451–00	C – 6

PART NO.	GRID NO.
5SL–15456–00	C – 6
5SL–15461–00	C – 6
5SL–15462–00	C – 4
5VX–15463–00	C – 7
5VX–15484–00	F – 2
5SL–15512–00	C – 8
5MT–15515–00	C – 8
5EB–15521–00	C – 8
5SL–15590–00	C – 8
5VX–16150–00	C – 9
5EB–16154–00	C – 9
1AE–16164–00	C – 9
4FN–16321–00	C – 9
4H7–16321–02	C – 9
168–16324–00	C – 9
3J2–16324–00	C – 9
5VX–16340–00	C – 9
132–16346–00	C – 14
5EB–16351–01	C – 9
5EB–16356–01	C – 9
5VX–16371–00	C – 9
5VX–16382–00	C – 9
5SL–17121–00	C – 11
5SL–17131–20	C – 11
5VX–17151–00	C – 11
5SL–17161–00	C – 11
5SL–17211–00	C – 12
5VX–17221–00	C – 11
5SL–17231–00	C – 12
5SL–17241–00	C – 11
5VX–17251–00	C – 12
5VX–17261–00	C – 11
5SL–17411–00	C – 11
5SL–17421–00	C – 11
278–17424–01	C – 12
5VX–17460–00	C – 12
5VX–18101–11	C – 14
5VX–18110–00	C – 14
5VX–18112–01	C – 14
5EB–18113–00	C – 14
	E – 13
5VX–18115–01	C – 14
5VX–18116–00	C – 14
5SL–18127–00	C – 14
5VX–18140–00	C – 14
5VX–18154–00	C – 14
5SL–18511–00	C – 13
5MT–18512–00	C – 13

PART NO.	GRID NO.
5EB–18513–00	C – 13
4XV–18531–00	C – 13
5EB–18536–00	C – 13
5VX–18540–00	C – 13
136–18542–00	C – 13
5VX–21110–00	D – 2
5PW–2117K–00	E – 2
5VX–2117M–01	D – 3
5VX–21190–01	D – 2
5VX–21228–00	D – 7
5VX–21238–00	D – 2
5VX–21239–00	D – 2
5VX–21249–00	D – 3
5VX–2124E–00	F – 11
5VX–21268–00	D – 2
5VX–21269–00	D – 3
5VX–21279–00	D – 2
5VX–21289–00	D – 2
5VX–2128A–00	F – 11
5VX–2135F–00	D – 3
5VX–2139R–00	D – 3
5VX–2139W–00	D – 3
5VX–21446–00	C – 2
5VX–21446–10	C – 3
5VX–2144G–00	E – 11
5VX–21511–00	D – 4
5VX–21511–10	D – 4
5VX–21575–00	D – 4
5VX–2161G–00	D – 5
5VX–21621–10	D – 5
5VX–21629–00	D – 5
5VX–21637–00	F – 7
5VX–21639–00	D – 4
5VX–2163A–00	D – 8
5VX–2164F–00	D – 6
5VX–2164H–00	D – 5
5VX–2164J–00	D – 5
5VX–21650–00	D – 9
5VX–21651–00	D – 4
5VX–21665–00	D – 5
5VX–21669–00	D – 4
5VX–21710–00	D – 7
5VX–21710–10	D – 7
1J7–21717–00	E – 14
1FK–2171M–00	E – 15
5VX–21720–00	D – 7
5VX–21720–10	D – 7
5VX–21732–00	D – 4

NUMERICAL INDEX

PART NO.	GRID NO.
5VX–21735–01	D – 4
5VX–2173M–00	D – 7
5VX–2173M–10	D – 7
5VX–2173N–00	D – 6
5VX–2174X–00	D – 7
5VX–2174Y–00	D – 7
5VX–21778–00	F – 12
5VX–21779–00	D – 7
5VX–2177F–00	D – 8
5VX–2177G–00	D – 2
5VX–21781–11	D – 8
5VX–21781–30	D – 8
5VX–2179R–10	D – 9
5VX–2179V–10	D – 9
5VX–21816–00	D – 7
26H–21828–00	D – 7
5VX–21843–00	D – 8
5VX–21871–00	D – 7
5VX–21873–00	D – 7
5VX–21875–00	D – 7
5VX–22110–10	D – 9
5JJ–22128–00	D – 9
4FN–22141–00	D – 9
5VX–22151–00	D – 9
5EB–22184–00	D – 9
5VX–22210–10	D – 10
5VX–22210–20	D – 10
34L–22216–00	D – 10
5VX–22836–00	D – 8
5VX–23102–00	D – 12
5VX–23103–00	D – 12
5VX–23110–00	D – 12
4TX–23115–00	D – 12
5VX–23118–00	D – 12
5VX–2311H–00	D – 12
4KM–23123–01	D – 13
4TX–23125–A0	D – 12
5VX–23126–00	D – 12
4TX–23135–A0	D – 12
5VX–23136–00	D – 12
5VX–23141–00	D – 12
4TX–23144–00	D – 12
5VX–23145–00	D – 12
4TX–23151–00	D – 12
4TX–23156–00	D – 12
5VX–23170–00	D – 12
4TX–23173–00	D – 12
4TX–2331G–00	D – 12

PART NO.	GRID NO.
5VX–23340–00	D – 13
5VX–23377–00	D – 11
5VX–23389–00	D – 11
5VX–23415–00	D – 11
26H–23418–01	D – 11
5VX–23435–10	D – 11
4H7–23441–01–35	D – 11
3FV–23462–00	D – 13
5VX–2411B–00	D – 14
5VX–24141–00	D – 15
5EJ–2414H–00	B – 12
	D – 2
5VX–24170–00	D – 15
5RB–24180–00	D – 15
5VX–24181–00	D – 14
5VX–24183–00	D – 14
5VX–24191–00	D – 14
5PW–24192–00	D – 14
5VX–2419F–00	D – 15
5VX–24314–00	D – 15
68V–24376–00	B – 13
3YJ–24481–00	D – 2
5JW–24486–00	D – 14
5SL–24491–00	D – 14
5JJ–24602–00	D – 14
5VX–24711–00	E – 2
5VX–24724–00	E – 2
4NK–24728–00	E – 2
5VX–24730–01	E – 2
5VX–24773–00–P1	D – 4
5VX–24773–00–P5	D – 4
4BP–24780–00	E – 2
5VX–2478E–00	E – 2
4BP–24792–00	E – 2
4XV–25117–00	E – 3
5SL–25168–00–35	E – 3
5SL–25168–00–98	E – 3
4XV–25181–00	E – 3
4XV–25317–00	E – 5
5SL–25338–00–35	E – 5
5SL–25338–00–98	E – 5
5VX–25364–00	E – 5
5SL–25366–00	E – 5
5VX–25381–00	E – 6
5SL–25383–00	E – 5
5VX–25388–01	E – 5
2GH–25389–00	E – 6
5MT–25398–00	E – 3

PART NO.	GRID NO.
5MT–25398–00	E – 5
5MT–25398–10	E – 3
	E – 5
5MT–25398–20	E – 3
	E – 5
5VX–25446–00	E – 5
5VX–2580T–00	E – 4
5VX–2580U–00	E – 4
5VX–2580W–00	E – 7
5VX–2581K–00	E – 13
5VX–2581T–00	E – 4
5SL–25827–00	E – 7
5SL–25827–10	E – 7
5SL–25828–00	E – 7
5VX–2582A–00	E – 13
5VX–2582W–00	E – 7
5SL–25838–00	E – 7
5VX–2583V–00	E – 13
5SL–25852–00	E – 13
5VS–25852–00	E – 9
5SL–25854–00	E – 13
5VS–25854–00	E – 9
5SL–25855–00	E – 13
5VS–25855–00	E – 9
4BP–2585F–00	E – 13
3LN–2585G–00	E – 13
5VS–25867–00	E – 9
5VX–25872–00	E – 9
5VX–25875–10	E – 9
5SL–25876–00	E – 9
5VX–2587A–00	E – 11
5SL–25894–00	E – 13
5VX–25895–00	E – 13
5VS–2589F–00	E – 9
5VS–2589H–00	E – 9
5SL–25914–00	E – 7
5JW–25914–10	E – 4
5DH–25916–00	E – 7
3JD–25917–00	E – 7
5SL–25917–00	E – 7
4BP–25919–00	E – 4
5SL–25919–00	E – 7
5VX–25921–50	E – 7
8CR–25924–00	E – 7
5SL–25926–00	E – 7
3YX–25929–00	E – 4
4TT–25937–00	E – 4
5VX–26111–00	E – 8

PART NO.	GRID NO.
4YR–26240–02	E – 8
4YR–26241–02	E – 8
51J–26246–01	E – 8
5VX–26280–00	E – 15
5VX–26290–00	E – 15
5VX–26311–00	E – 8
5VX–26312–00	E – 8
5VS–26332–00	E – 9
5VX–26335–00	E – 8
5VX–27111–03	E – 10
5VX–27113–00	E – 10
371–27114–00	E – 2
4GL–27114–00	E – 10
5VX–27114–00	C – 14
	E – 11
5VX–27115–00	E – 10
5VX–27151–02	E – 10
5VX–27152–02	E – 10
5VX–27200–00	E – 13
5VX–27212–00	E – 13
4BP–27222–01	E – 13
5VX–27311–01	E – 10
5VX–27315–00	E – 10
5VX–27321–02	E – 10
5VX–27351–00	E – 10
3YX–27413–00	E – 10
4XV–27424–00	C – 2
5VX–27424–00	C – 14
	E – 11
3VR–27431–01	E – 11
4BP–27434–01	C – 14
5VX–27437–00	E – 12
3VR–27441–01	E – 11
5VX–27442–10	C – 14
5VX–27443–10	E – 11
5VX–27445–00	C – 14
5VX–27446–00	E – 11
4BH–27451–01	E – 10
4BH–27461–01	E – 11
5VX–28100–00	D – 5
31A–28217–00	D – 4
5VX–2830C–00–P1	E – 14
5VX–2830C–00–P4	E – 14
5VX–2830D–00–P1	E – 14
5VX–2830D–00–P4	E – 14
5VX–28356–00	E – 14
5VX–2835G–00	E – 14
5VX–2835G–10	E – 14

PART NO.	GRID NO.
5VX–2836E–01	E – 15
5VX–2836F–00	E – 15
5VX–2836K–00	E – 14
5VX–2836K–10	E – 14
5VX–2836L–00	E – 15
5VX–2836L–10	E – 15
5VX–28376–00	E – 14
5VX–28381–30	E – 14
5VX–81410–00	F – 2
5VX–81450–00	F – 2
5VX–81670–00	F – 9
5VX–81673–00	F – 9
4WP–81801–00	F – 3
5VX–81815–00	F – 3
4WP–81826–00	F – 3
4XV–8182A–00	F – 3
4WP–81844–00	F – 3
1FK–81847–00	F – 3
5EB–81890–00	F – 3
4BH–81940–01	F – 11
5EA–81950–20	F – 11
5VK–81950–30	F – 11
5EA–81952–00	F – 11
5VX–81960–00	F – 11
4TX–82100–02	F – 11
5VX–82115–00	F – 11
5VX–82116–00	F – 9
5VX–82122–00	D – 2
5VX–82123–00	F – 11
122–82131–00	D – 5
3TJ–82131–00	D – 5
1AE–82151–00	F – 11
5JJ–82151–20	F – 11
5JJ–82151–30	F – 11
5VX–82310–00	F – 9
5VX–82320–00	F – 9
5VX–82370–00	F – 9
5VX–82380–00	B – 13
5VX–82386–00	B – 14
5VX–82501–10	F – 12
4BH–82511–09	F – 12
5VX–82530–00	F – 9
3GB–82540–01	F – 9
5VX–82541–00	F – 9
5VS–82566–60	F – 9
5PS–82576–01	F – 11
5VX–82590–10	F – 11
1UA–82591–00	E – 9

PART NO.	GRID NO.
1UA–82591–00	F – 8
5VX–82910–00	F – 8
3YX–82917–01	F – 8
5PW–83310–10	F – 4
5PW–83318–00	F – 4
5PW–83320–10	F – 4
5VX–83330–10	F – 4
5GJ–83331–00	F – 4
5PW–83331–00	F – 4
5PW–8333A–10	F – 4
5VX–83340–10	F – 4
5PW–8334A–10	F – 4
4VR–83350–00	F – 12
5VX–83371–01	F – 12
4VR–8338V–00	F – 12
5VX–83500–20	F – 5
5VX–83500–30	F – 5
5EB–83755–01	F – 9
5EB–83912–02	F – 8
5JJ–83913–00	F – 8
5VS–83922–00	E – 9
437–83936–01	F – 8
4XV–83945–00	F – 8
5LV–83951–00	F – 8
5VX–83972–00	F – 8
5VX–83975–00	F – 8
4HM–83980–00	E – 9
5VX–84310–20	F – 6
4SV–84314–00	F – 6
8G9–84314–00	F – 6
4SV–84350–00	F – 6
5VX–84359–20	F – 6
5LV–84397–00	F – 6
5VX–84710–10	F – 7
137–84714–60	F – 7
5VX–84735–00	F – 7
4HC–84744–00	F – 7
5VX–84745–00	F – 7
5MT–84751–00	D – 5
11H–85110–01	F – 10
5VX–85112–00	F – 9
3Y6–85130–02	D – 5
5VX–85720–01	F – 9
8CC–85790–01	F – 9
5FL–85885–01	B – 13
5CA–85886–00	B – 12
5VX–8591A–10	F – 12
5VX–8591A–20	F – 12

NUMERICAL INDEX

PART NO.	GRID NO.
5VX–88158–00	D – 4
5VS–W0041–00	E – 9
5VX–W0042–50	E – 13
5VX–W0045–00	E – 4
5VX–W0046–00	E – 7
4FU–W0047–00	E – 4
5SL–W0047–00	E – 7
1UY–W0048–00	E – 7
51L–W0048–00	E – 4
5KS–W0057–00	E – 4
5SL–W0057–00	E – 7
2TV–W2470–00	E – 2
5VS–W2587–00	E – 9
5VX–Y2410–30–02	D – 14
5VX–Y2410–30–07	D – 14
90105–06006	C – 4
90105–06027	B – 2
90105–06053	B – 7
90105–06557	B – 8
	D – 2
	F – 9
90105–07004	B – 6
90105–08386	F – 9
90105–086A9	C – 4
90105–087A0	C – 4
90105–10032	D – 2
90105–10088	E – 10
90105–10090	E – 10
90105–10323	D – 10
90105–10638	E – 4
90105–10N53	D – 2
90105–126A8	F – 2
90109–06031	B – 10
90109–06055	F – 12
90109–06060	D – 2
90109–064G6	E – 4
90109–065G3	C – 4
90109–066F0	B – 2
90109–067F4	D – 3
90109–08045	E – 7
90109–080G5	F – 12
90109–082A1	C – 2
90109–083E2	E – 11
90109–10011	E – 10
90109–10654	D – 10
90110–05014	D – 14
90110–05112	D – 14
90110–05201	E – 14
90110–06018	C – 13
90110–06020	B – 11
90110–06022	C – 6
90110–06041	B – 10
90110–06079	D – 14
90110–06086	B – 7
90110–06091	C – 4
90110–06200	E – 14
90110–08220	E – 11
90110–10010	E – 10
90110–10N52	D – 12
90111–05003	C – 15
	E – 11
90111–05007	E – 11
90111–06016	B – 8
90111–06019	C – 15
90116–10485	E – 5
90119–06038	B – 8
90119–06044	D – 5
	E – 13
90119–06062	D – 14
90119–06096	D – 9
90119–06117	D – 7
	D – 9
90119–08081	E – 14
90119–10003	B – 2
90149–06019	F – 2
90149–06020	C – 4
90149–06250	F – 2
90149–06308	E – 2
90149–08003	F – 2
90149–10006	D – 2
90149–10012	D – 2
90150–04041	D – 5
90150–05023	E – 14
90151–06008	C – 11
90154–05042	F – 5
90154–06061	D – 4
90157–05079	E – 10
90159–06002	C – 9
90164–05014	F – 6
90170–06228	C – 14
90170–08010	E – 13
90170–20008	C – 9
90176–05001	E – 11
90176–22081	D – 11
90179–05523	E – 14
	F – 5
90179–06403	D – 4
90179–08410	C – 2
90179–18667	C – 12
90179–25033	D – 11
90183–05061	D – 4
	F – 7
90183–05074	E – 14
90183–06053	D – 2
	E – 14
90183–060A1	D – 2
90185–10002	D – 2
90185–10009	E – 5
90185–10037	E – 10
90185–18104	D – 9
90185–24165	E – 5
90201–047A2	F – 12
90201–05725	D – 5
90201–06055	D – 3
90201–06057	D – 5
90201–06071	F – 7
90201–06380	F – 5
90201–08083	E – 13
90201–08612	C – 2
90201–086A3	C – 2
90201–086P8	C – 3
90201–08753	F – 9
90201–08784	C – 14
90201–087K3	C – 4
90201–10020	D – 2
90201–10021	E – 5
90201–10118	E – 9
	E – 13
90201–10119	C – 9
90201–101J1	D – 10
90201–12008	F – 2
90201–12013	C – 14
90201–12021	E – 10
90201–12790	F – 9
90201–14215	E – 13
90201–15013	C – 10
90201–154E8	C – 14
90201–177G4	C – 14
90201–186M4	D – 9
90201–20278	C – 12
90201–220T0	D – 11
90201–231E1	D – 12
90201–25015	E – 5
90201–255A6	C – 9
90201–28014	E – 6
90202–06170	E – 14
90202–08205	F – 12
90202–24190	D – 11
90202–26142	D – 11
90206–12074	C – 14
90209–08295	E – 11
90209–21332	C – 11
90209–21351	C – 11
90209–22352	C – 11
90209–25342	C – 11
90209–25349	C – 11
90209–25350	C – 11
90215–20004	C – 9
90215–21290	C – 12
90240–08063	E – 12
90240–08124	E – 13
90269–05049	E – 14
90269–06010	F – 9
90269–08001	D – 9
90269–08066	D – 3
90338–06004	D – 11
90338–06018	E – 2
90338–08174	B – 12
90338–21145	D – 2
90340–14132	B – 11
90340–20090	B – 2
90340–32116	C – 6
90383–14001	E – 11
90387–06068	D – 14
90387–06073	B – 12
90387–06075	D – 5
90387–06078	D – 3
90387–0614M	B – 8
90387–061N6	C – 2
90387–061W6	D – 14
90387–062L2	D – 15
90387–06372	C – 15
	D – 9
90387–064J1	D – 4
	D – 7
	D – 9
90387–065J6	D – 4
90387–066H4	B – 8
90387–082W9	C – 2
90387–09003	D – 4
90387–1012B	D – 10
90387–127V3	C – 14
90387–22002	E – 3
90387–2202V	C – 12
90387–25010	C – 9
90387–2504A	C – 11
90387–2513E	C – 11
90387–253M6	C – 11
90387–28001	E – 5
90387–2813C	C – 11
90387–2813D	C – 11
90401–10159	E – 9
	E – 13
90401–20145	B – 11
90413–08012	B – 14
90430–06014	B – 7
90430–08119	B – 2
90430–08143	C – 6
90430–09002	B – 13
90430–10148	F – 9
90430–10171	D – 12
90445–08018	D – 7
90445–10032	D – 14
90445–10033	D – 14
90445–10034	D – 15
90445–11418	D – 15
90445–11732	D – 15
90445–11795	B – 12
90445–170K9	E – 10
90450–22017	B – 7
	B – 9
90450–32001	B – 7
	B – 9
90450–35001	B – 7
	B – 8
90450–38040	B – 7
90450–53002	B – 12
90450–63003	B – 12
90464–12089	F – 11
90464–13077	F – 11
90464–13249	F – 11
90464–14002	D – 4
90464–14058	F – 11
90464–15157	D – 3
90464–15192	F – 11
90464–16005	D – 14
90464–16006	D – 8
	E – 15
	F – 11
90464–16061	E – 2
90464–18002	D – 4
90464–18029	D – 5
	F – 6
90464–20181	D – 7
90464–54086	E – 14
90465–08045	C – 6
90465–10030	B – 11
90465–10035	C – 6
90465–13152	D – 5
90465–14011	C – 6
90467–08075	D – 7
90467–090A1	E – 13
90467–10008	B – 14
	D – 14
90467–10041	B – 12
90467–11090	B – 9
	B – 14
90467–14015	B – 12
90467–15054	B – 12
90467–17003	B – 15
90467–17089	B – 12
	B – 15
90467–17128	B – 15
90467–200A0	B – 9
90480–01558	D – 7
90480–10332	C – 2
90480–11005	F – 11
90480–12006	C – 2
90480–12072	D – 4
90480–12237	D – 3
90480–12314	B – 12
90480–13163	D – 7
	D – 15
90480–13398	D – 4
90480–14229	E – 14
90480–14585	E – 14
90480–15005	D – 14
90480–15363	B – 8
90480–18276	F – 7
90501–064L1	C – 13
90501–12743	E – 12
90501–225A9	C – 9
90506–14003	C – 14
90506–20223	E – 13
90506–23007	E – 10
90506–26008	E – 10
90506–50001	E – 10
90508–18016	C – 10

PART NO.	GRID NO.
90508–20572	E – 10
90508–295B2	C – 14
90560–06201	D – 7
91314–06020	C – 6
91314–06025	B – 6
	C – 4
	C – 6
91314–06030	C – 6
91314–06060	B – 2
91314–08030	D – 11
91314–08045	D – 13
91314–10050	D – 2
91317–04025	F – 11
91317–05010	D – 14
91317–06016	F – 9
91317–06020	B – 2
	B – 12
91317–06025	B – 11
91317–08030	C – 2
	D – 11
91317–10025	D – 13
91380–06012	F – 9
91401–20012	E – 13
91401–25015	E – 10
91701–08040	E – 10
91808–17032	B – 10
92014–06020	E – 13
92014–08014	C – 6
92014–08020	E – 13
92017–05025	F – 9
92017–06012	D – 5
	D – 8
92017–06014	D – 7
92017–06016	D – 6
92017–06020	D – 3
92017–08045	C – 3
92902–04100	E – 9
92902–04600	E – 9
92907–05100	B – 13
92907–05600	B – 8
	B – 13
92907–06100	B – 8
92907–06600	B – 8
	D – 9
	D – 11
92907–08200	E – 6
92907–08600	C – 9
92990–05200	C – 15

PART NO.	GRID NO.
92990–05200	E – 11
93101–12004	C – 15
93101–12173	B – 7
93102–15212	C – 9
93102–35423	C – 12
93106–28043	E – 3
93106–40013	E – 5
93109–17071	D – 10
93210–04092	C – 4
93210–06667	B – 10
93210–09165	B – 10
	C – 5
93210–14003	B – 10
93210–14579	C – 4
93210–15566	B – 11
93210–16325	C – 4
93210–27194	C – 6
93210–32172	C – 6
93210–33133	B – 7
93210–34504	D – 12
93210–47675	B – 7
93306–00106	B – 7
93306–00304	C – 9
93306–00420	E – 3
93306–20464	C – 11
93306–20531	E – 5
93306–30525	C – 11
93306–30546	C – 11
93310–340N8	C – 9
93315–31502	C – 9
93315–31758	D – 10
93315–42523	D – 9
93317–11020	C – 9
93317–11287	C – 15
93317–43580	E – 5
93399–99931	D – 11
93399–99932	D – 13
93420–61M07	E – 5
93440–10153	B – 2
93440–25186	C – 11
93440–28062	C – 11
93450–17129	B – 3
93501–04011	E – 12
93607–44190	B – 6
93608–17263	C – 6
93900–00030	E – 3
	E – 5
94112–17066	E – 3

PART NO.	GRID NO.
94112–17067	E – 3
94118–17041	E – 5
94118–17053	E – 5
94580–25080	B – 10
94582–11118	E – 5
94591–49120	B – 6
94701–00403	B – 2
95024–06020	B – 7
95024–06025	D – 4
95024–10020	B – 9
95027–06008	F – 11
95027–06012	D – 3
	D – 7
95027–06016	F – 9
95027–06020	F – 8
95027–06025	E – 9
95027–06030	E – 9
95027–06040	F – 3
95027–08012	B – 2
95304–06700	C – 14
95307–08600	E – 6
95607–04100	D – 5
95607–05100	C – 15
	D – 5
	E – 11
95607–05200	F – 9
95607–06100	D – 5
	F – 8
95607–10100	D – 10
95607–10200	D – 2
	D – 10
95617–06100	E – 9
95617–08625	B – 2
95707–05500	D – 5
	F – 10
95707–06500	E – 2
	E – 15
	F – 11
95707–10500	E – 10
95807–06010	E – 9
	F – 12
95807–06012	D – 11
95807–06016	D – 7
	D – 15
95807–06020	F – 11
95807–06025	D – 2
95814–08045	C – 2
95817–06045	C – 4

PART NO.	GRID NO.
95817–06055	C – 4
95817–06065	C – 4
95817–06100	C – 4
95817–08014	C – 2
95817–08035	C – 2
95817–08065	C – 4
95824–06012	B – 9
95824–06020	C – 14
95824–06030	B – 8
95827–06010	D – 8
95827–06090	D – 14
95827–08012	D – 5
95827–08025	D – 4
97007–05012	B – 8
97007–06016	D – 11
97007–06025	D – 9
97307–06012	B – 8
97607–05255	F – 8
97706–04012	F – 4
	F – 7
97707–40012	D – 5
97707–50012	D – 4
97707–50016	E – 14
	F – 5
	F – 6
97707–50025	B – 12
97707–60016	F – 7
98502–04012	E – 9
98507–04010	F – 8
98507–05010	B – 13
98507–05016	B – 13
98507–05020	F – 8
98507–05030	F – 8
98507–05045	F – 8
98507–06008	E – 11
98507–06012	B – 13
	C – 6
98704–03020	F – 8
98907–05008	D – 14
98907–05012	D – 4
98907–05014	F – 7
98907–06012	D – 4
98907–06020	C – 2
99001–07600	C – 9
99009–10400	C – 9
99009–12400	B – 7
99009–17400	C – 14
99530–08012	B – 11

PART NO.	GRID NO.
99530–08012	C – 6
99530–10014	C – 4
99530–10114	B – 2

PART NO.	GRID NO.