YAMAHA

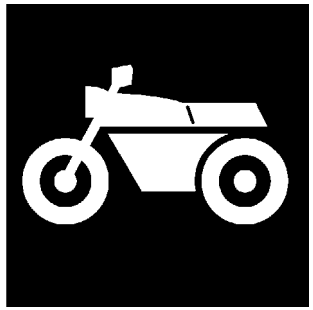

CATALOGO DE REPUESTOS

FZ8-N (39P1) EUROPE

1K39P-352S1

( )

YAMAHA GENUINE Parts & Accessories

FZ8-N
CATALOGO DE REPUESTOS
©2010 por Yamaha Motor Co., Ltd.
1ª edición, marzo 2010
Todos los derechos reservados.
Toda reproducción o uso no autorizado
sin el consentimiento escrito de
Yamaha Motor Co., Ltd.
quedan expresamente prohibidos
Impreso en Japón.

PROLOGO

Este catálogo de repuestos corresponde a las piezas para el o los modelos que figuran en la página de portada. Al formular el pedido de repuestos, se ruega citar este catálogo y especificar correctamente el número y el nombre de las piezas.

1. Las modificaciones y agregados que se hayan realizado después de la edición de este Catálogo de Repuestos, serán anunciados en las Informaciones de Recambios.
   Es recomendable que se hagan las correcciones necesarias en el Catálogo de Repuestos de acuerdo con las Informaciones de Recambios.

2. Abreviaciones
   En este. Catálogo de Repuestos se emplean las siguientes abreviaciones.

   "UR" Usar el número de partes especificado
   "UN" Usar la cantidad necesaria
   "AP" Piezas sustitutivas
   "LM" Fabricación local (Hay que pedir los repuestos en las cercanías)
   "F#" Nº de bastidor (Nº aplicable a la máquina)
   "O/S" Sobredimensionado

3. La cantidad de componentes para el montaje
   - Los componentes, suministrados como conjunto, se describen con un punto (.) que precede al nombre del parte como se indica a continuación.
   - La numeración que aparece a la derecha de cada descripción indica la cantidad de partes por cada unidad de conjunto.

CODIGO Nº	DESCRIPCION	CANT.	OBSERVACIONES
2F5–83310–60	ENSAMBLAJE DE LA LUZ	2	
115–83311–60	.BOMBILLA (6V–18W)	1	

4. Los colores de los componentes se indican como sigue en la columna de "OBSERVACIONES".

CODIGO Nº	DESCRIPCION	CANT.	OBSERVACIONES
2N4–24110–00–X5	COMP. DEL TANQUE	2	MXR
3J1–24240–10	.GRAFICO, DEL TANQUE	1	PARA MXR

5. Debe tenerse en cuenta que las ilustraciones sirven como guia para la búsqueda de los números de partes y no deben usarse para el montaje. Durante el montaje, se recomienda usar el manual de taller correspondiente.

6. EL asterisco (*) antes del número de referencia indica los elementos modificados después de la primera edición.

7. Números de serie

Nº de Serie del motor

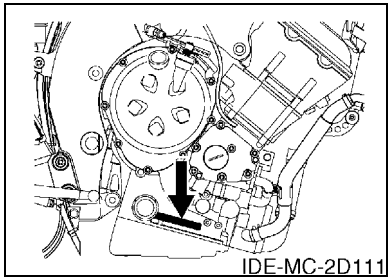

Nº de Serie del bastidor

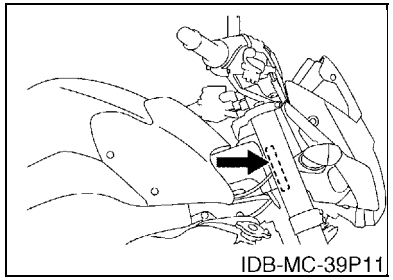

8. Códigos de color aplicables (El símbolo (*) muestra el color de modelo.)

Abreviatura	Nombre de color	Código de color
BWC1(*)	BLUISH WHITE COCKTAIL 1	0390
DPBMC(*)	DEEP PURPLISH BLUE METALLIC C	0564
LGB	LOW GLOSS BLACK	0098
MBL2	MAT BLACK 2	0582
NG	NEBURA GOLD	008L
SMX(*)	BLACK METALLIC X	0903

ROTULO DE MODELO

(1) El rótulo llamada “Rótulo de Modelo” está en la ubicación indicada abajo en el (3). Cuando se utilice este catálogo de repuestos, se ruega cotejar entre el “código de modelo–número de código de producción” del catálogo y el “código de modelo–número de código de producción” indicado en el Rótulo de Modelo fijado en el producto correspondiente.

(2) Indicación del “Rótulo de Modelo”

a b ○ xxxx – xxx ● x c	a: Código de tipo de Modelo b: Número de código de Producción c: Tipo de color

○ 4TW1–010 ● A

(3) Ubicación de fijación del Rótulo de Modelo

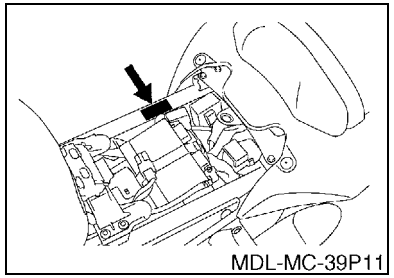

(4) Información de Color

Código de Modelo	Código de tipo de color	Código de color	Nombre de color	Abreviatura
39P1	A	0903	BLACK METALLIC X	SMX
	B	0390	BLUISH WHITE COCKTAIL 1	BWC1
	C	0564	DEEP PURPLISH BLUE METALLIC C	DPBMC

(5) Código de Modelo–Número de código de Producción del Modelo Listado en este Catálogo de Repuestos

Código de Modelo	Número de Código de Producción	País (destino)
39P1	010	SPAIN

CONTENIDO

MOTOR

CULATA DE CILINDRO 1
CILINDRO 3
CIGUENAL & PISTON 4
VALVULA 5
ARBOL DE LEVAS & CADENA 7
BOMBA DE AGUA 8
RADIADOR & MANGUERA 10
BOMBA DE ACEITE 12
FILTRO ACEITE 13
ADMISION 14
ADMISION 2 16
SYSTEMA DE INDUCCION DE AIRE 18
DESCARGA 19
CARTER 20
CUBIERTA DE CARTER 1 21
ARRANQUE 23
EMBRAGUE 24
TRANSMISION 26
LEVA DE CAMBIO & HORQUILLA 28
EJE DE CAMBIO & PEDAL 29

SHASIS

CUADRO 30
GUARDABARRO 32
CUBIERTA LATERAL 34
BRAZO TRASERO 35
SUSPENSION TRASERO 37
DIRECCION 38
HORQUILLA DELANTERA 39
DEPOSITO DE COMBUSTIBLE 41
ASIENTO 43
RUEDA DELANTERA 44
CALIBRE FRENO DELANTERA 45
RUEDA TRASERA 46
CALIBRE FRENO TRASERA 48
MANILLAR & CABLE 49
CILINDRO MAESTRO DELANTERO 50
SOPORTE & APOYAPIE 51
CILINDRO MAESTRO TRASERO 54
GENERADOR 55
MOTOR DE ARRANQUE 56
LUZ DE DESTELLADOR 57
MEDIDOR 58
FARO DELANTERO 59
LUZ DE COLA 61
INTERRUPTOR DE MANILLAR&PALANC 62
EQUIPO ELECTRICO 1 63
EQUIPO ELECTRICO 2 65

INDICE

INDICE NUMERICO 67

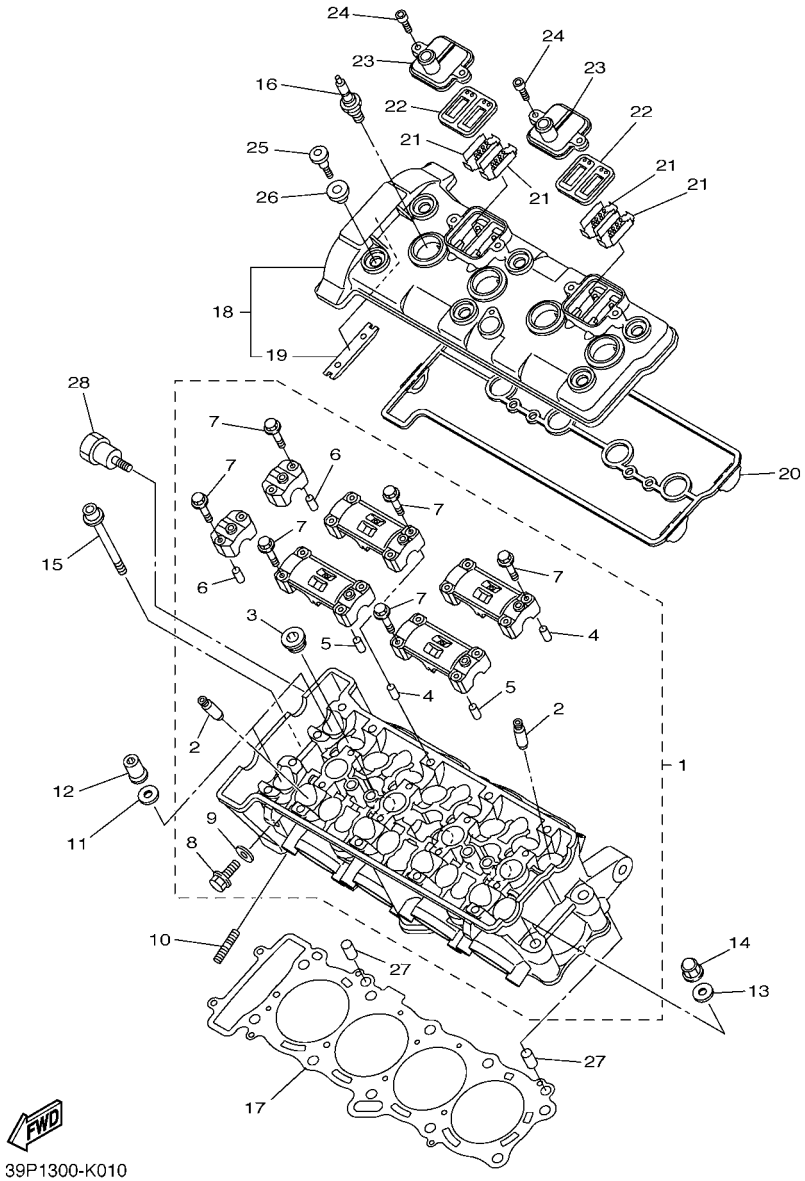

FIG. 1 CULATA DE CILINDRO

REF. Nº	CODIGO Nº	DESCRIPCION	39P1					OBSERVACIONES
1	39P–11101–09	CULATA DE CILINDRO COMPLETA	1					
2	20S–11134–10	.GUIA DE VALVULA 2	16					
3	90340–18002	.TORNILLO, DE DRENAJE	3					
4	91808–16023	.PASADOR DE CLAVIJA	4					
5	91808–16023	.PASADOR DE CLAVIJA	4					
6	91808–16023	.PASADOR DE CLAVIJA	4					
7	90105–06027	.TORNILLO	20					
8	95024–06012	.PERNO, BRIDA	1					
9	90430–06014	.JUNTA	1					
10	90116–08087	ESPARRAGO	8					
11	90201–10050	ARANDELA PLANA	8					
12	90179–10029	TUERCA	8					
13	90201–10050	ARANDELA PLANA	2					
14	90176–10075	TUERCA CORONA	2					
15	90110–06212	TORNILLO ALLEN	2					
16	94701–00318	BUJIA (NGK R CR9E)	4					
17	39P–11181–00	JUNTA, DE CULATA 1	1					
18	4C8–11191–00	TAPA CULATA DE CILINDRO 1	1					
19	5BE–12241–00	.TOPE DE GUIA 2	1					
20	4C8–11193–00	EMPAQUE	1					
21	5VY–1482K–00	PLACA	4					
22	5SL–14890–10	VALVULA DE LENGUETA COMPLETA	2					
23	5VY–14899–00	TAPA, DE CAJA	2					
24	90110–06175	TORNILLO ALLEN	4					
25	90109–066F0	PERNO	6					
26	5VY–1111G–00	CASQUILLO DE GOMA	6					
27	99530–10114	PASADOR, DE ESPIGA	2					

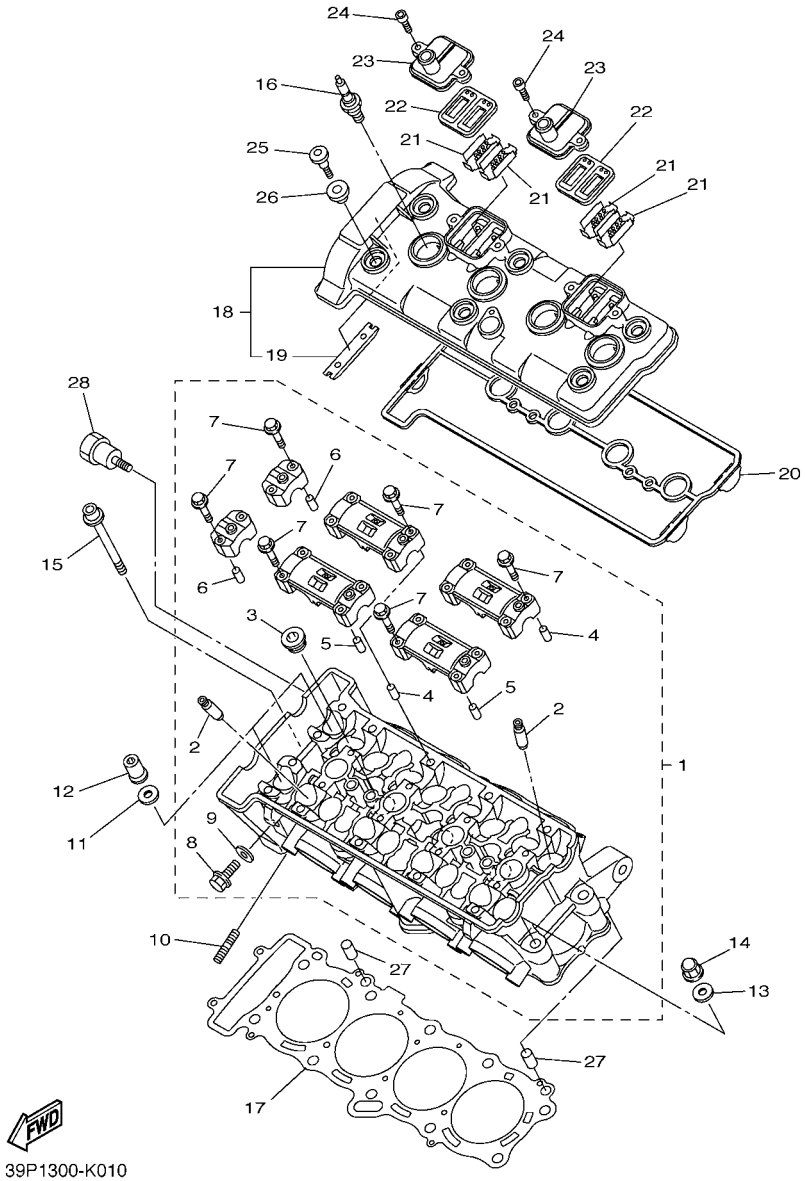

FIG. 1 CULATA DE CILINDRO

REF. Nº	CODIGO Nº	DESCRIPCION	39P1					OBSERVACIONES
28	2D1–11026–00	PERNO	1					

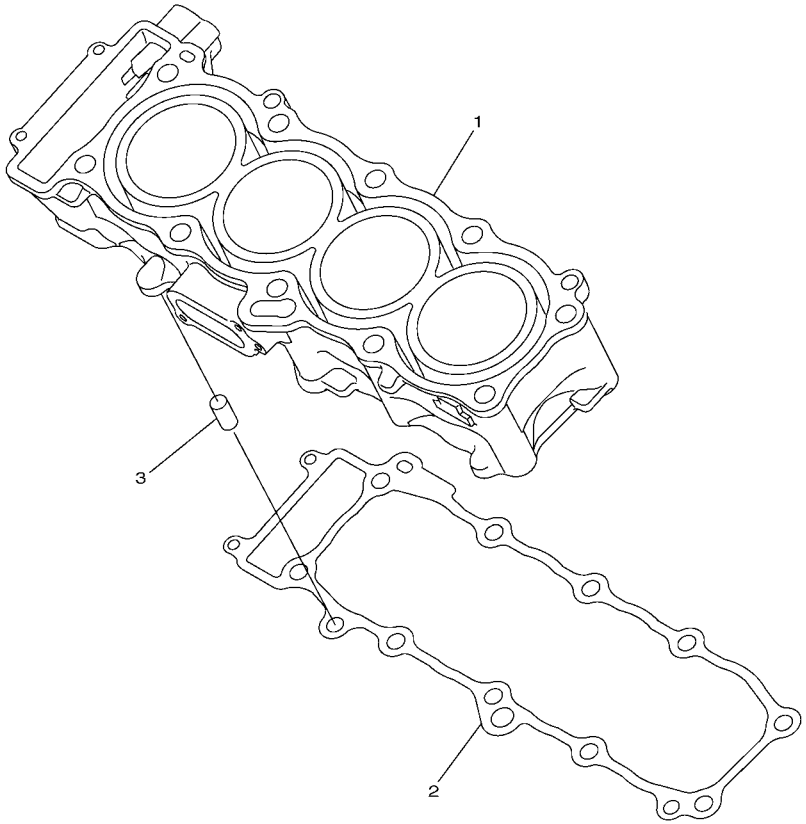

39P1300-K020

FIG. 2 CILINDRO

REF. Nº	CODIGO Nº	DESCRIPCION	39P1					OBSERVACIONES
1	39P–11311–00	CILINDRO 1	1					
2	5VY–11351–00	JUNTA, DE CILINDRO	1					
3	99530–10114	PASADOR, DE ESPIGA	2					

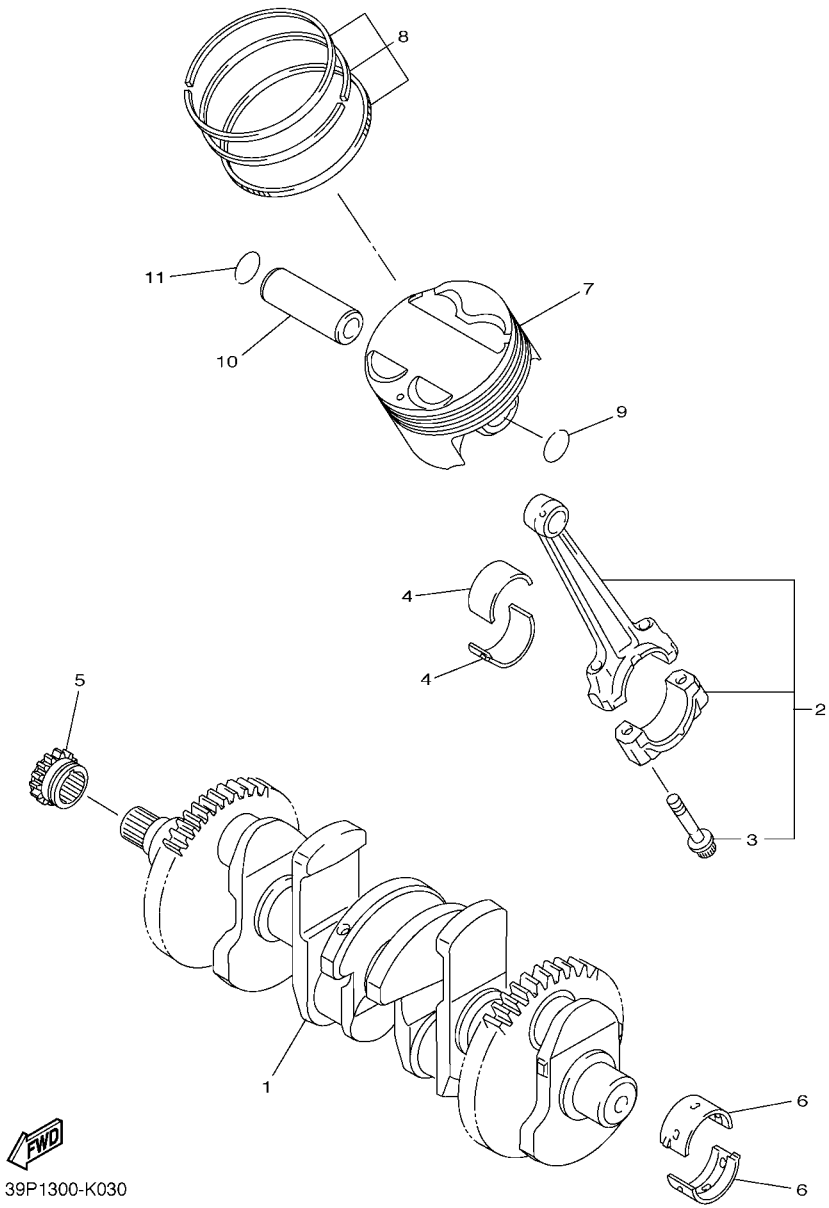

FIG. 3 CIGUENAL & PISTON

REF. Nº	CODIGO Nº	DESCRIPCION	39P1					OBSERVACIONES
1	4C8–11411–00	CIGUENAL	1					
2	14B–11650–00	BIELA COMPLETA	4					
3	5VY–11654–01	.TORNILLO DE BIELA	2					
4	2D1–11656–00	COJINETE PLANO	8					UR AZUL
	2D1–11656–10	COJINETE PLANO	8					UR NEGRO
	2D1–11656–20	COJINETE PLANO	8					UR MARRON
	2D1–11656–30	COJINETE PLANO	8					UR VERDE
5	39P–11549–00	CATALINA CADENA DE LEVA	1					
6	5VY–11416–A0	COJINETE PLANO 1	10					UR BLANCO
	5VY–11416–00	COJINETE PLANO 1	10					UR AZUL
	5VY–11416–10	COJINETE PLANO 1	10					UR NEGRO
	5VY–11416–20	COJINETE PLANO 1	10					UR MARRON
	5VY–11416–30	COJINETE PLANO 1	10					UR VERDE
7	39P–11631–00	PISTON (NORMA)	4					
8	39P–11603–00	JUEGO DE ANILLOS (NORMA)	4					
9	93450–18157	SEGURO	4					
10	39P–11633–00	PASADOR, PISTON	4					
11	93450–18157	SEGURO	4					

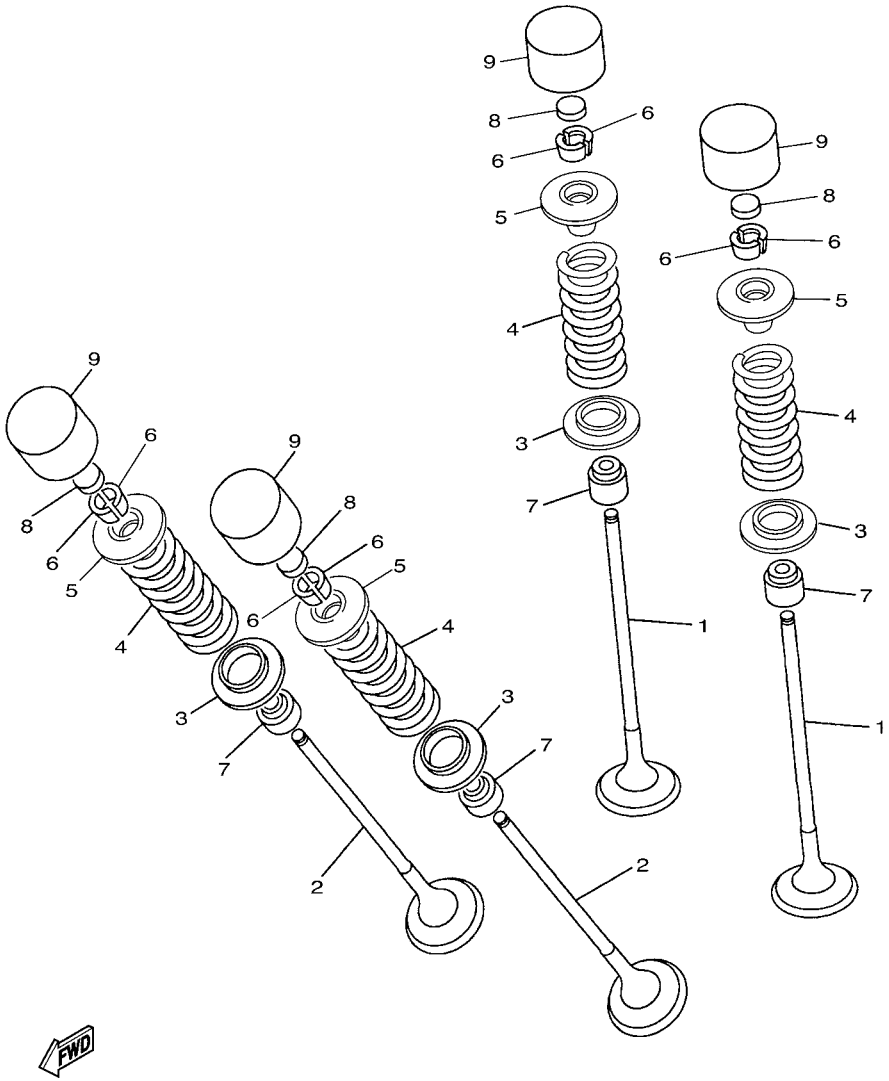

FIG. 4 VALVULA

REF. Nº	CODIGO Nº	DESCRIPCION	39P1					OBSERVACIONES
1	39P–12111–00	VALVULA DE ADMISION	8					
2	39P–12121–00	VALVULA DE ESCAPE	8					
3	5EB–12126–00	ASIENTO RESORTE DE VALVULA2	16					
4	39P–12113–00	RESORTE VALVULA INTERNA	16					
5	5EB–12127–00	RETEN RESORTE DE VALVULA	16					
6	1HX–12118–00	SEGURO DE VALVULA	32					
7	39P–12119–00	SELLO DE ACEITE VALVULA	16					
8	1HX–12168–00	COJIN, AJUSTADOR 2 (1.20)	16					UR
	1HX–12168–20	COJIN, AJUSTADOR 2 (1.25)	16					UR
	1HX–12168–40	COJIN, AJUSTADOR 2 (1.30)	16					UR
	1HX–12168–60	COJIN, AJUSTADOR 2 (1.35)	16					UR
	1HX–12168–80	COJIN, AJUSTADOR 2 (1.40)	16					UR
	1HX–12168–A0	COJIN, AJUSTADOR 2 (1.45)	16					UR
	1HX–12168–F0	COJIN, AJUSTADOR 2 (1.50)	16					UR
	1HX–12168–H1	COJIN, AJUSTADOR 2 (1.55)	16					UR
	1HX–12168–K1	COJIN, AJUSTADOR 2 (1.60)	16					UR
	1HX–12168–M1	COJIN, AJUSTADOR 2 (1.65)	16					UR
	1HX–12168–R1	COJIN, AJUSTADOR 2 (1.70)	16					UR
	1HX–12168–U1	COJIN, AJUSTADOR 2 (1.75)	16					UR
	1HX–12168–W1	COJIN, AJUSTADOR 2 (1.80)	16					UR
	1HX–12168–Y1	COJIN, AJUSTADOR 2 (1.85)	16					UR
	1HX–12169–11	COJIN, AJUSTADOR 2 (1.90)	16					UR
	1HX–12169–31	COJIN, AJUSTADOR 2 (1.95)	16					UR
	1HX–12169–50	COJIN, AJUSTADOR 2 (2.00)	16					UR
	1HX–12169–70	COJIN, AJUSTADOR 2 (2.05)	16					UR
	1HX–12169–90	COJIN, AJUSTADOR 2 (2.10)	16					UR
	1HX–12169–E0	COJIN, AJUSTADOR 2 (2.15)	16					UR

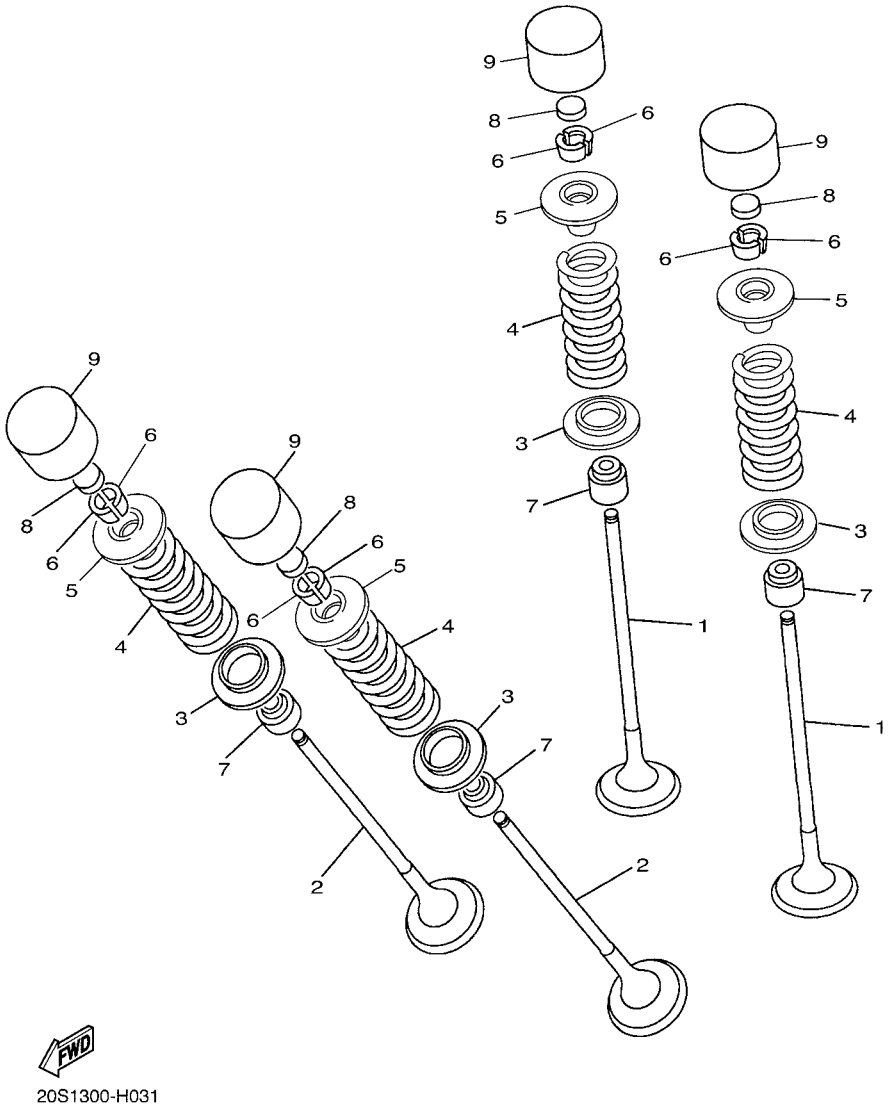

FIG. 4 VALVULA

REF. Nº	CODIGO Nº	DESCRIPCION	39P1					OBSERVACIONES
8	1HX–12169–G0	COJIN, AJUSTADOR 2 (2.20)	16					UR
	1HX–12169–J0	COJIN, AJUSTADOR 2 (2.25)	16					UR
	1HX–12169–L0	COJIN, AJUSTADOR 2 (2.30)	16					UR
	1HX–12169–N0	COJIN, AJUSTADOR 2 (2.35)	16					UR
	1HX–12169–T0	COJIN, AJUSTADOR 2 (2.40)	16					UR
9	5EB–12153–10	LEVANTADOR DE VALVULA	16					UR AMARILLO
	5EB–12153–09	LEVANTADOR DE VALVULA (O/S)	16					AP VERDE

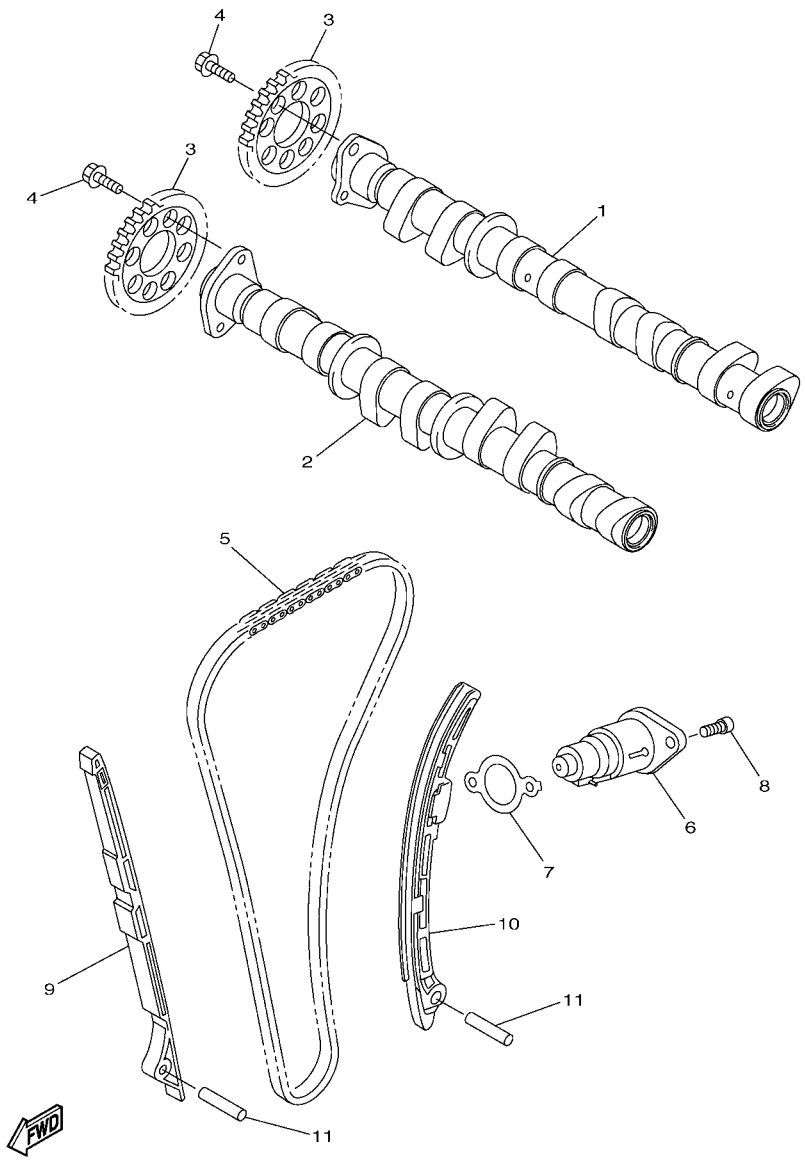

39P1300-K050

FIG. 5 ARBOL DE LEVAS & CADENA

REF. Nº	CODIGO Nº	DESCRIPCION	39P1					OBSERVACIONES
1	39P–12170–00	ARBOL DE LEVAS COMPLETO 1	1					
2	39P–12180–00	ARBOL DE LEVAS COMPLETO 2	1					
3	20S–12176–00	CATALINA DE CADENA	2					
4	90105–07004	TORNILLO	4					
5	94591–68124	CADENA	1					
6	39P–12210–00	TENSOR CADENA DE LEVA	1					
7	2D1–12213–00	EMPAQUE DE CAJA TENSOR	1					
8	90110–06253	TORNILLO ALLEN	2					
9	4C8–12251–00	AMORTIGUADOR CADENA 1	1					
10	4C8–12252–00	AMORTIGUADOR CADENA 2	1					
11	93607–44002	PASADOR DE CLAVIJA	2					

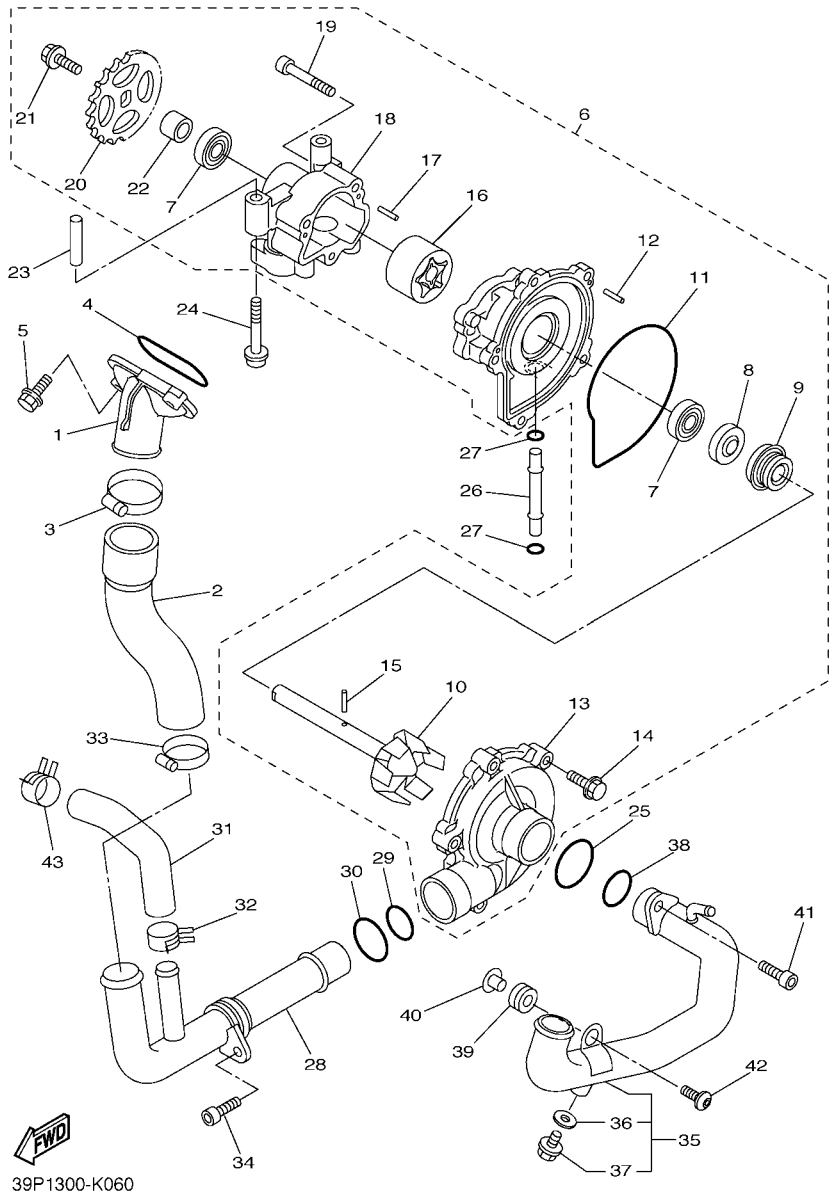

FIG. 6 BOMBA DE AGUA

REF. Nº	CODIGO Nº	DESCRIPCION	39P1					OBSERVACIONES
1	14B–12469–10	CONDUCTO	1					
2	39P–12576–00	MANGUERA 1	1					
3	90450–38040	BRIDA, MANGUERA	1					
4	93210–46044	ANILLO O	1					
5	95024–06025	PERNO, BRIDA	2					
6	4C8–12420–00	BOMBA DE AGUA COMPLETA	1					
7	93306–00106	.COJINETE	2					
8	93102–12372	.SELLO ACEITE	1					
9	4C8–12438–00	.SELLO MECANICO	1					
10	5VY–12450–11	.EJE IMPULSOR COMPLETO	1					
11	4XV–12439–00	.ANILLO O	1					
12	93603–12007	.PASADOR DE CLAVIJA	2					
13	5VY–12422–00	.CUBIERTA DE CAJA	1					
14	90105–06065	.TORNILLO	5					
15	93603–17070	.PASADOR DE CLAVIJA	1					
16	5VY–13310–10	.ROTOR COMPLETO 1	1					
17	93603–12007	.PASADOR DE CLAVIJA	2					
18	5VY–13336–00	.CAJA DE ROTOR	1					
19	91312–06040	.TORNILLO	3					
20	5VY–13355–00	.CATALINA IMPULSADA	1					
21	90105–06066	.TORNILLO	1					
22	5VY–12456–10	.ARANDELA	1					
23	91808–30031	PASADOR DE CLAVIJA	1					
24	90110–06167	TORNILLO ALLEN	2					
25	93210–357A2	ANILLO O	1					
26	4XV–12485–00	TUBO 5	1					
27	93210–06667	ANILLO O	2					

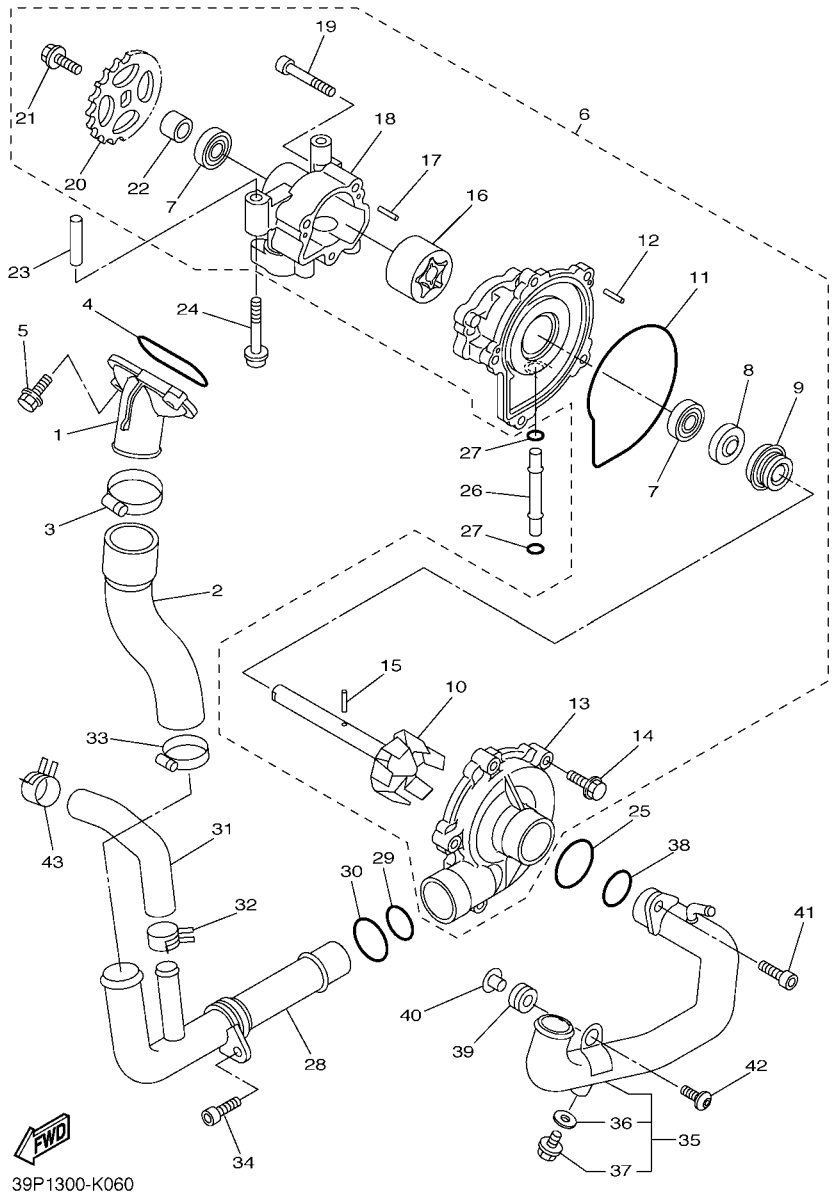

FIG. 6 BOMBA DE AGUA

REF. Nº	CODIGO Nº	DESCRIPCION	39P1					OBSERVACIONES
28	39P–12481–00	TUBO 1	1					
29	93210–235A1	ANILLO O	1					
30	93210–27370	ANILLO O	1					
31	5VY–12588–00	MANGUERA 5	1					
32	90467–200A0	PRESILLA	1					
33	90450–32006	BRIDA, MANGUERA	1					
34	90110–06161	TORNILLO ALLEN	1					
35	2D1–12484–01	TUBO 4	1					
36	90430–06014	.JUNTA	1					
37	90153–06002	.TORNILLO HEXAGONAL	1					
38	93210–235A1	ANILLO O	1					
39	90480–12010	TAPON	1					
40	90387–06112	ESPACIADOR	1					
41	90110–06161	TORNILLO ALLEN	1					
42	90149–06022	TORNILLO DE REGLAJE	1					
43	90467–200A0	PRESILLA	1					

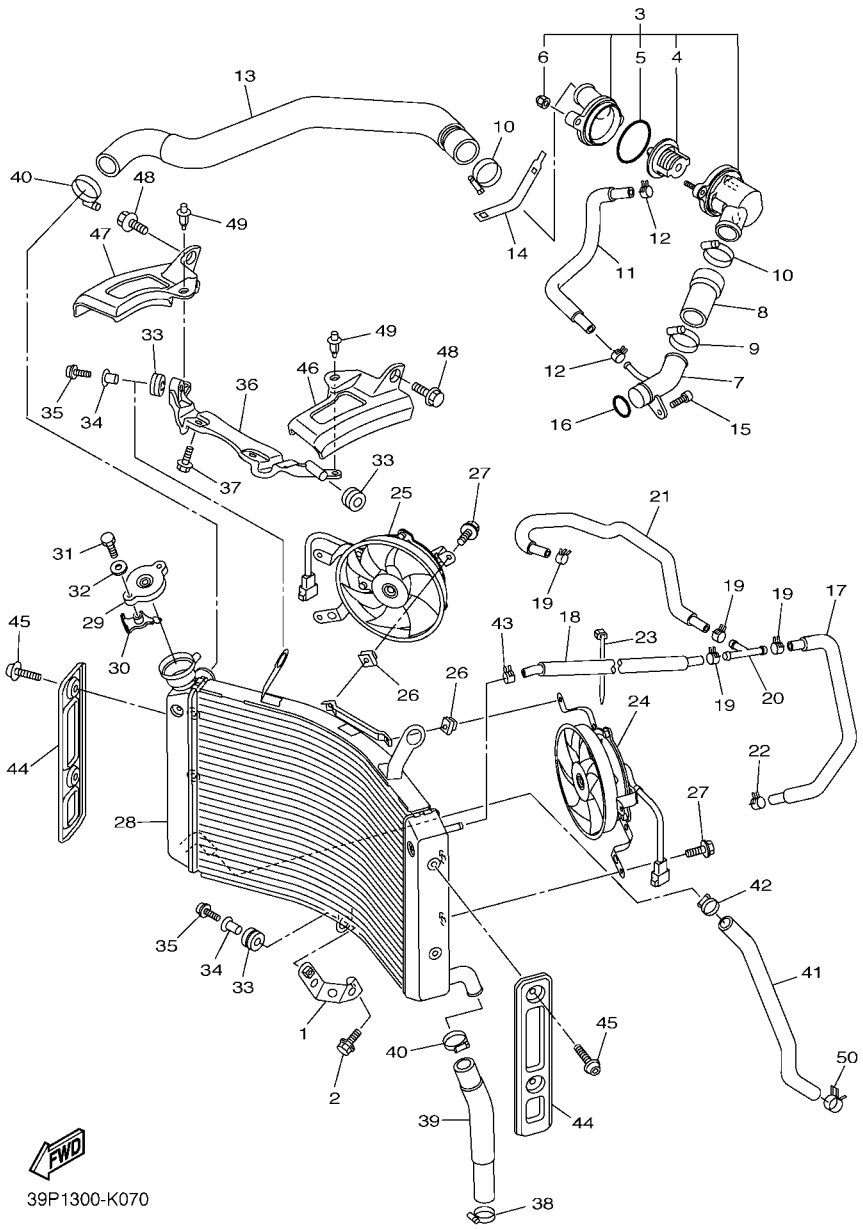

FIG. 7 RADIADOR & MANGUERA

REF. Nº	CODIGO Nº	DESCRIPCION	39P1					OBSERVACIONES
1	39P–12637–00	SOPORTE 1	1					
2	95024–06012	PERNO, BRIDA	1					
3	2D1–12410–00	TERMOSTATO CONJUNTO	1					
4	5LP–12411–00	.TERMOSTAT	1					
5	93210–49046	.ANILLO O	1					
6	90176–06014	.TUERCA CORONA	2					
7	5VY–12485–10	TUBO 5	1					
8	5VY–12579–00	MANGUERA 4	1					
9	90450–35001	BRIDA, MANGUERA	1					
10	90450–38040	BRIDA, MANGUERA	2					
11	39P–1243F–00	MANGUERA 3	1					
12	90467–11090	PRESILLA	2					
13	39P–12578–00	MANGUERA 3	1					
14	5GV–1246A–00	CUBIERTA 1	1					
15	90110–06161	TORNILLO ALLEN	1					
16	93210–235A1	ANILLO O	1					
17	5VY–1243A–00	TUBO 1	1					
18	2D1–1244G–00	MANGUERA 4	1					
19	90467–11090	PRESILLA	4					
20	90413–07023	UNION	1					
21	39P–1243E–00	TUBO 2	1					
22	90467–10039	PRESILLA	1					
23	90464–13073	BRIDA	1					
24	2D1–12405–01	COMPRESOR	1					
25	39P–12405–10	COMPRESOR	1					
26	1AA–12535–00	EMPAQUETADURA	2					
27	2D1–12675–00	PERNO, SUJECION VENTILADOR	6					

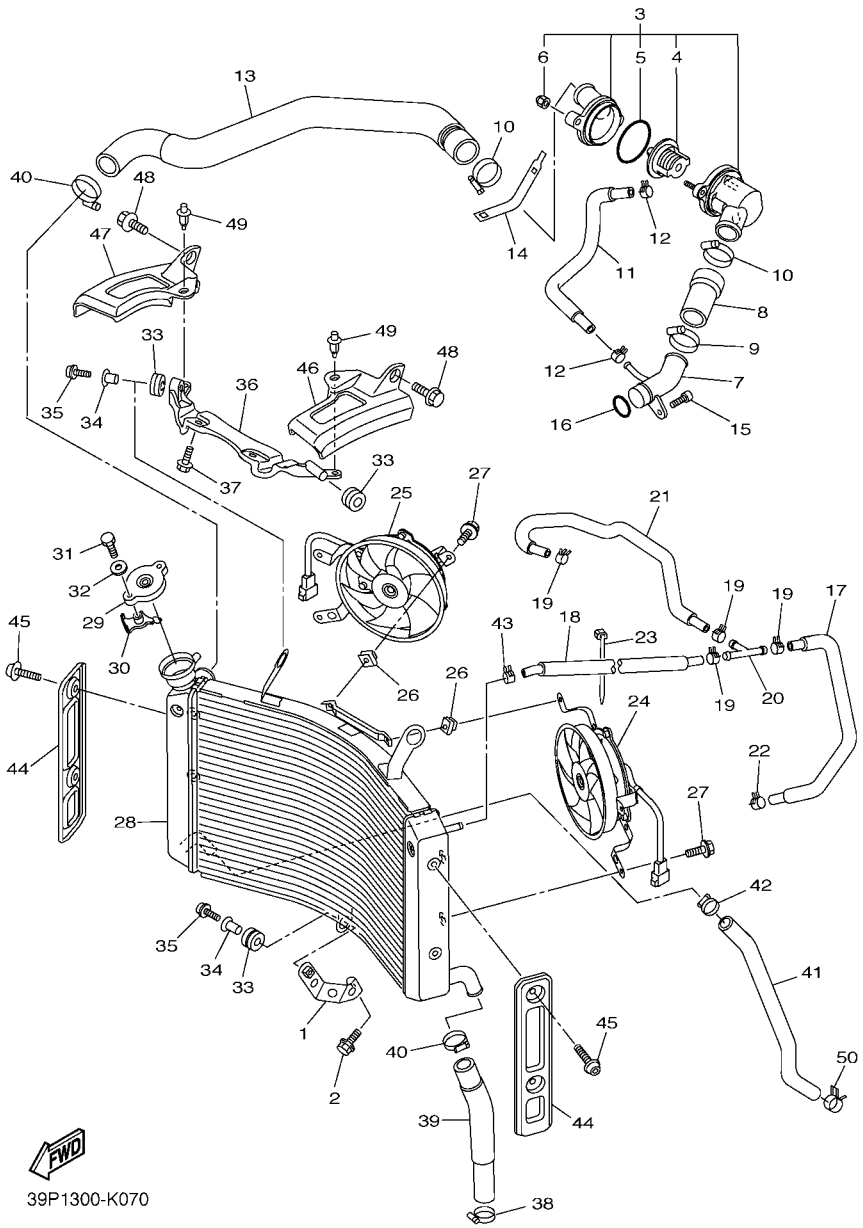

FIG. 7 RADIADOR & MANGUERA

REF. Nº	CODIGO Nº	DESCRIPCION	39P1					OBSERVACIONES
28	2D1–12461–00	RADIADOR COMPLETO	1					
29	4FL–12462–00	TAPON, DEL RADIADOR	1					
30	5FC–12437–00	TOPE	1					
31	97007–05012	PERNO	1					
32	92907–05600	ARANDELA	1					
33	90480–15363	TAPON	3					
34	90387–07391	ESPACIADOR	2					
35	90110–06172	TORNILLO ALLEN	2					
36	39P–12464–00	APOYO DE RADIADOR	1					
37	95802–06016	TORNILLO DE REBORDE	2					
38	90450–32001	BRIDA, MANGUERA	1					
39	2D1–12551–00	MANGUERA 7	1					
40	90450–32001	BRIDA, MANGUERA	2					
41	39P–12589–00	MANGUERA 6	1					
42	90450–22017	BRIDA, MANGUERA	1					
43	90467–11090	PRESILLA	1					
44	39P–1240J–00	CUBIERTA DE RADIADOR COMPLETO	2					
45	90111–06079	TORNILLO	4					
46	39P–1246A–00	CUBIERTA 1	1					
47	39P–1246E–00	CUBIERTA 2	1					
48	95022–06014	PERNO, DE BRIDA	2					
49	90269–06001	REMACHE	2					
50	90467–200A0	PRESILLA	1					

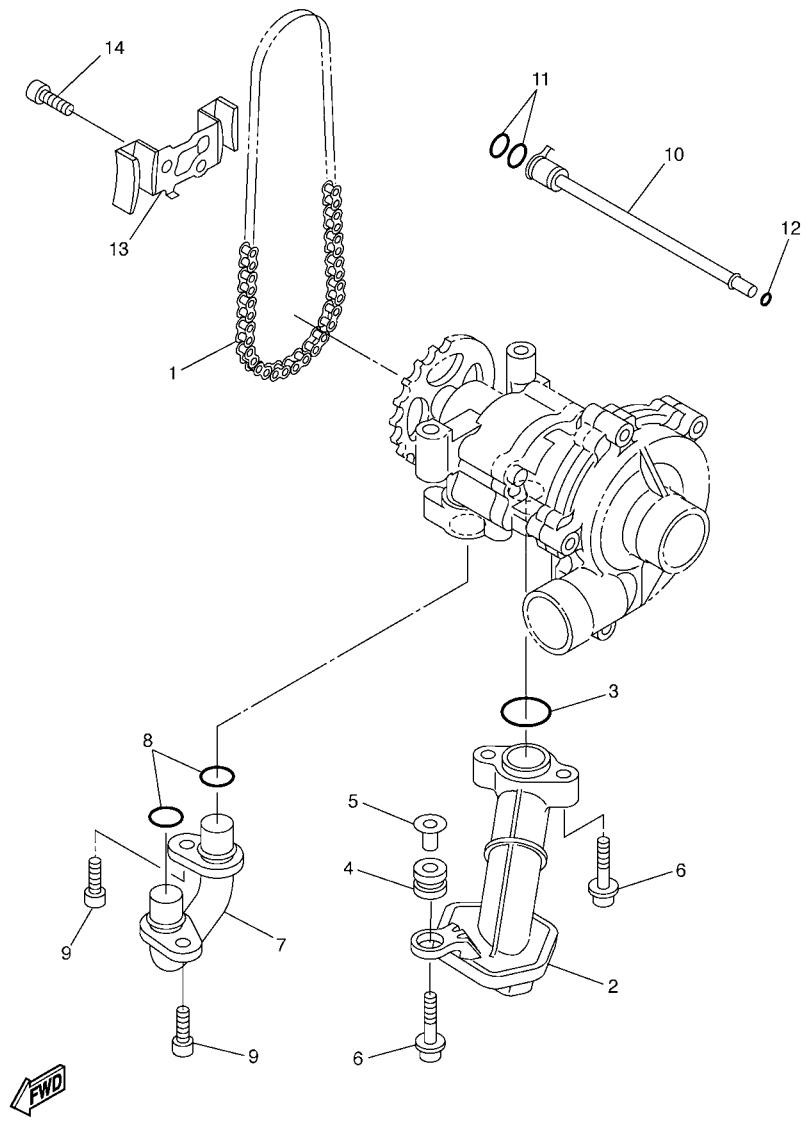

5VY1300-C080

FIG. 8 BOMBA DE ACEITE

REF. Nº	CODIGO Nº	DESCRIPCION	39P1					OBSERVACIONES
1	94580–25078	CADENA (DID25 78LE)	1					
2	5VY–13410–00	CAJA DE FILTRO COMPLETA	1					
3	93210–22298	ANILLO O	1					
4	90480–13010	TAPON	1					
5	5VY–13117–10	COLLAR, DISTANCIA	1					
6	90110–06173	TORNILLO ALLEN	3					
7	5VY–13416–00	TUBO DE ACEITE 1	1					
8	93210–14003	ANILLO O	2					
9	90110–06161	TORNILLO ALLEN	2					
10	5VY–1316E–00	TUBO, DE ENTREGA 5	1					
11	93210–09165	ANILLO O	2					
12	93210–06667	ANILLO O	1					
13	5VY–13898–00	SOSTEN	1					
14	90110–06182	TORNILLO ALLEN	2					

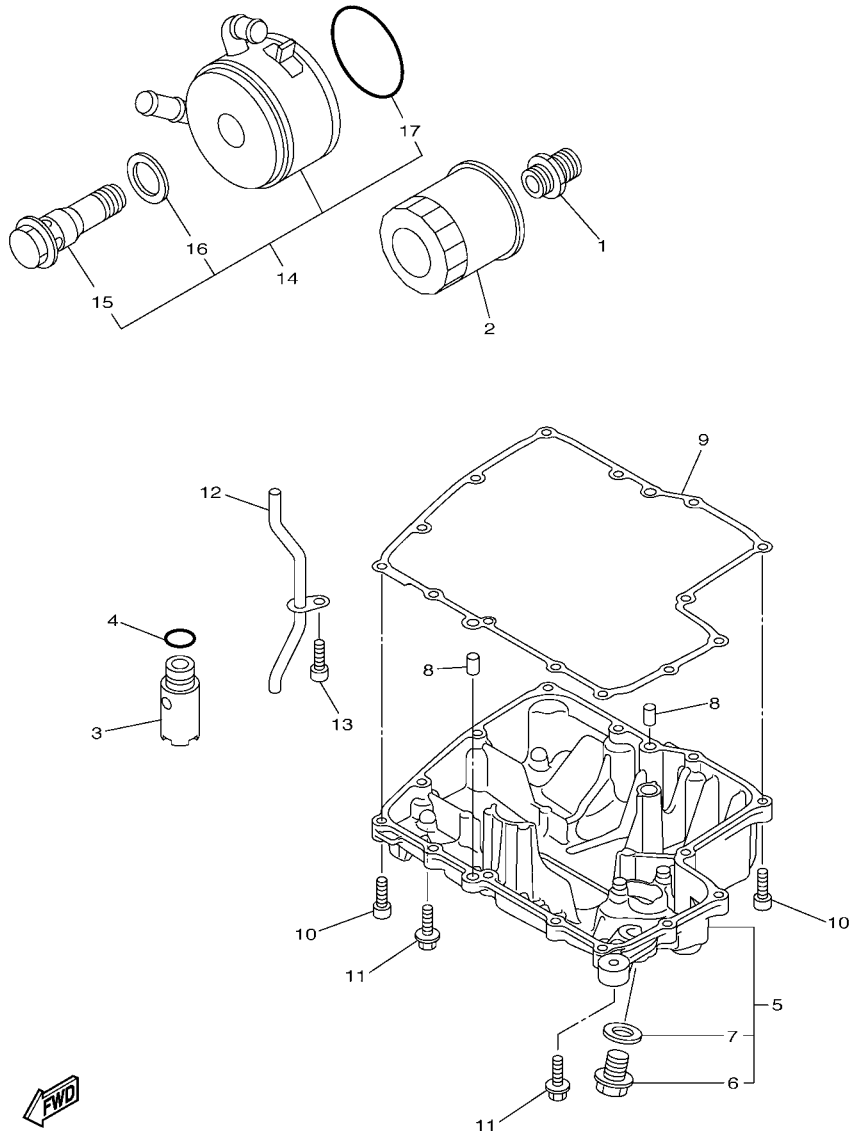

FIG. 9 FILTRO ACEITE

REF. Nº	CODIGO Nº	DESCRIPCION	39P1					OBSERVACIONES
1	90401–20145	PERNO DE UNION	1					
2	5GH–13440–20	ELEMENTO FILTRO DE ACEITE	1					
3	5VY–13490–00	VALVELA DE DESCOMPRESION	1					
4	93210–15566	ANILLO O	1					
5	39P–13400–00	CUBIERTA DE FILTRO COMPLETO	1					
6	90340–14132	.TORNILLO, DE DRENAJE	1					
7	214–11198–01	.EMPAQUE	1					
8	99530–08012	PASADOR, DE ESPIGA	2					
9	4C8–13414–00	EMPAQUE DE TAPA FILTRO	1					
10	91312–06025	TORNILLO	14					
11	95812–06010	TORNILLO DE REBORDE	4					
12	5VY–13161–00	TUBO CONDUCTOR 1	1					
13	90110–06182	TORNILLO ALLEN	1					
14	39P–13470–00	ENFRIADOR DE ACEITE COMPLETO	1					
15	5FL–12822–00	.PERNO DE UNION	1					
16	5EB–13475–00	.EMPAQUE	1					
17	5JW–13473–00	.ANILLO O	1					

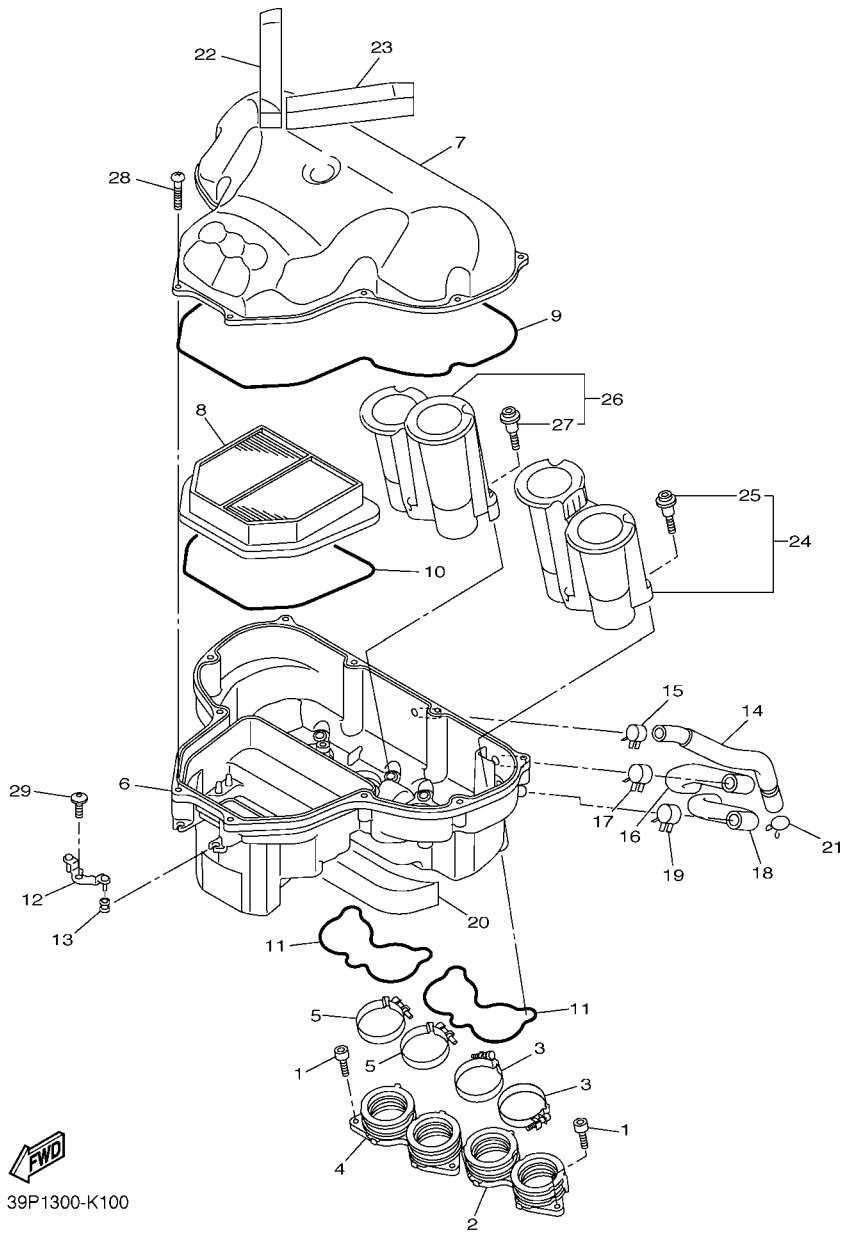

FIG. 10 ADMISION

REF. Nº	CODIGO Nº	DESCRIPCION	39P1					OBSERVACIONES
1	91312–06016	TORNILLO	6					
2	39P–13595–00	TOBERA	1					
3	90450–56007	BRIDA, MANGUERA	2					
4	39P–13596–00	TOBERA DE CARBURADOR 2	1					
5	90450–56007	BRIDA, MANGUERA	2					
6	39P–14411–00	CAJA FILTRO DEL AIRE 1	1					
7	39P–14421–00	CAJA FILTRO DEL AIRE 2	1					
8	2D1–14451–00	ELEMENTO DEL FILTRO DEL AIRE	1					
9	2D1–14452–00	SELLO	1					
10	2D1–14462–00	SELLO	1					
11	39P–14457–00	SELLO	2					
12	2D1–14498–00	SOPORTE 1	1					
13	90480–08264	TAPON	2					
14	39P–15393–00	TUBO, RESPIRADERO2	1					
15	90467–14171	PRESILLA	1					
16	39P–14148–00	TUBO	1					
17	90467–17003	PRESILLA	1					
18	39P–14149–00	TUBO	1					
19	90467–17003	PRESILLA	1					
20	2D1–14409–00	AMORTIGUADOR	1					
21	90467–14015	PRESILLA	1					
22	39P–14425–00	AMORTIGUADOR 1	1					
23	39P–14426–00	AMORTIGUADOR 2	1					
24	39P–1440B–00	UNION COMPLETO	1					
25	90109–05005	.PERNO	3					
26	39P–1440C–00	UNION COMPLETO 2	1					
27	90109–05005	.PERNO	3					

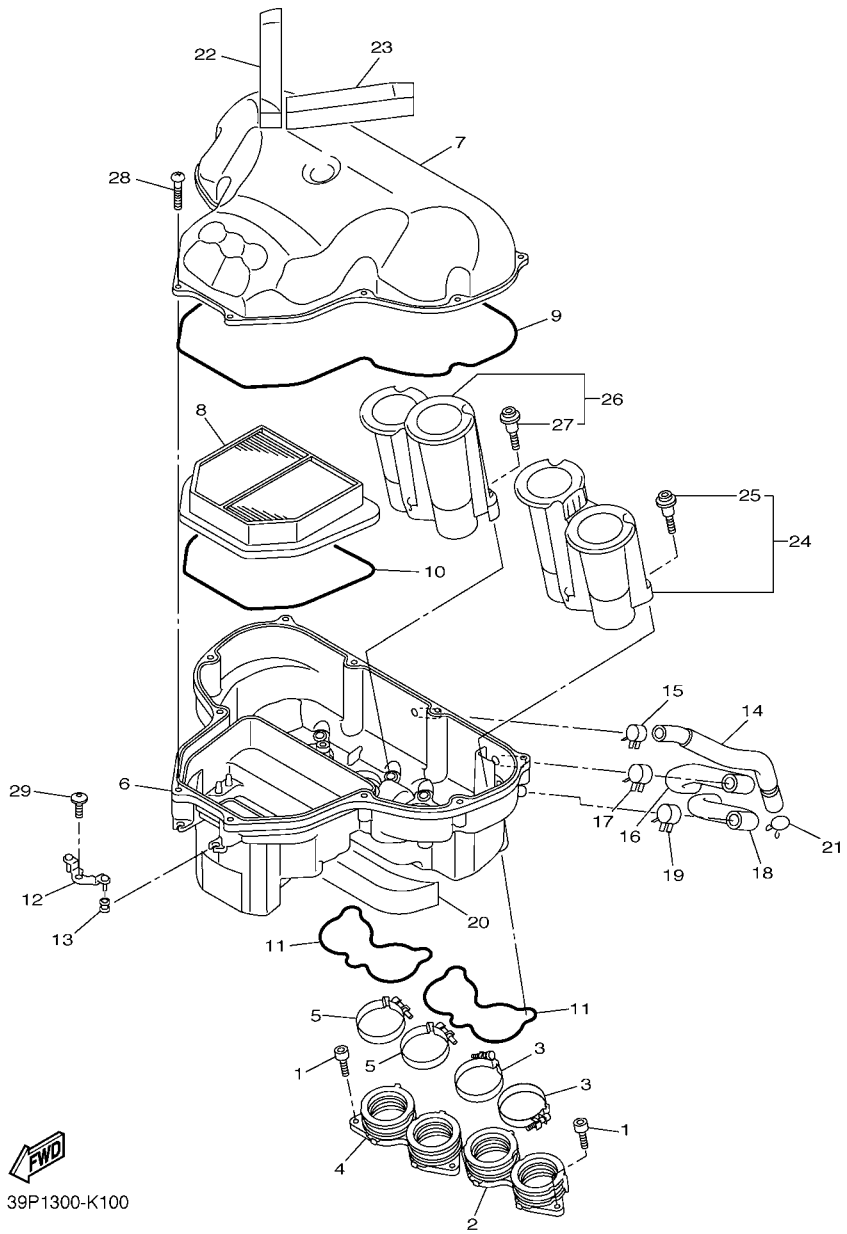

FIG. 10 ADMISION

REF. Nº	CODIGO Nº	DESCRIPCION	39P1					OBSERVACIONES
28	90160–05013	TORNILLO REDONDO ROSCA HEMBRA	11					
29	90111–06038	TORNILLO	1					

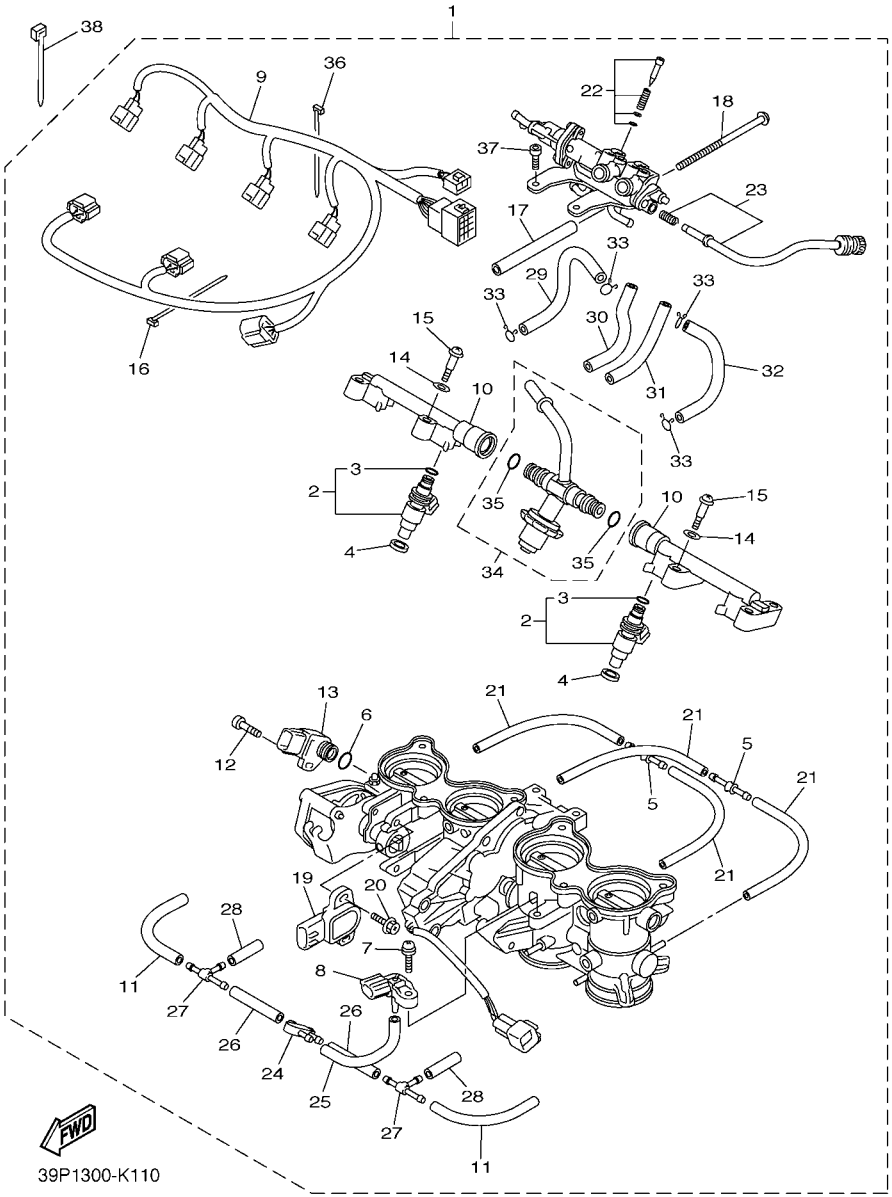

FIG. 11 ADMISION 2

REF. Nº	CODIGO Nº	DESCRIPCION	39P1					OBSERVACIONES
1	39P–13750–00	CAJA DE ACELERADOR COMPL.	1					
2	39P–13761–00	.INYECTOR	4					
3	5PS–14147–00	..ANILLO O	1					
4	8FP–13556–00	.ANILLO PROTECTOR	4					
5	5PW–14251–00	.NIPLE	2					
6	5YP–14561–00	.ANILLO O	1					
7	2C0–14216–00	.TORNILLO	1					
8	5S7–82380–00	.SENSOR DE PRESION	1					
9	39P–82386–00	.EXTENSION, ARNES DE CABLES	1					
10	39P–1393A–00	.TUBO	2					
11	69J–13532–00	.MANGUERA, DE VACIO 3	2					
12	8CC–14216–10	.TORNILLO	1					
13	5P0–H5885–00	.TERMICA SENSORIO	1					
14	363–14198–00	.EMPAQUE	4					
15	14B–13573–00	.PERNO 1	4					
16	39P–14137–00	.PRESILLA	1					
17	5VX–14149–00	.TUBO	1					
18	5VX–14565–00	.TORNILLO	1					
19	8GL–85885–00	.TERMICA SENSORIO	1					
20	5FL–14216–00	.TORNILLO	2					
21	5JW–14349–00	.TUBO	4					
22	5JW–14104–00	.CJTO. TORNNILLO DE AIRE	4					
23	39P–14503–00	.CARBURADOR COMPL.	1					
24	3XV–14251–00	.NIPLE	1					
25	5JW–14349–10	.TUBO	1					
26	8FP–14349–20	.TUBO	2					
27	68V–24376–00	.TUBO DE UNION 1	2					

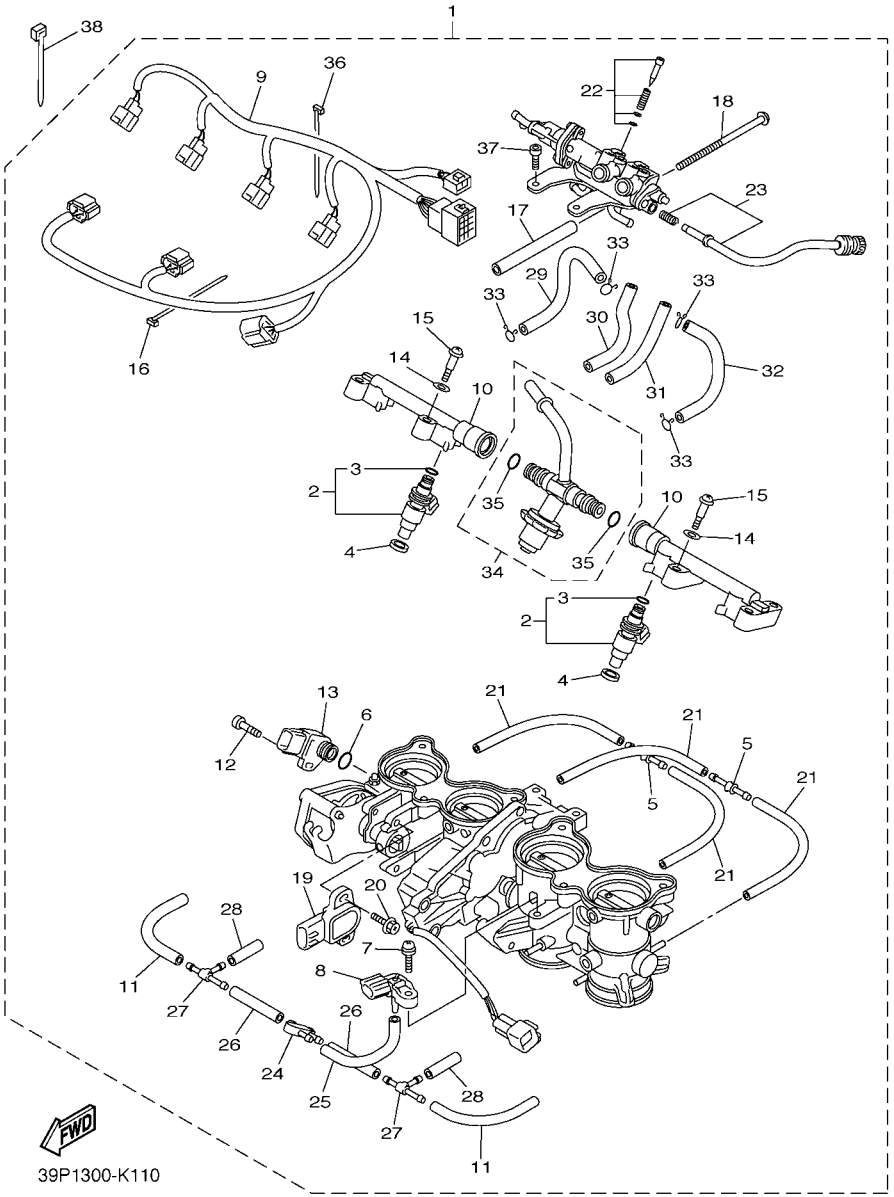

FIG. 11 ADMISION 2

REF. Nº	CODIGO Nº	DESCRIPCION	39P1					OBSERVACIONES
28	5FL–14348–10	.MANGUERA	2					
29	39P–14807–00	.TUBO COMPL.	1					
30	39P–14987–00	.TUBO	1					
31	31H–14987–00	.TUBO	1					
32	39P–14396–00	.TUBO	1					
33	3UH–14937–00	.PRESILLA	4					
34	39P–13795–00	.TOBERA UNION	1					
35	39P–14147–00	..ANILLO O	2					
36	90464–23003	.BRIDA	1					
37	39P–14592–00	.TORNILLO	2					
38	90465–13M11	BRIDA	1					

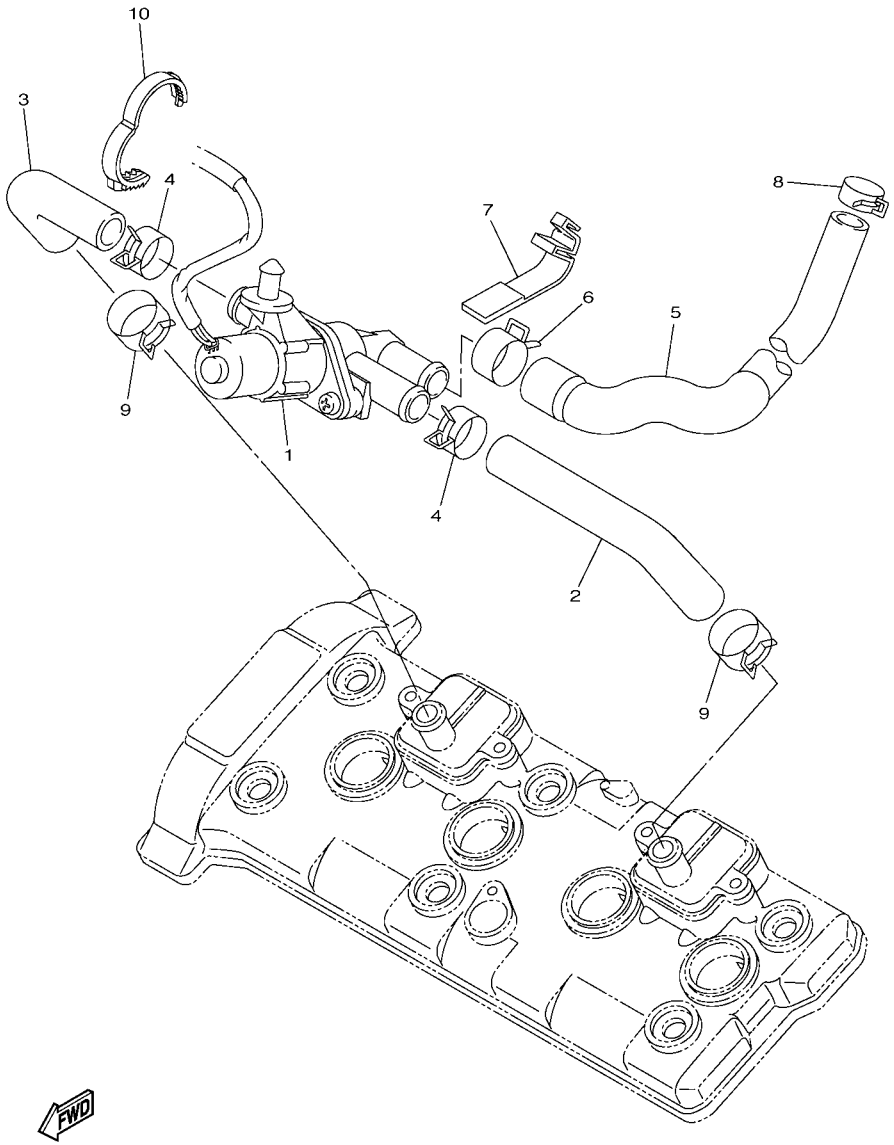

39P1300-K120

FIG. 12 SYSTEMA DE INDUCCION DE AIRE

REF. Nº	CODIGO Nº	DESCRIPCION	39P1					OBSERVACIONES
1	2D1–14840–00	VALVULA, CORTE DE AIRE	1					
2	5VY–14881–00	TUBO 1	1					
3	5VY–14882–00	TUBO 2	1					
4	90467–18172	PRESILLA	2					
5	39P–14883–00	TUBO 3	1					
6	90467–18172	PRESILLA	1					
7	5JW–14723–00	CUBIERTA	1					
8	90467–17128	PRESILLA	1					
9	90467–180A0	PRESILLA	2					
10	90464–26001	BRIDA	1					

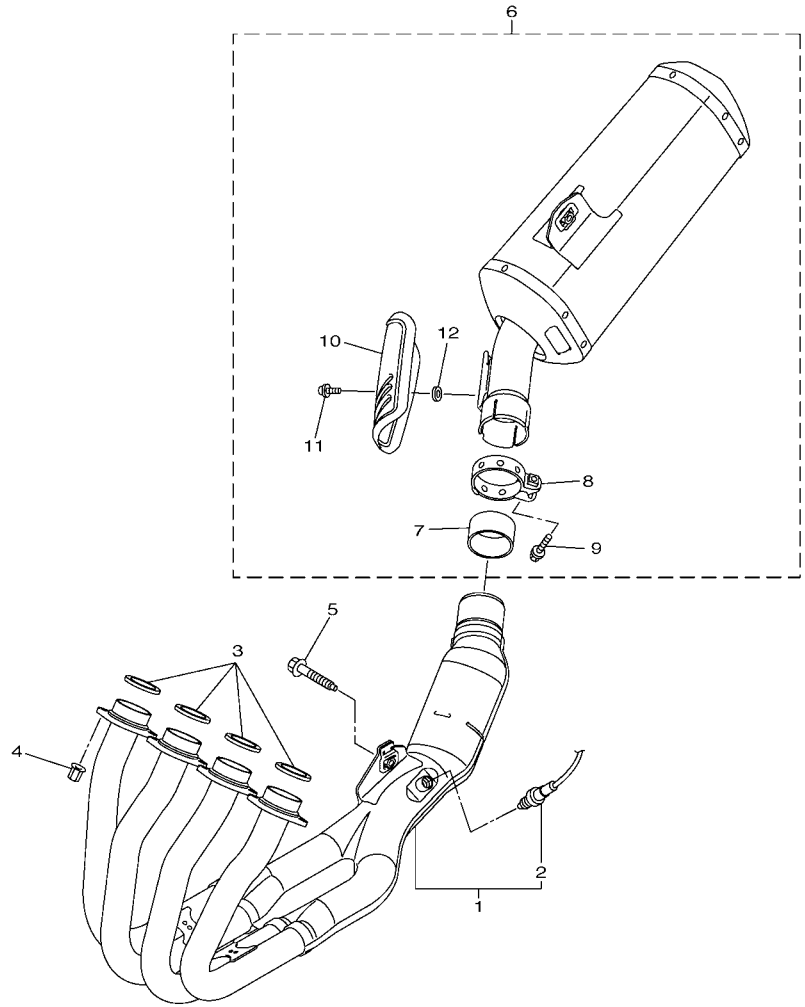

39P1300-K130

FIG. 13 DESCARGA

REF. Nº	CODIGO Nº	DESCRIPCION	39P1					OBSERVACIONES
1	39P–14610–00	TUBO DE ESCAPE COMPLETO 1	1					
2	39P–8592A–00	.SENSOR	1					
3	4FM–14613–00	JUNTA, TUBO DE ESCAPE	4					
4	90179–08410	TUERCA	8					
5	90109–08170	PERNO	1					
6	39P–14710–00	TUBO DE ESCAPE COMPLETO 1	1					
7	5YU–14714–10	.EMPAQUE DE SILENCIADOR	1					
8	39P–14715–00	.BANDA DE SILENCIADOR	1					
9	95024–08035	.PERNO, BRIDA	1					
10	39P–14718–00	.PROTECTOR DE SILENCIADOR 1	1					
11	90111–06060	.TORNILLO	2					
12	90201–05017	.ARANDELA PLANA	2					

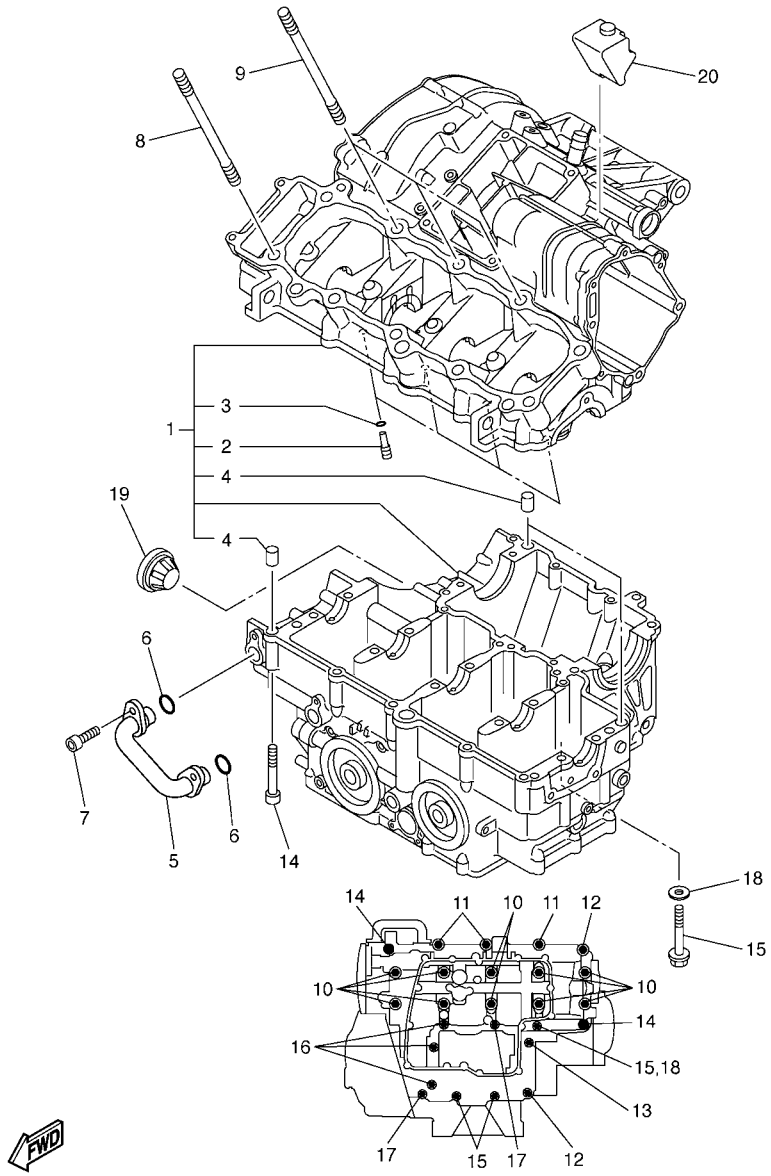

FIG. 14 CARTER

REF. Nº	CODIGO Nº	DESCRIPCION	39P1					OBSERVACIONES
1	4C8–15100–00	CARTER COMPLETO	1					
2	5EB–15155–00	.BOQUILLA 3	4					
3	93210–04092	.ANILLO O	4					
4	99530–10014	.PASADOR, DE ESPIGA	3					
5	39P–13418–00	TUBO DE ACEITE 2	1					
6	93210–14003	ANILLO O	2					
7	90110–06161	TORNILLO ALLEN	2					
8	90116–10032	ESPARRAGO	7					
9	90116–10023	ESPARRAGO	3					
10	90119–09012	TORNILLO CON ARANDELA	10					
11	95812–08050	TORNILLO DE REBORDE	3					
12	95812–08060	TORNILLO DE REBORDE	2					
13	90105–08101	TORNILLO	1					
14	90109–06100	PERNO	2					
15	95812–06060	TORNILLO DE REBORDE	3					
16	95812–06070	TORNILLO DE REBORDE	3					
17	95812–06050	TORNILLO DE REBORDE	2					
18	90430–06166	JUNTA	1					
19	5PW–15361–00	MEDIDOR DE NIVEL	1					
20	5VY–15316–00	AMORTIGUADOR 1	1					

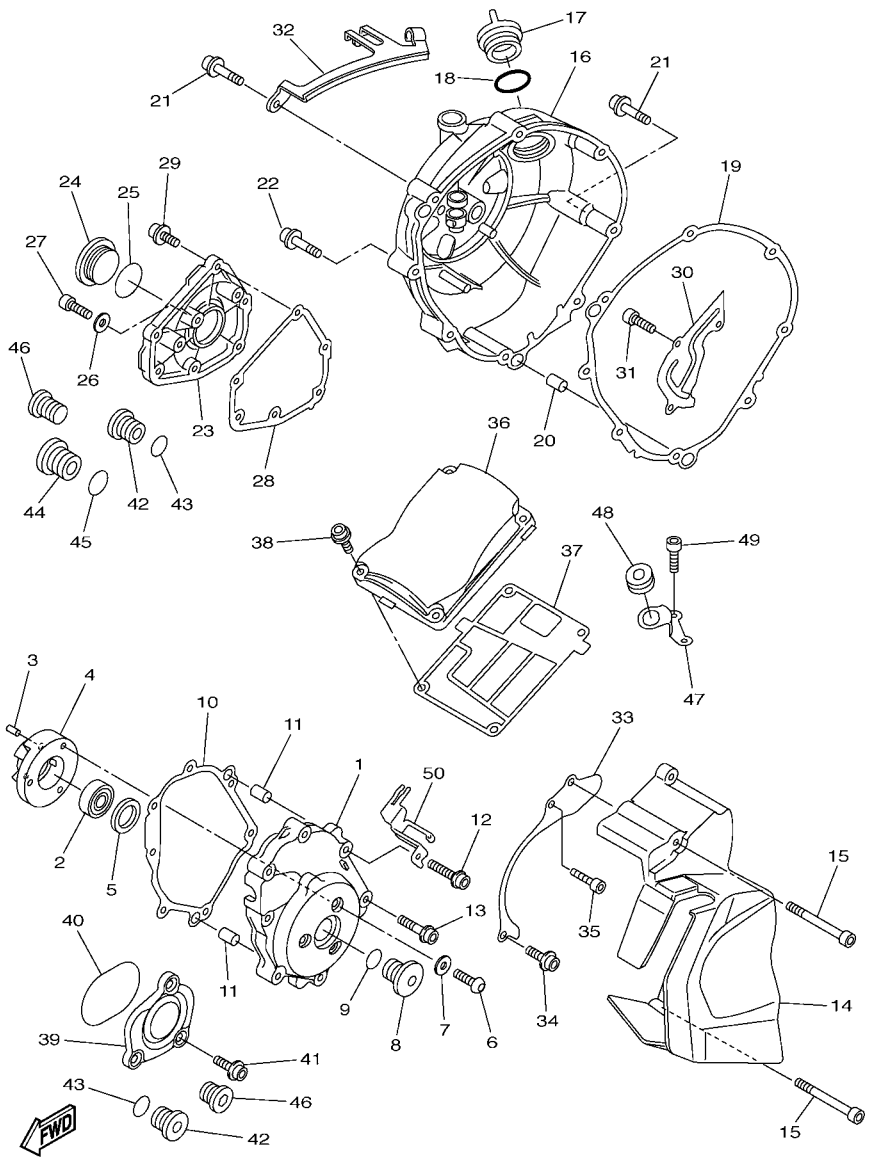

FIG. 15 CUBIERTA DE CARTER 1

REF. Nº	CODIGO Nº	DESCRIPCION	39P1					OBSERVACIONES
1	5VY–15411–00	CUBIERTA DE CARTER 1	1					
2	93306–20124	COJINETE	1					
3	93605–10108	PASADOR DE CLAVIJA	2					
4	5VY–15164–00	CAJA DE COJINETE 2	1					
5	5VY–15542–00	COLLAR 2	1					
6	90149–06064	TORNILLO DE REGLAJE	3					
7	90201–06431	ARANDELA PLANA	3					
8	5PX–15189–00	TAPON	1					
9	93210–22382	ANILLO O	1					
10	2D1–15451–10	EMPAQ DE CUBIERTA DE CARTER	1					
11	99480–10018	PASADOR	2					
12	90110–06323	TORNILLO ALLEN	4					
13	90110–08099	TORNILLO ALLEN	3					
14	2D1–15418–00	CUBIERTA CAJA DE CADENA	1					
15	90110–06255	TORNILLO ALLEN	3					
16	2D1–15421–00	TAPA DE CARTER DERECHA	1					
17	3F9–15362–10	TAPON DEL NIVEL DE ACEITE	1					
18	93210–27194	ANILLO O	1					
19	4C8–15461–00	JUNTA TAPA CARTER DERECHO 2	1					
20	93610–20189	PASADOR DE CLAVIJA	2					
21	90110–06321	TORNILLO ALLEN	7					
22	90110–06320	TORNILLO ALLEN	1					
23	2D1–15416–00	CUBIERTA DE BOMBA DE ACEITE	1					
24	90340–32004	TORNILLO, DE DRENAJE	1					
25	93210–32172	ANILLO O	1					
26	90430–08143	JUNTA	1					
27	92014–08012	PERNO	1					

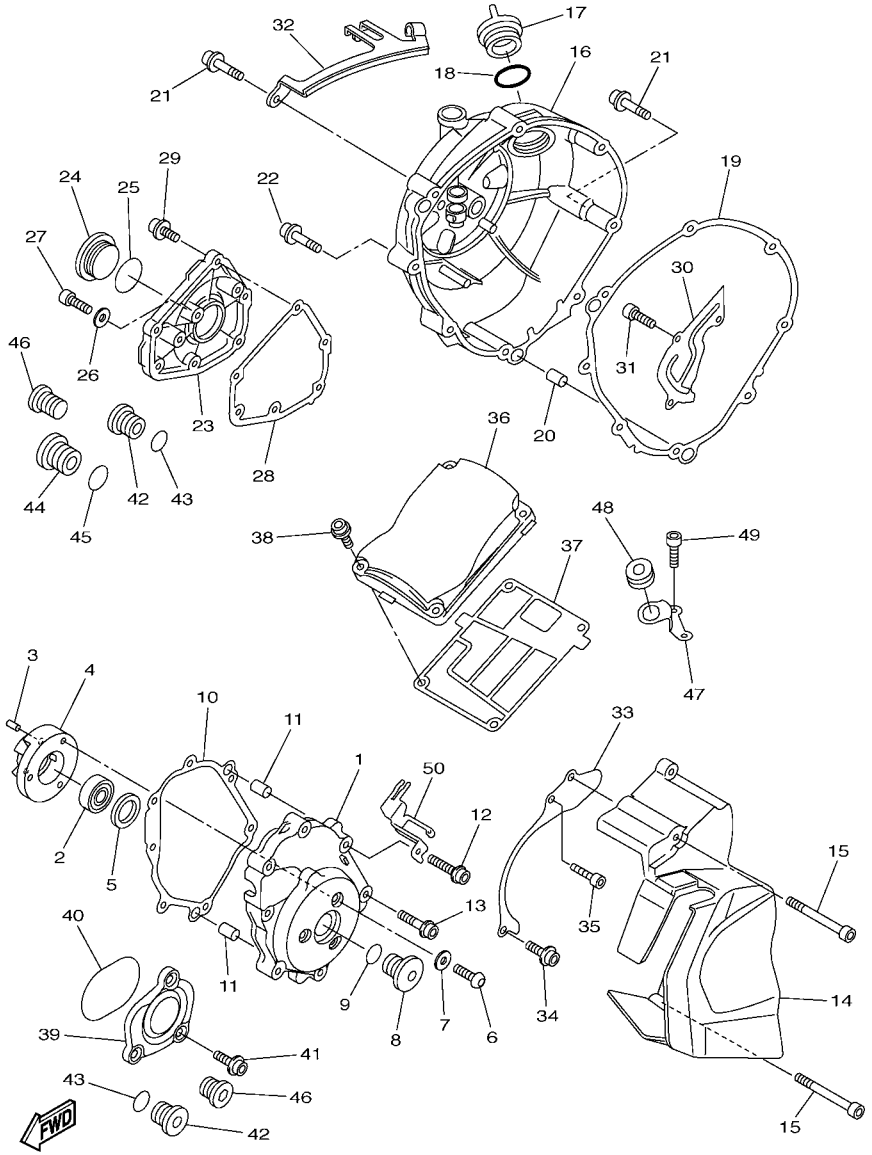

FIG. 15 CUBIERTA DE CARTER 1

REF. Nº	CODIGO Nº	DESCRIPCION	39P1					OBSERVACIONES
28	4C8–15456–00	EMPAQ CUBTA.BOMBA ACEITE 1	1					
29	90110–06331	TORNILLO ALLEN	6					
30	5VY–11165–00	PLACA RESPIRADERO	1					
31	90110–06182	TORNILLO ALLEN	3					
32	39P–15441–00	SOSTEN DE CABLE DE EMBRAGUE	1					
33	39P–15113–00	PLACA	1					
34	90110–06277	TORNILLO ALLEN	1					
35	90110–06276	TORNILLO ALLEN	1					
36	2D1–15413–00	CUBIERTA	1					
37	4C8–15462–00	EMPAQ CUBIERTA DE CARTER 3	1					
38	90110–06172	TORNILLO ALLEN	4					
39	4C8–15431–00	CUBIERTA DE CARTER 3	1					
40	93210–57003	ANILLO O	1					
41	90110–06331	TORNILLO ALLEN	3					
42	36Y–15189–00	TAPON	3					
43	93210–16325	ANILLO O	3					
44	4H7–15189–00	TAPON	1					
45	93210–22382	ANILLO O	1					
46	90340–12003	TORNILLO, DE DRENAJE	2					
47	5VY–12443–10	APOYO	1					
48	90480–13014	TAPON	1					
49	91380–06014	PERNO	2					
50	39P–14413–00	SOPORTE	1					

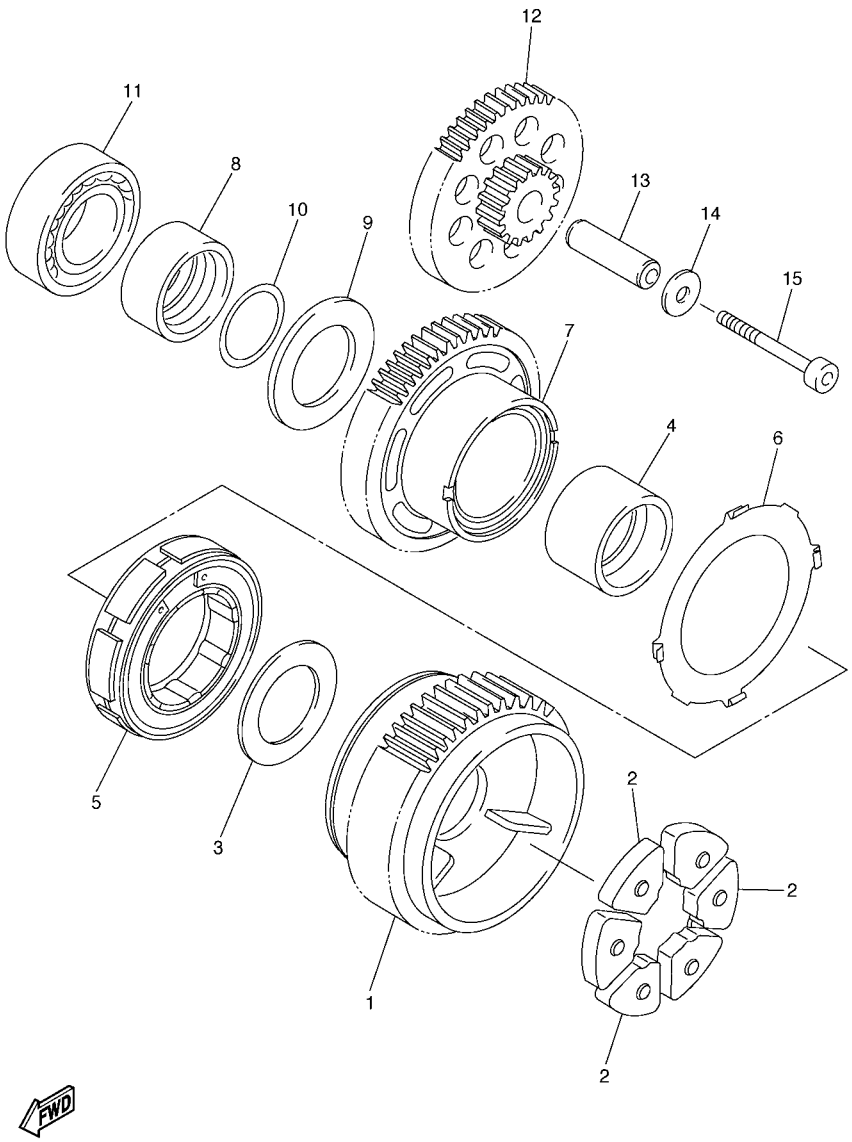

5VY1300-C160

FIG. 16 ARRANQUE

REF. Nº	CODIGO Nº	DESCRIPCION	39P1					OBSERVACIONES
1	2D1–11537–10	ENGRANAJE TRACCION	1					
2	5VY–16155–00	AMORTIGUADOR 1	3					
3	90201–20016	ARANDELA PLANA	1					
4	5VY–11478–00	COLLAR	1					
5	5VY–15570–00	EMBRAGUE DEL ARRANQUE COMPLETA	1					
6	5VY–15586–00	PLACA	1					
7	5VY–15515–00	ENGRANAJE 3	1					
8	5VY–11445–00	ESPACIADOR	1					
9	90201–20017	ARANDELA PLANA	1					
10	93210–18397	ANILLO O	1					
11	93306–20230	COJINETE	1					
12	5VY–15517–00	ENGRENAJE POSICION 2DA	1					
13	5VY–15521–00	EJE 1	1					
14	90201–06589	ARANDELA PLANA	1					
15	90110–06176	TORNILLO ALLEN	1					

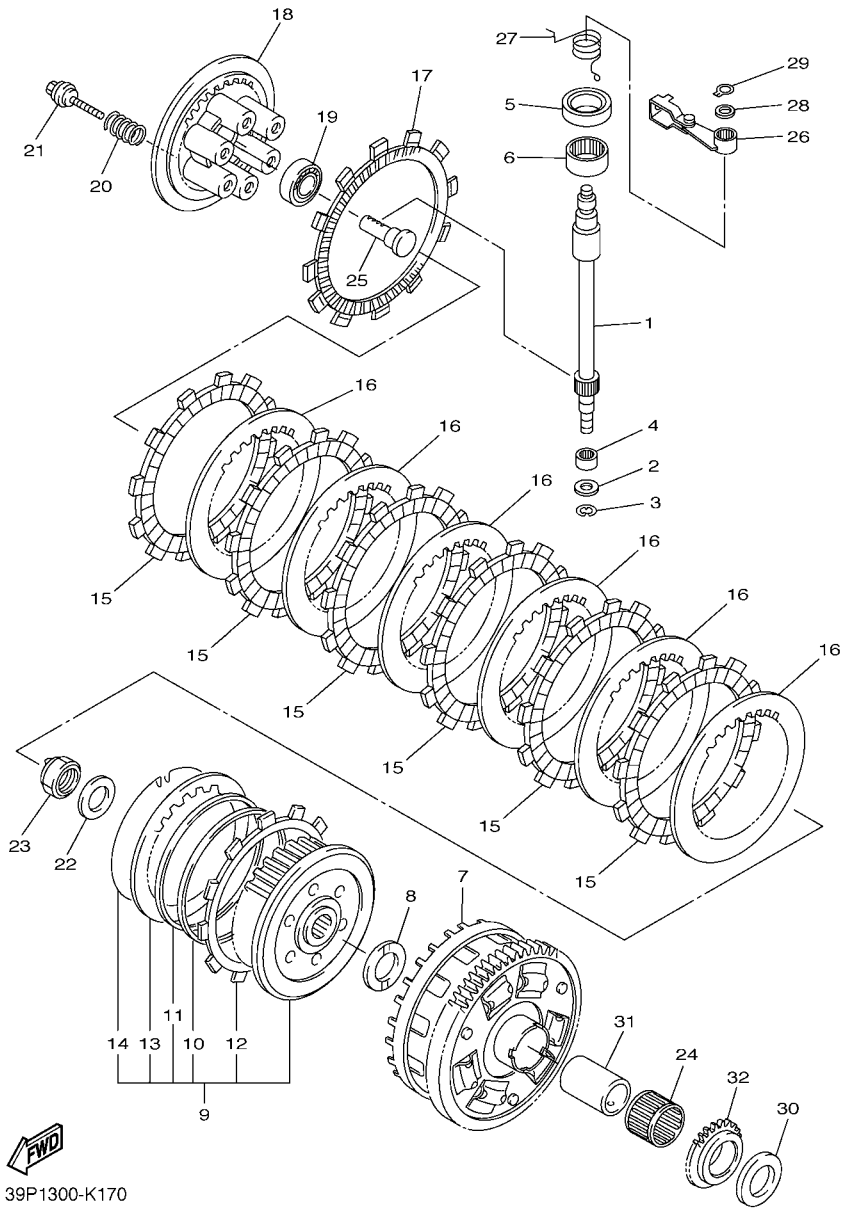

39P1300-K170

FIG. 17 EMBRAGUE

REF. Nº	CODIGO Nº	DESCRIPCION	39P1					OBSERVACIONES
1	2D1–16382–00	EJE DE PALANCA DE EMPUJE	1					
2	92907–08600	ARANDELA	1					
3	99001–07600	PRESILLA REDONDA	1					
4	93317–11096	COJINETE	1					
5	93102–15212	SELLO ACEITE	1					
6	93315–31502	COJINETE DE RODILLOS	1					
7	5VY–16150–00	CAMPANA DE EMBRAGUE	1					
8	5VY–16154–00	ARANDELA, DE EMPUJE 1	1					
9	39P–16370–00	COPA DE EMBRAGUE COMPLETA	1					
10	5VY–16384–00	.PLACA DE ASIENTO	1					
11	5VY–16383–00	.RESORTE.,COJIN	1					
12	5VY–16331–00	.DISCO, DE FRICCION 2	1					
13	5VY–16325–00	.DISCO, DE EMBRAGUE	1					
14	4X7–16385–00	.SET OF ANILLO	1					
15	5VY–16321–00	PLACA DE FRICCION	6					
16	5VY–16325–00	DISCO, DE EMBRAGUE	6					
17	5VY–16330–00	PLACA DE FRICCION 2	1					
18	5VY–16351–00	PLATO DE PRESION	1					
19	93306–00304	COJINETE	1					
20	90501–230A0	RESORTE DE COMPRESION	6					
21	90119–06257	TORNILLO CON ARANDELA	6					
22	90208–20001	ARANDELA DE RESORTE CONICO	1					
23	90179–20007	TUERCA	1					
24	93310–232R9	COJINETE DE RODILLOS	1					
25	4XV–16356–01	VARILLA DE EMPUJE 1	1					
26	5VY–16340–00	PALANCA DE EMPUJE COMPLETA	1					
27	90508–18051	RESORTE DE TORSION	1					

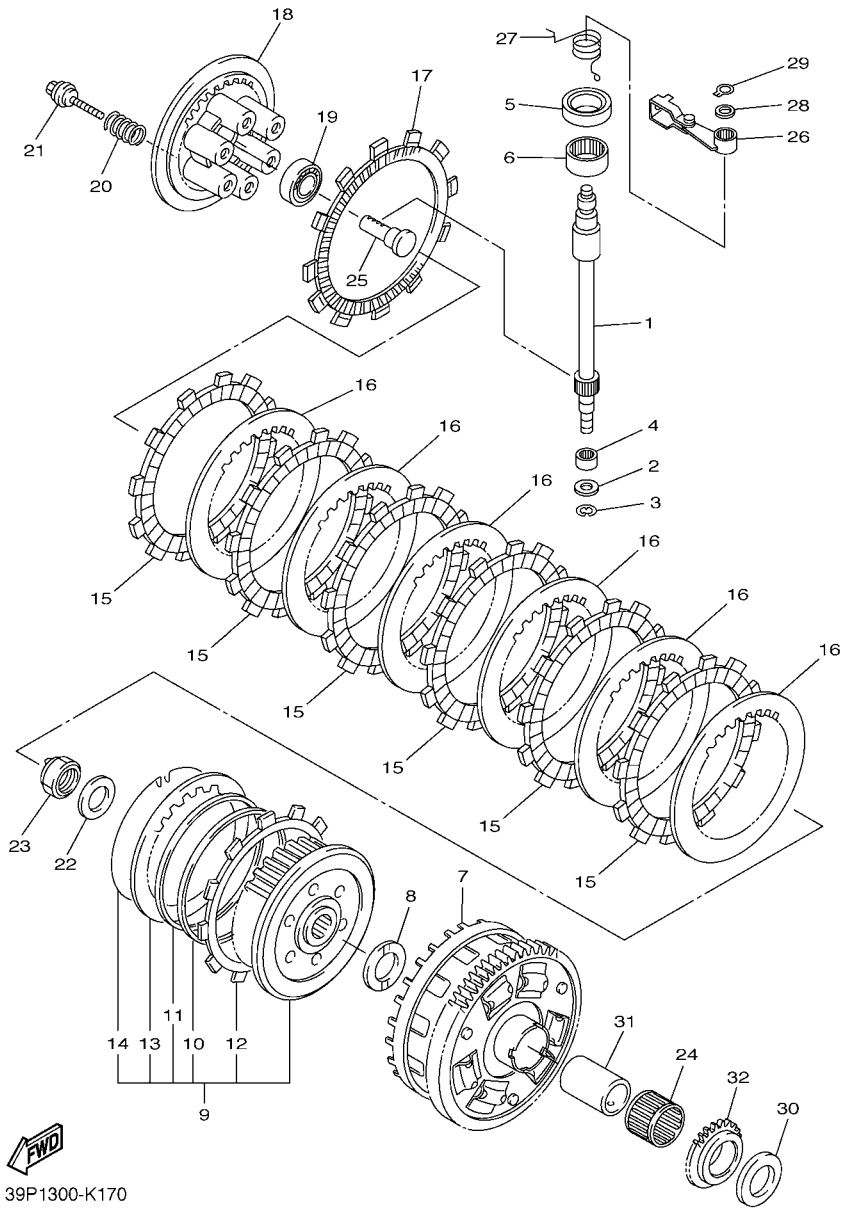

FIG. 17 EMBRAGUE

REF. Nº	CODIGO Nº	DESCRIPCION	39P1					OBSERVACIONES
28	90201–10029	ARANDELA PLANA	1					
29	99009–10400	PRESILLA REDONDA	1					
30	5VY–16164–00	PLACA DE EMPUJE 2	1					
31	5VY–16181–00	SEPARADOR	1					
32	5VY–13354–00	CATALINA	1					

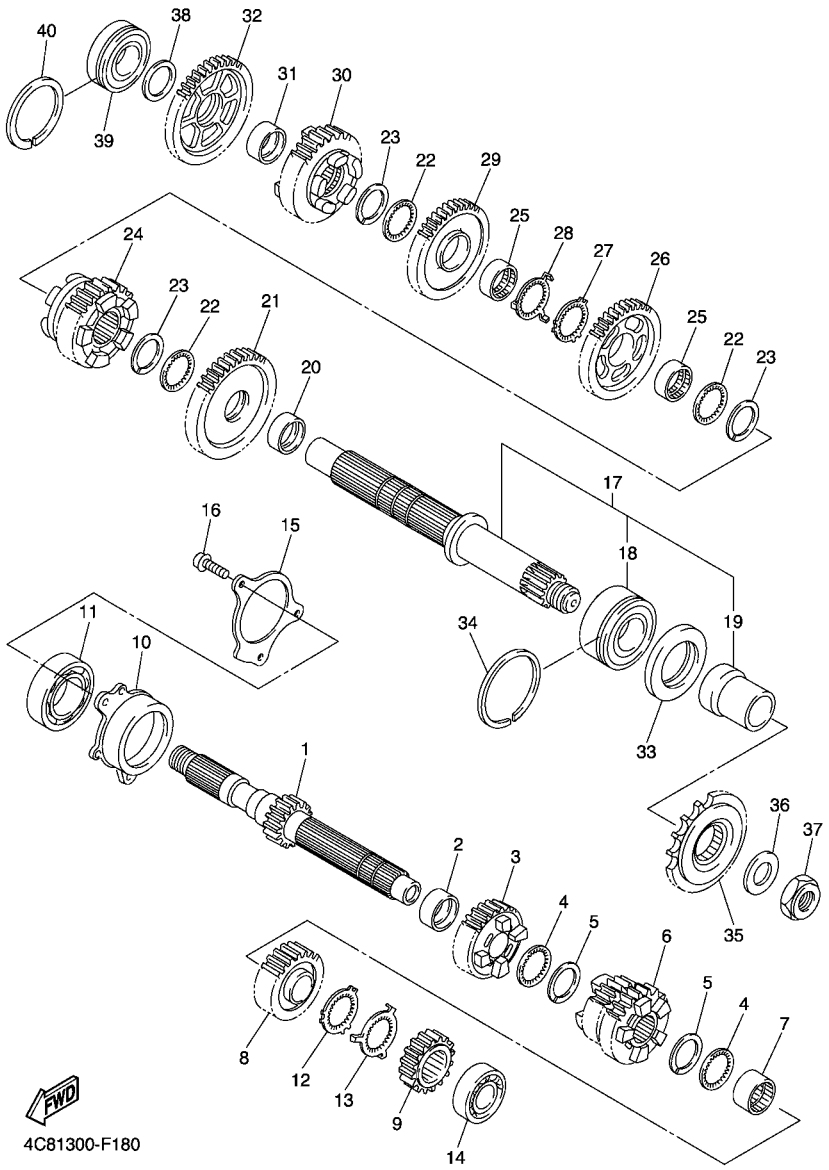

FIG. 18 TRANSMISION

REF. Nº	CODIGO Nº	DESCRIPCION	39P1					OBSERVACIONES
1	39P–17411–00	EJE PRIMARIO (13T)	1					
2	90387–28003	ESPACIADOR	1					
3	39P–17151–00	ENGRANAJE PINON DE 5TA (20T)	1					
4	90209–25011	ARANDELA DE SEPARACION	2					
5	93440–28184	SEGURO	2					
6	39P–17131–00	ENGRANAJE PINON DE 3RA(21/23T)	1					
7	90387–25007	ESPACIADOR	1					
8	39P–17161–00	ENGRANAJE PINON 6TA (24T)	1					
9	39P–17121–00	ENGRANAJE DE PINON DE 2DA(16T)	1					
10	5VY–15163–00	CAJA DE COJINETE 1	1					
11	93306–20652	COJINETE	1					
12	90214–25004	ARANDELA DE POSICION	1					
13	90214–25003	ARANDELA DE POSICION	1					
14	93306–27209	COJINETE	1					
15	5VY–17446–00	PLACA	1					
16	90110–06164	TORNILLO ALLEN	3					
17	4C8–17402–00	EJE DE TRACCION COMPLETO	1					
18	93305–20605	.COJINETE	1					
19	5VY–17442–00	.COLLAR DISTANCIADOR	1					
20	90387–31003	ESPACIADOR	1					
21	39P–17221–00	ENGRANAJE RUEDA DE 2DA (33T)	1					
22	90209–28008	ARANDELA DE SEPARACION	3					
23	93440–31187	SEGURO	3					
24	39P–17261–00	ENGRANAJE DE RUEDA 6TA (29T)	1					
25	90387–28004	ESPACIADOR	2					
26	39P–17241–00	ENGRANAJE DE RUEDA 4TA (35T)	1					
27	90214–29002	ARANDELA DE POSICION	1					

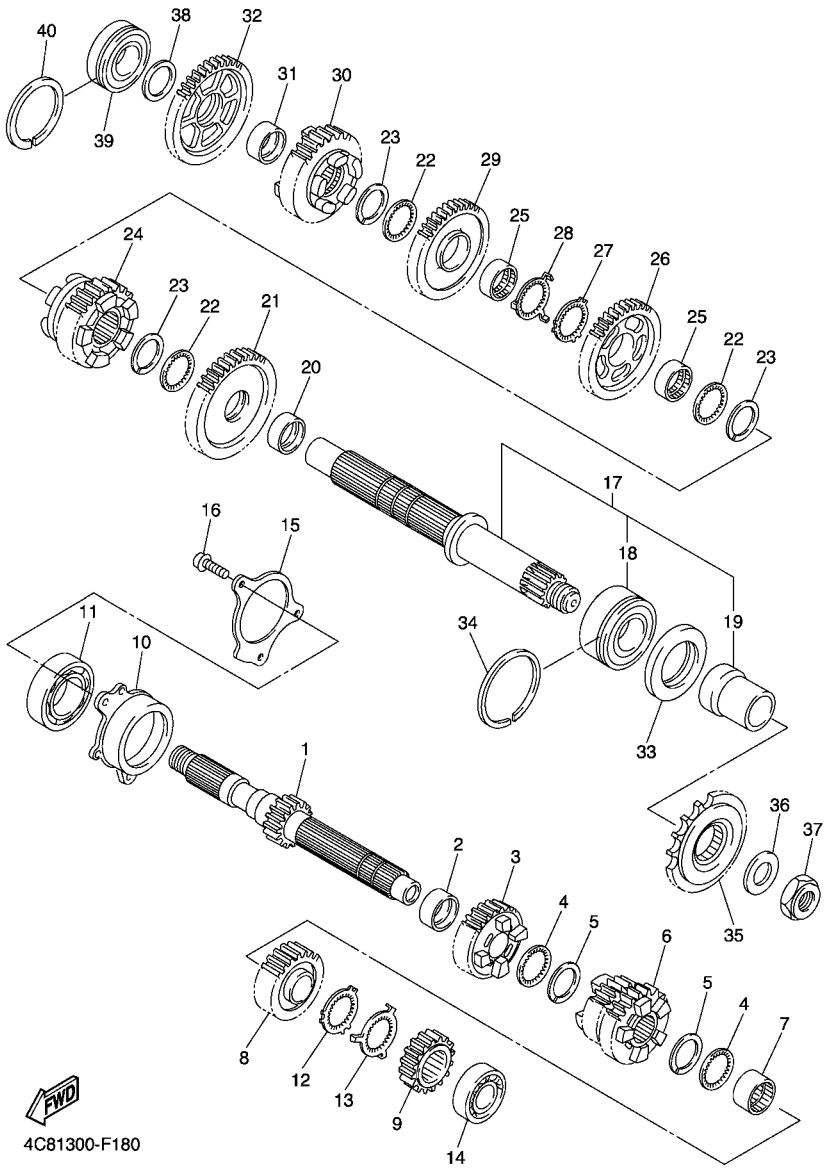

FIG. 18 TRANSMISION

REF. Nº	CODIGO Nº	DESCRIPCION	39P1					OBSERVACIONES
28	90214–28002	ARANDELA DE POSICION	1					
29	5VY–17231–00	ENGRANAJE RUEDA DE 3RA (37T)	1					
30	39P–17251–00	ENGRANAJE DE RUEDA 5TA (27T)	1					
31	90387–25008	ESPACIADOR	1					
32	39P–17211–00	ENGRANAJE RUEDA DE 1RA (35T)	1					
33	93102–40330	SELLO ACEITE	1					
34	93440–62032	SEGURO	1					
35	5PS–17460–00	CORONA (16T)	1					
36	90201–22015	ARANDELA PLANA	1					
37	90179–22019	TUERCA	1					
38	90201–257H0	ARANDELA PLANA	1					
39	93306–205A2	COJINETE	1					
40	93440–52009	SEGURO	1					

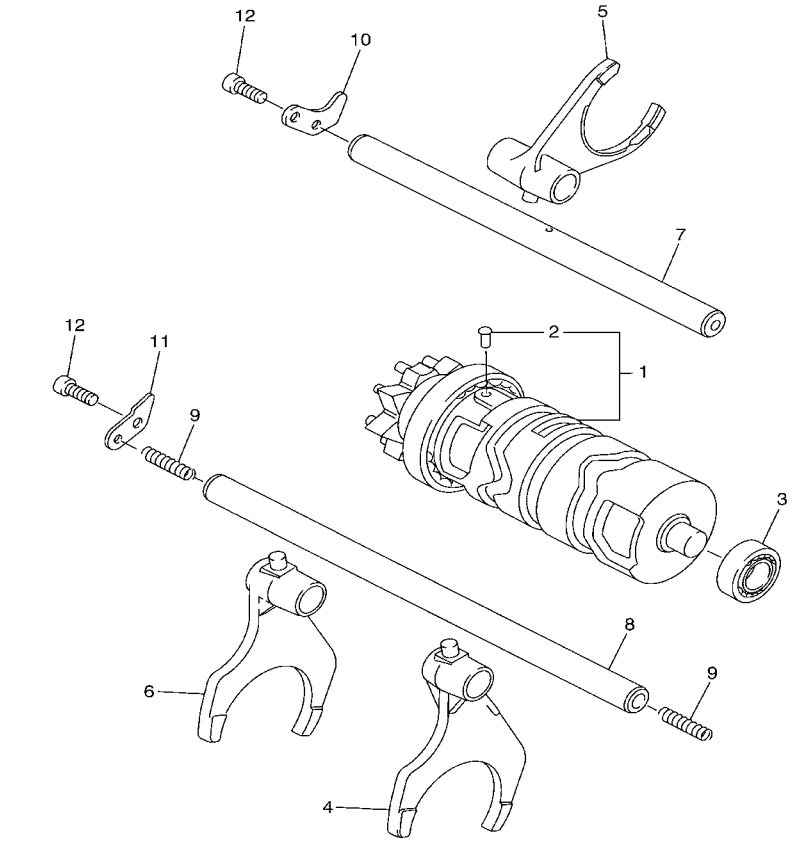

5VY1300-C191

FIG. 19 LEVA DE CAMBIO & HORQUILLA

REF. Nº	CODIGO Nº	DESCRIPCION	39P1					OBSERVACIONES
1	5VY–18540–00	LEVA DEL CAMBIO COMPLETA	1					
2	136–18542–00	.PUNTO MUERTO	1					
3	93306–00106	COJINETE	1					
4	2D1–18511–00	HORQUILLA DEL CAMBIO 1	1					
5	39P–18512–00	HORQUILLA DEL CAMBIO 2	1					
6	5VY–18513–01	HORQUILLA DEL CAMBIO 3	1					
7	5VY–18531–00	BARRA GUIA HORQ. CAMBIO 1	1					
8	5VY–18535–00	BARRA GUIA HORQ .CAMBIO 2	1					
9	90501–064L1	RESORTE DE COMPRESION	2					
10	5VY–18536–00	TOPE DE PALANCA SELECTOR	1					
11	5VY–18562–00	PLACA DE TOPE 2	1					
12	90110–06182	TORNILLO ALLEN	2					

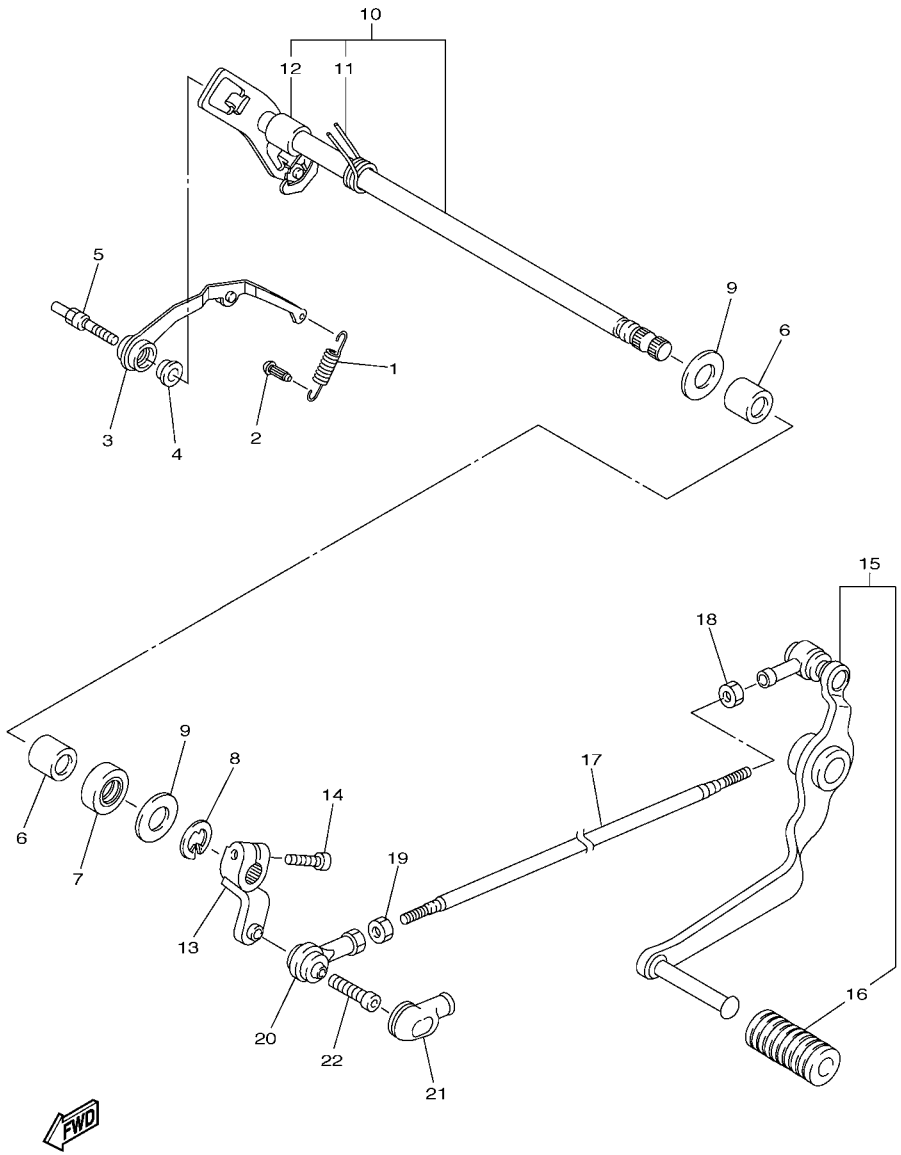

FIG. 20 EJE DE CAMBIO & PEDAL

REF. Nº	CODIGO Nº	DESCRIPCION	39P1					OBSERVACIONES
1	5VY–18144–00	GANCHO DE RESORTE	1					
2	132–16346–00	GANCHO DE RESORTE	1					
3	5VY–18140–00	PALANCA DE TOPE COMPLETA	1					
4	90387–0804S	ESPACIADOR	1					
5	5VY–18127–10	PASADOR DE PALANCA	1					
6	93317–11295	COJINETE	2					
7	93102–12106	SELLO ACEITE (SD 12-22-5 HS)	1					
8	99002–10600	PRESILLA REDONDA	1					
9	90201–12575	ARANDELA PLANA	2					
10	2D1–18101–00	EJE SELECTOR COMPLETO	1					
11	90508–32020	.RESORTE DE TORSION	1					
12	90387–1211D	.ESPACIADOR	1					
13	2D1–18112–00	BRAZO DEL CAMBIO	1					
14	91312–06020	TORNILLO	1					
15	39P–18110–00	PEDAL DE CAMBIO COMPLETO	1					
16	5EB–18113–00	.FUNDA DEL PEDAL DEL CAMBIO	1					
17	39P–18115–00	VARILLA DEL CAMBIO	1					
18	90170–06228	TUERCA	1					
19	95304–06700	TUERCA	1					
20	5VX–18116–00	VARILLA DE CONECTOR 1	1					
21	5VX–18154–00	CUBIERTA GUARDAPOLVO	1					
22	90111–06098	TORNILLO	1					

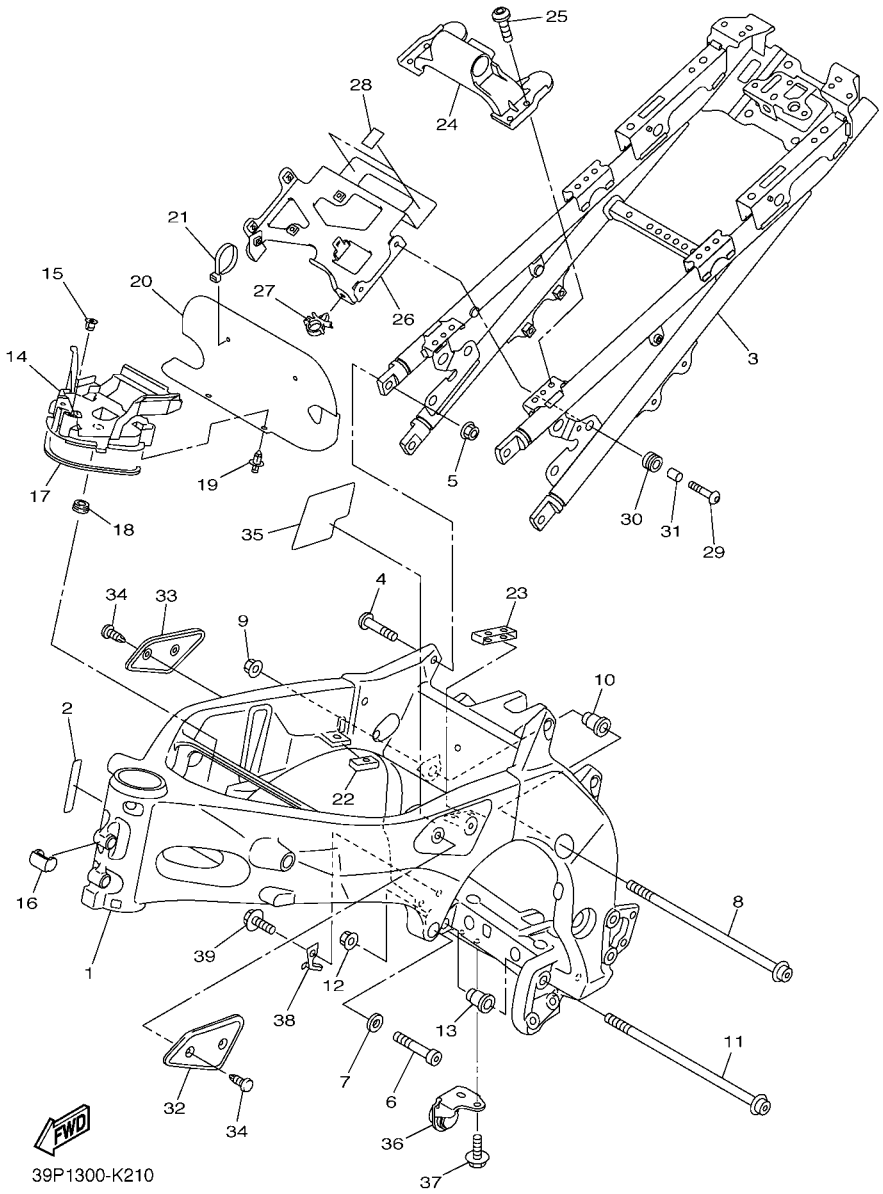

FIG. 21 CUADRO

REF. Nº	CODIGO Nº	DESCRIPCION	39P1					OBSERVACIONES
1	2D1–21110–01–P0	ARMAZON COMPLETO	1					MBL2
2	2D1–2197E–00	PROTECTOR DE CUADRO	1					
3	39P–21190–00	CUADRO TRASERO COMPLETA	1					
4	90157–10001	TORNILLO CABEZA CONICA PLANA	4					
5	95602–10200	TUERCA DE AUTO-CIERRE	4					
6	91314–10040	TORNILLO ALLEN	2					
7	90201–10020	ARANDELA PLANA	2					
8	90110–10024	TORNILLO ALLEN	1					
9	90179–10025	TUERCA	1					
10	4C8–21495–00	PERNO DE AJUSTE	1					
11	90110–10024	TORNILLO ALLEN	1					
12	90179–10025	TUERCA	1					
13	4C8–21495–00	PERNO DE AJUSTE	1					
14	39P–2117N–00	CUBIERTA 3	1					
15	90269–08058	REMACHE	1					
16	2D1–21399–00	TAPA	1					
17	2D1–2174Y–00	AMORTIGUADOR	1					
18	90480–01333	TAPON	1					
19	90269–06001	REMACHE	2					
20	2D1–2117G–00	PROTECTOR	1					
21	1UA–82591–00	BANDA	2					
22	2D1–24184–00	AMORTIGUADOR DE MONTAJE 4	1					
23	2D1–24185–00	AMORTIGUADOR DE MONTAJE 5	1					
24	39P–2413Y–00	SOPORTE ACCESORIO DE DEPOSITO	1					
25	90111–06038	TORNILLO	4					
26	39P–21287–00	SOPORTE DE REGULADOR	1					
27	90464–16006	BRIDA	1					

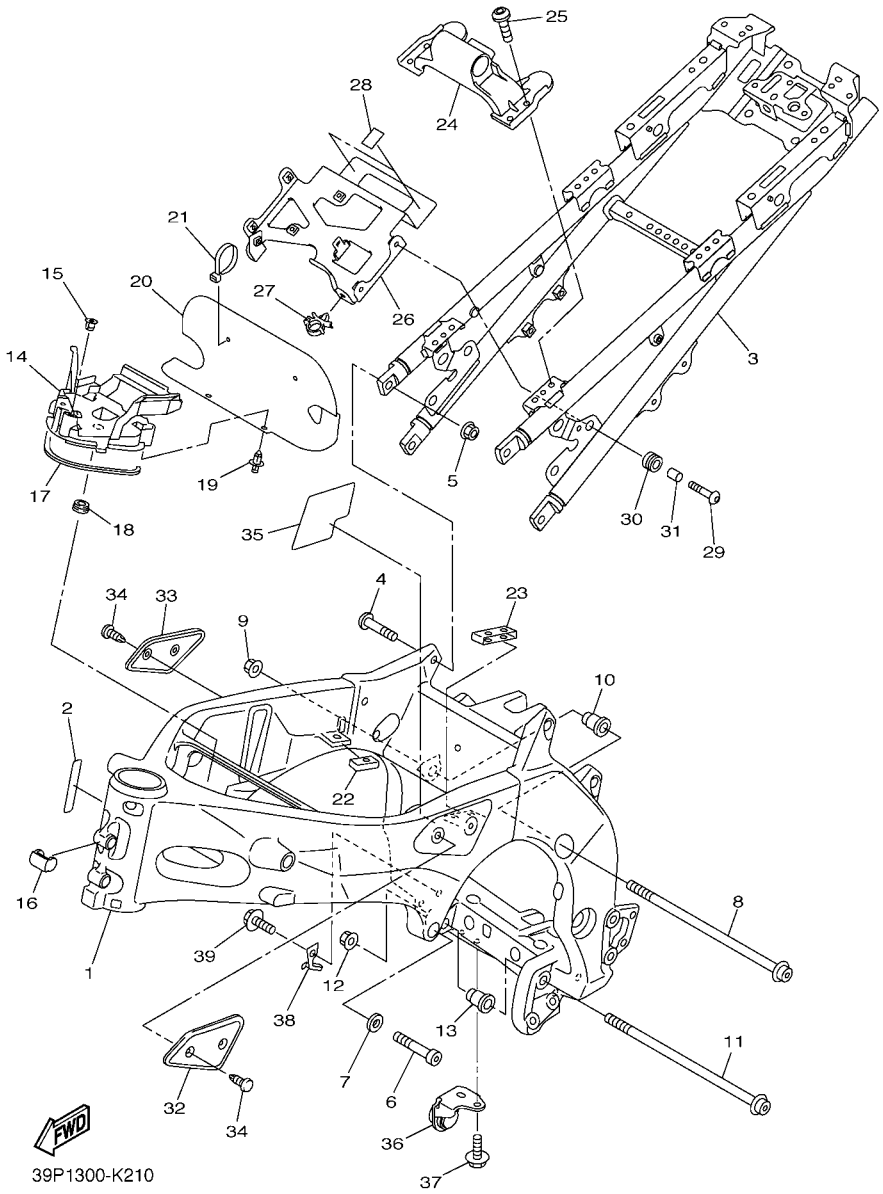

FIG. 21 CUADRO

REF. Nº	CODIGO Nº	DESCRIPCION	39P1					OBSERVACIONES
28	5YU–21639–00	AMORTIGUADOR 2	2					
29	92012–06020	PERNO	4					
30	90480–14030	TAPON	4					
31	90387–065L7	ESPACIADOR	4					
32	2D1–24129–00	CUBIERTA LATERAL 1	1					
33	2D1–24139–00	CUBIERTA LATERAL 2	1					
34	90269–06003	REMACHE	4					
35	39P–21575–00	SELLO 1	1					
36	39P–27425–00	SOPORTE DE APOYAPIE 2	1					
37	95812–08016	TORNILLO DE REBORDE	2					
38	39P–27267–00	GUIA DE CABLE	1					
39	95022–10016	PERNO, DE BRIDA	1					

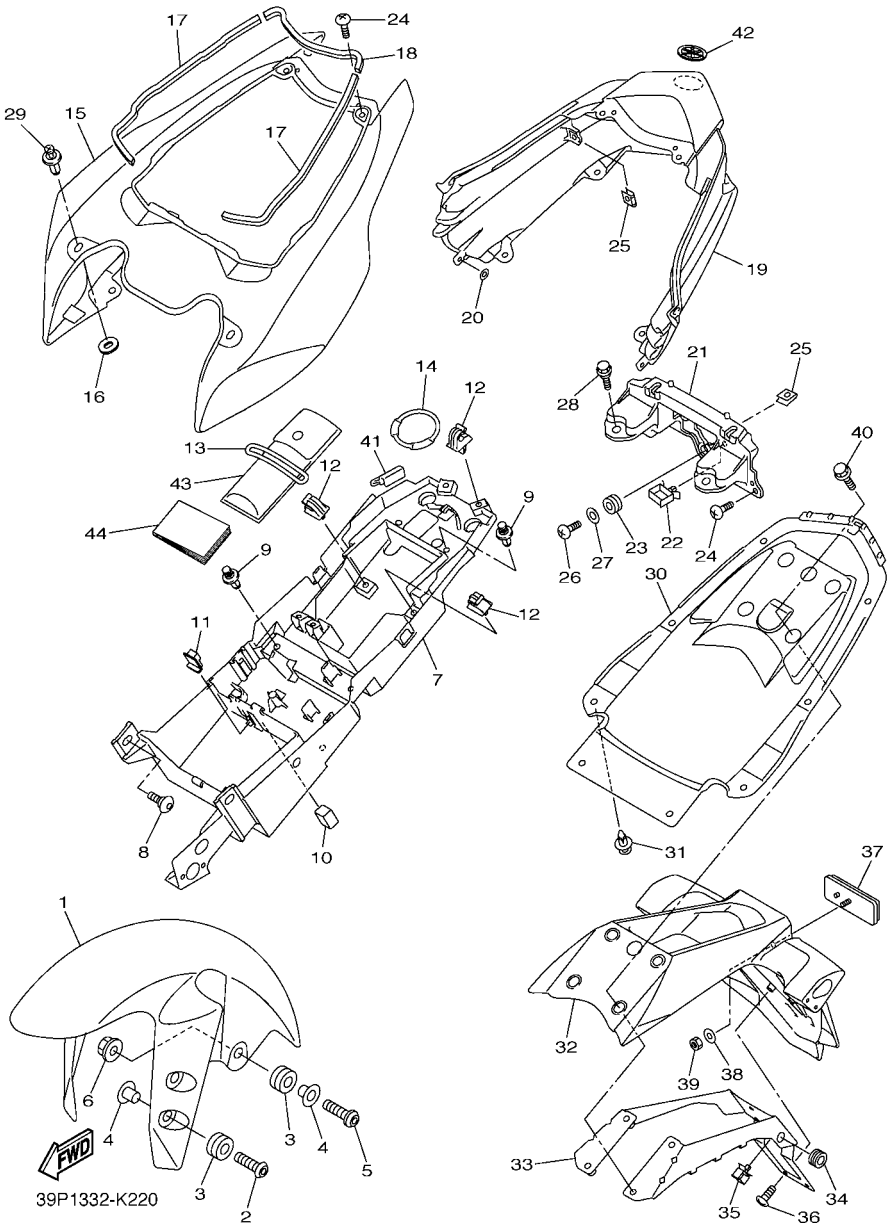

FIG. 22 GUARDABARRO

REF. Nº	CODIGO Nº	DESCRIPCION	39P1					OBSERVACIONES
1	5PW–21511–00–P6	GUARDABARRO DELANTERO	1					SMX
2	90149–06302	TORNILLO DE REGLAJE	4					
3	90480–12072	TAPON	6					
4	90387–065J6	ESPACIADOR	6					
5	90111–06030	TORNILLO	2					
6	95702–06500	TUERCA DE BRIDA	2					
7	2D1–8212B–02	CAJA DE BATERIA	1					
8	90109–06253	PERNO	2					
9	90269–07077	REMACHE	4					
10	2D1–216A2–00	SELLO 2	1					
11	2D1–216A3–00	SELLO 3	1					
12	90464–07259	BRIDA	4					
13	4XV–21376–00	BANDA DE HERRAMIENTA	1					
14	2D1–21646–00	BANDA	1					
15	39P–21651–00–P0	TAPA DE GUARDABARRO TRAS.	1					UR PARA SMX
	39P–21651–00–P1	TAPA DE GUARDABARRO TRAS.	1					UR PARA BWC1
	39P–21651–00–P2	TAPA DE GUARDABARRO TRAS.	1					UR PARA DPBMC
16	5PW–2174X–00	AMORTIGUADOR	2					
17	90520–05014	EQUILIBRIO, CUBIERTA	2					
18	90520–05013	EQUILIBRIO, CUBIERTA	1					
19	39P–2163A–00	CUBIERTA TRAS GUARDABARRO 1	1					
20	90183–05M02	TUERCA DE RESORTE	2					
21	39P–2117E–00	SOPORTE DE LANTERNA TRAZERA	1					
22	90464–16021	BRIDA	1					
23	90480–18276	TAPON	3					
24	97702–50016	TORNILLO ROSCA HEMBRA	4					
25	90183–05042	TUERCA DE RESORTE	4					

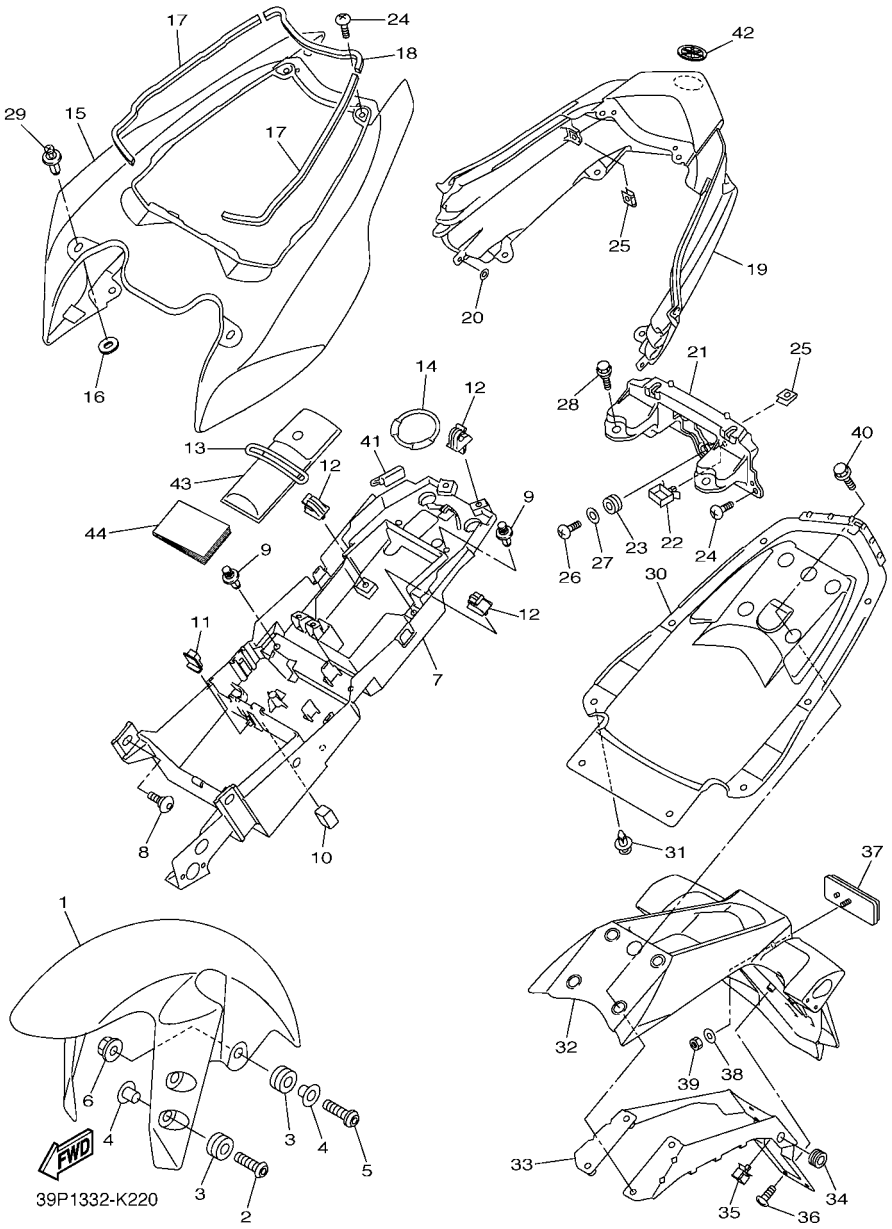

FIG. 22 GUARDABARRO

REF. Nº	CODIGO Nº	DESCRIPCION	39P1					OBSERVACIONES
26	97702–50014	TORNILLO ROSCA HEMBRA	3					
27	90201–05036	ARANDELA PLANA	3					
28	90109–06172	PERNO	2					
29	90269–07076	REMACHE	2					
30	39P–21611–00	GUARDABARRO TRASERO	1					
31	90269–07077	REMACHE	8					
32	2D1–21629–00	GUARDABARRO INFERIOR	1					
33	2D1–21688–02	SOPORTE	1					
34	90480–13004	TAPON	2					
35	90464–16021	BRIDA	1					
36	90160–05012	TORNILLO REDONDO ROSCA HEMBRA	6					
37	3Y6–85130–02	REFLECTOR TRASERO COMPLETO	1					
38	90201–05043	ARANDELA PLANA	1					
39	95602–05100	TUERCA AUTOBLOCANTE	1					
40	90105–08180	TORNILLO	4					
41	39P–24785–00	MOLDURA DE ASIENTO	2					
42	4KN–2836B–10	MARCA	1					
43	39P–28100–00	JUEGO DE HERRAMIENTAS	1					
44	39P–28199–S0	MANUAL DEL PROPRIETARIO	1					

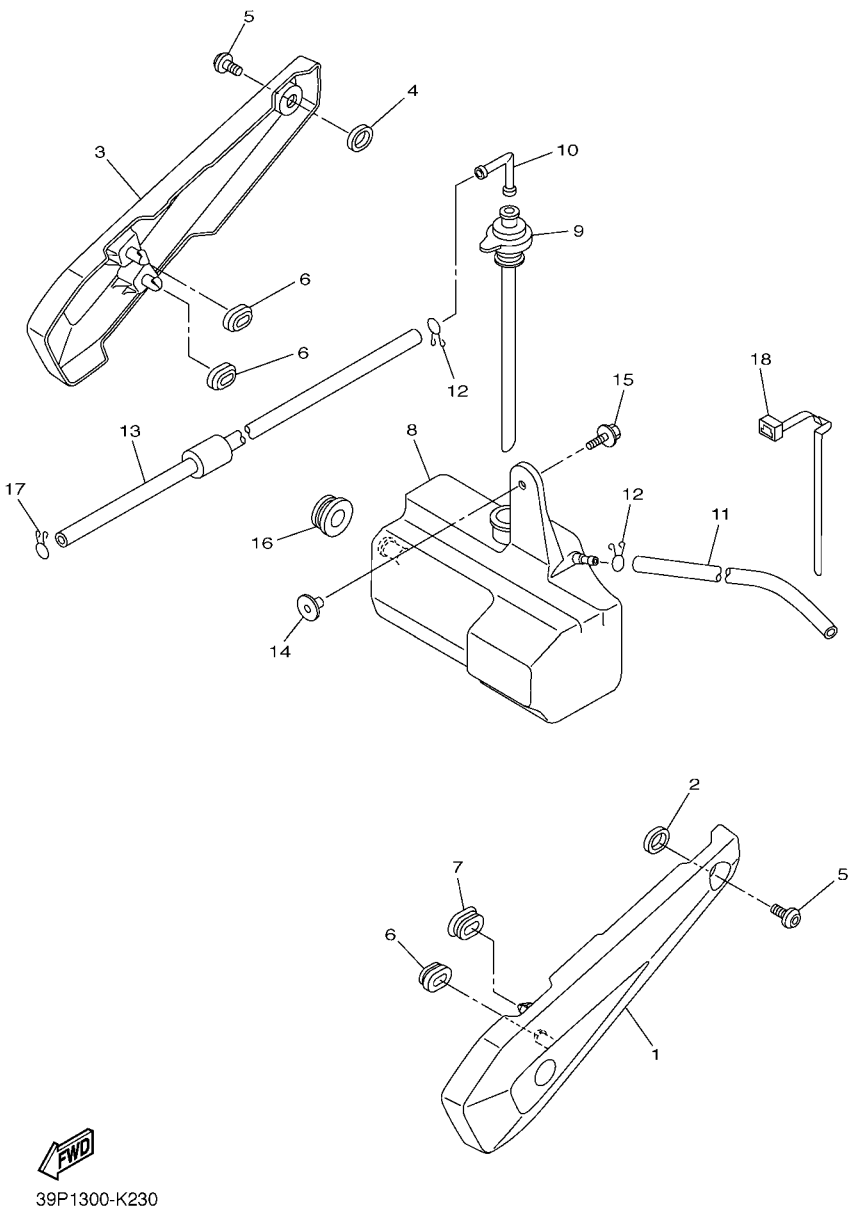

FIG. 23 CUBIERTA LATERAL

REF. Nº	CODIGO Nº	DESCRIPCION	39P1					OBSERVACIONES
1	39P–21711–00	CUBIERTA LATERAL 1	1					
2	39P–2174X–00	AMORTIGUADOR	1					
3	39P–21721–00	CUBIERTA LATERAL 2	1					
4	39P–2174X–00	AMORTIGUADOR	1					
5	90149–06298	TORNILLO DE REGLAJE	2					
6	90480–01559	TAPON	3					
7	2D1–21719–00	ANILLO PROTECTOR	1					
8	2D1–21871–00	TANQUE DE RECUPERACION	1					
9	5VY–21875–00	TAPA	1					
10	26H–21828–00	CODO	1					
11	90445–08022	TUBO	1					
12	90467–080A1	PRESILLA	2					
13	90445–087K6	TUBO (L700)	1					
14	90387–062M9	ESPACIADOR	1					
15	90119–06230	TORNILLO CON ARANDELA	1					
16	90480–20001	TAPON	1					
17	90467–080A1	PRESILLA	1					
18	90464–07M40	BRIDA	1					

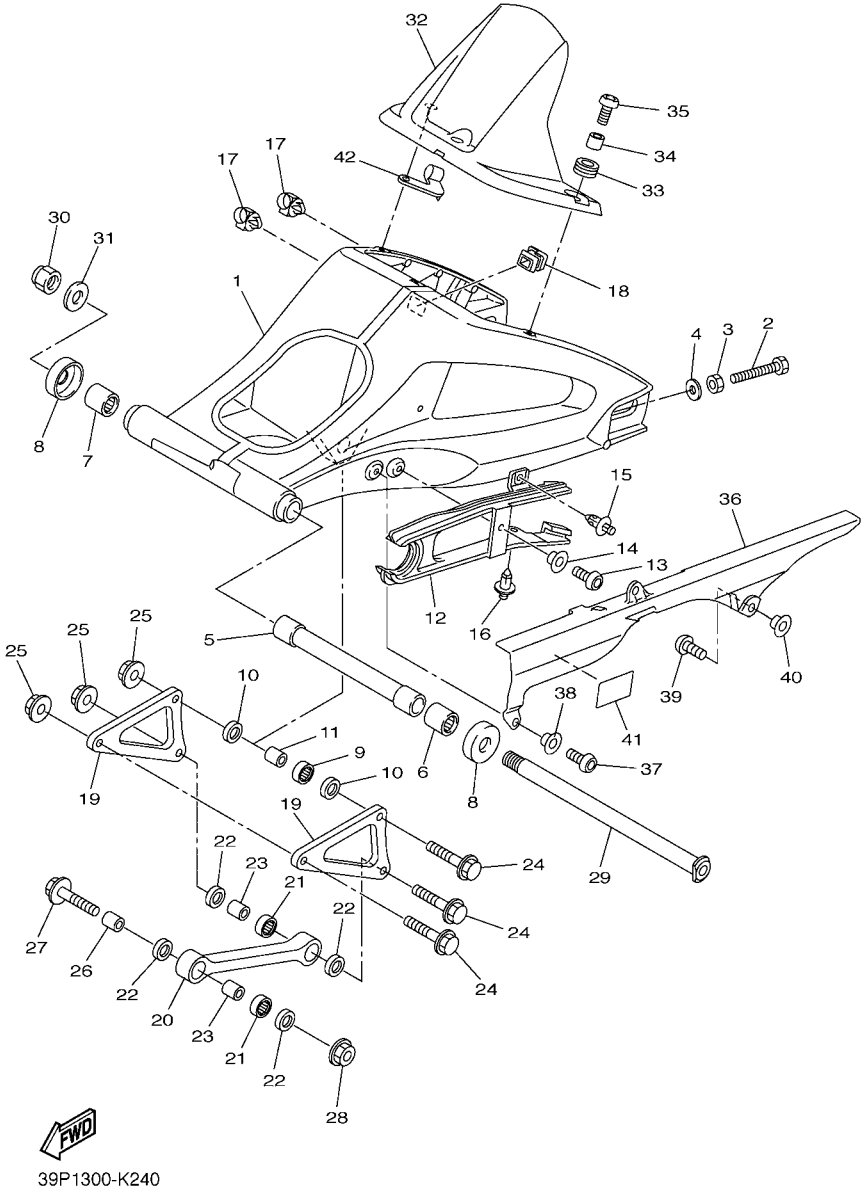

FIG. 24 BRAZO TRASERO

REF. Nº	CODIGO Nº	DESCRIPCION	39P1					OBSERVACIONES
1	39P–22110–00	BRAZO TRASERO COMPLETO	1					
2	90101–08013	TORNILLO	2					
3	95302–08600	TUERCA	2					
4	90201–08057	ARANDELA PLANA	2					
5	39P–22184–00	BUJE	1					
6	93317–42599	COJINETE	1					
7	93315–42536	COJINETE DE RODILLOS	1					
8	5JJ–22128–00	TAPA DE EMPIJE 1	2					
9	93315–41762	COJINETE DE RODILLOS	1					
10	93109–17071	SELLO ACEITE	2					
11	90387–1012A	ESPACIADOR	1					
12	2D1–22151–00	SELLO DE GUARDA	1					
13	92012–06014	PERNO	1					
14	90387–06130	ESPACIADOR	1					
15	90269–07007	REMACHE	1					
16	90269–07008	REMACHE	1					
17	90464–17003	BRIDA	2					
18	2D1–22117–00	TAPA	1					
19	2D1–2217A–10	BRAZO REEURIO	2					
20	2D1–2217M–00	BRAZO 1	1					
21	93315–31758	COJINETE DE RODILLOS	2					
22	93109–17071	SELLO ACEITE	4					
23	90387–1012A	ESPACIADOR	2					
24	90105–10283	TORNILLO	3					
25	95602–10200	TUERCA DE AUTO-CIERRE	3					
26	90387–10043	ESPACIADOR	1					
27	90105–10211	TORNILLO	1					

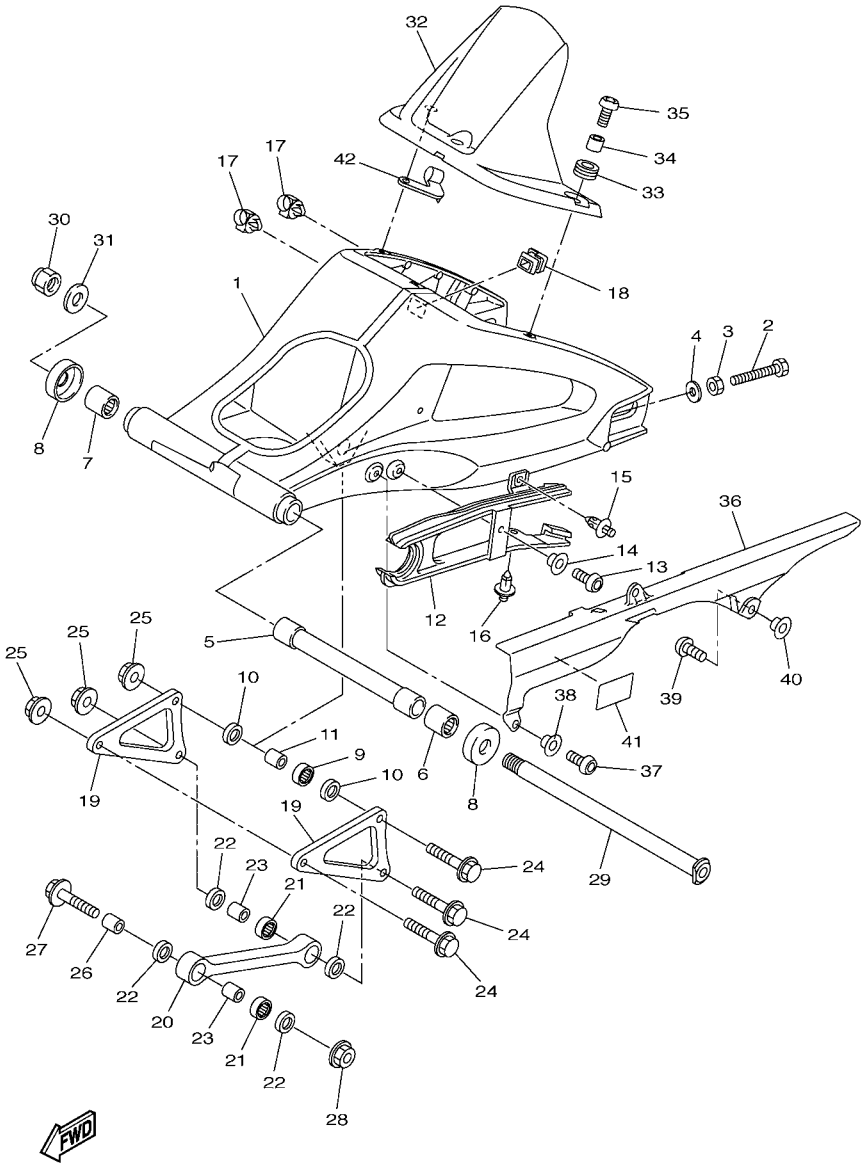

FIG. 24 BRAZO TRASERO

REF. Nº	CODIGO Nº	DESCRIPCION	39P1					OBSERVACIONES
28	95602–10200	TUERCA DE AUTO-CIERRE	1					
29	39P–22141–00	EJE DEL BARCULANTE	1					
30	90185–18009	TUERCA AUTOBLOCANTE	1					
31	90201–18013	ARANDELA PLANA	1					
32	2D1–21650–00	GUARDABARRO TRANSERO COMP.	1					
33	90480–12003	TAPON	3					
34	90387–06219	ESPACIADOR	3					
35	90149–06302	TORNILLO DE REGLAJE	3					
36	5SL–22311–00	CABRECADENA	1					
37	92012–06014	PERNO	1					
38	90387–06130	ESPACIADOR	1					
39	90110–06102	TORNILLO ALLEN	2					
40	90387–06009	ESPACIADOR	2					
41	14B–21668–00	ETIQUETA DE FRANJA	1					
42	2D1–25886–00	SOPORTE DE MANGUERA FRENO	1					

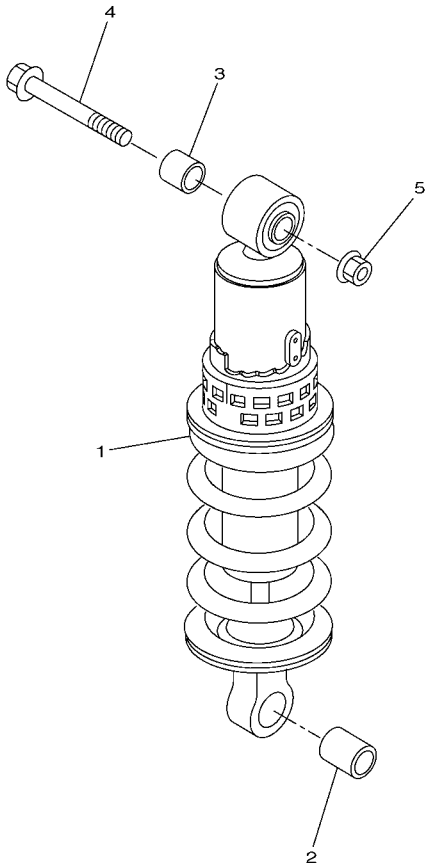

39P1300-K250

FIG. 25 SUSPENSION TRASERO

REF. Nº	CODIGO Nº	DESCRIPCION	39P1					OBSERVACIONES
1	39P–22210–00	AMORTIGUADOR TRASERO COMPLETO	1					
2	90387–1012A	ESPACIADOR	1					
3	90387–10043	ESPACIADOR	1					
4	90105–10211	TORNILLO	1					
5	95602–10200	TUERCA DE AUTO-CIERRE	1					

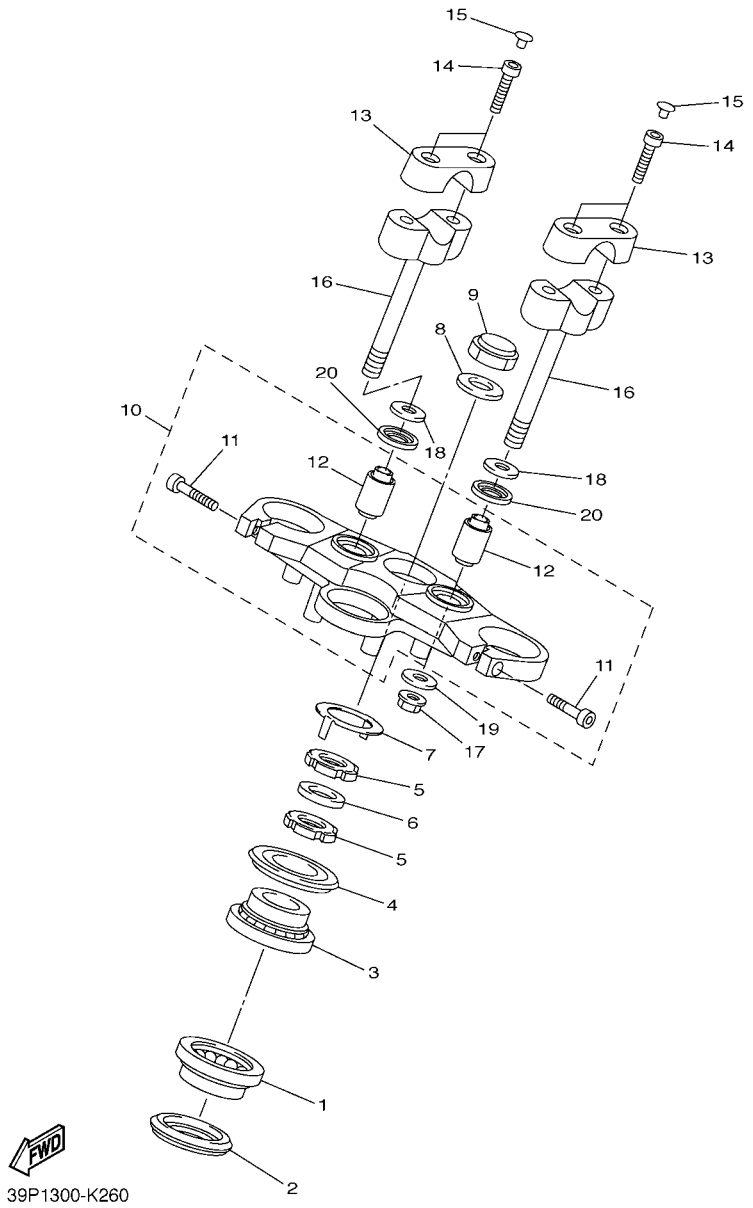

FIG. 26 DIRECCION

REF. Nº	CODIGO Nº	DESCRIPCION	39P1					OBSERVACIONES
1	93399–99957	COJINETE	1					
2	3FV–23462–00	SELLO PARA POLVO	1					
3	93399–99932	COJINETE	1					
4	4XV–23415–01	CUBIERTA DE PISTA DE BOLAS 1	1					
5	90179–30006	TUERCA	2					
6	90202–30235	ARANDELA DE PLANA	1					
7	4XV–23418–00	ARANDELA ESPECIAL	1					
8	90201–281U8	ARANDELA PLANA	1					
9	90176–28083	TUERCA CORONA	1					
10	39P–23405–00	PLATINA SUPERIOR	1					
11	91312–08030	.TORNILLO	2					
12	3VD–23434–00	.SOPORTE DE AMORTIGUADOR	2					
13	4H7–23441–01–P6	SOPORTE DE MANUBRIO	2					MBL2
14	91312–08030	TORNILLO	4					
15	90338–06004	TAPON	4					
16	3Y6–23442–00–P2	SOPORTE DE MANUBRIO INFERIOR	2					MBL2
17	95602–10200	TUERCA DE AUTO-CIERRE	2					
18	92902–10200	ARANDELA	2					
19	90201–10065	ARANDELA PLANA	2					
20	39P–23445–00	AMORTIGUADOR	2					

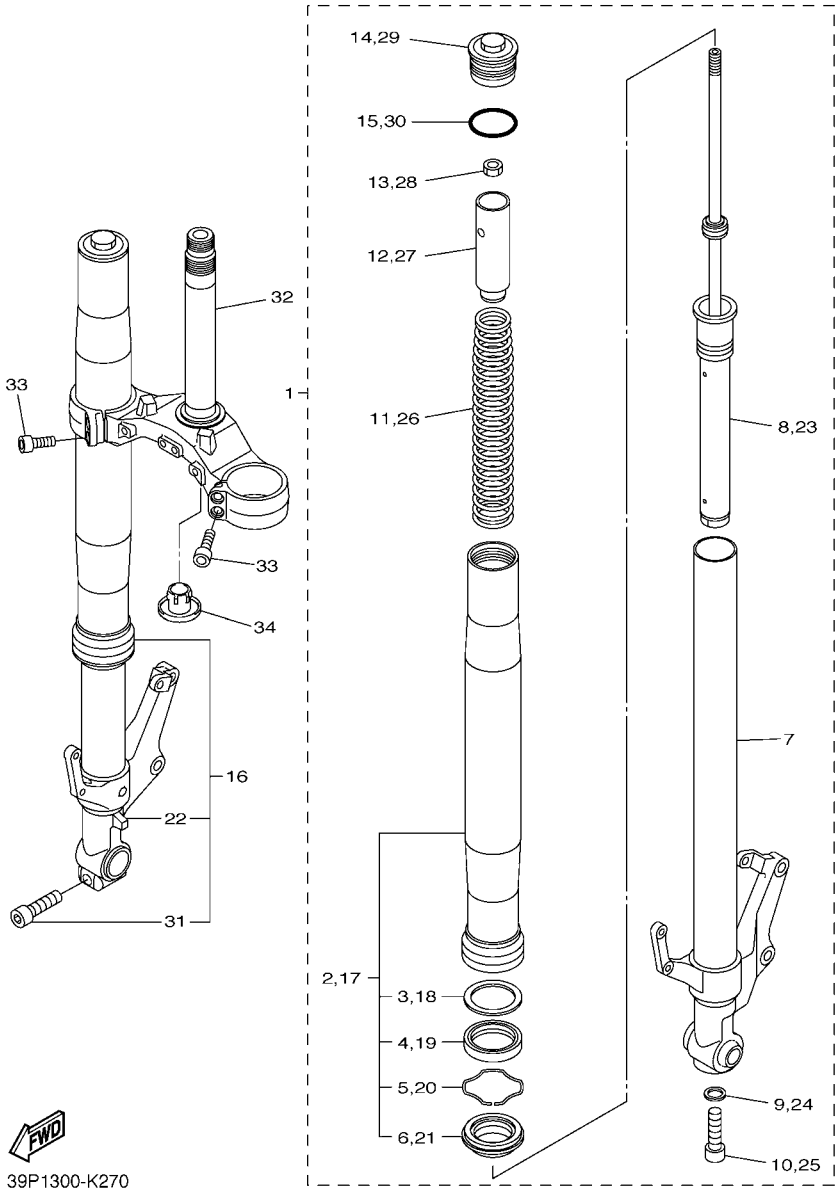

FIG. 27 HORQUILLA DELANTERA

REF. Nº	CODIGO Nº	DESCRIPCION	39P1					OBSERVACIONES
1	39P–23102–00	HORQUILLA DELANTERA COMPL.(MI)	1					
2	2D1–23136–10	.TUBO EXTERIOR	1					
3	4V4–23146–L0	..ARANDELA DE SELLO DE ACEITE	1					
4	4PU–23145–01	..RETEN DE ACEITE	1					
5	4V4–23153–L0	..ANILLO DE ENGANCHE	1					
6	4PU–23144–00	..GUARDAPOLVO	1					
7	39P–23110–00	.TUBO INTERIOR COMPLETO 1	1					
8	39P–23170–00	.CILINDRO COMPL DE HORQ DELANT	1					
9	509–23158–L0	.EMPAQUE	1					
10	278–23181–50	.TORNILLO CABEZAHEXAGONAL	1					
11	39P–23141–00	.RESORTE HORQUILLA DELANT.	1					
12	5VY–23118–00	.SEPARADOR	1					
13	3LC–23357–00	.TUERCA	1					
14	39P–23111–00	.PERNO DE TAPA	1					
15	39P–23147–00	.ARO	1					
16	39P–23103–00	HORQUILLA DELANTERA COMPL.(MD)	1					
17	2D1–23136–10	.TUBO EXTERIOR	1					
18	4V4–23146–L0	..ARANDELA DE SELLO DE ACEITE	1					
19	4PU–23145–01	..RETEN DE ACEITE	1					
20	4V4–23153–L0	..ANILLO DE ENGANCHE	1					
21	4PU–23144–00	..GUARDAPOLVO	1					
22	39P–23120–00	.TUBO INTERIOR COMPLETO 2	1					
23	39P–23170–10	.CILINDRO COMPL DE HORQ DELANT	1					
24	509–23158–L0	.EMPAQUE	1					
25	278–23181–50	.TORNILLO CABEZAHEXAGONAL	1					
26	39P–23141–00	.RESORTE HORQUILLA DELANT.	1					
27	5VY–23118–00	.SEPARADOR	1					

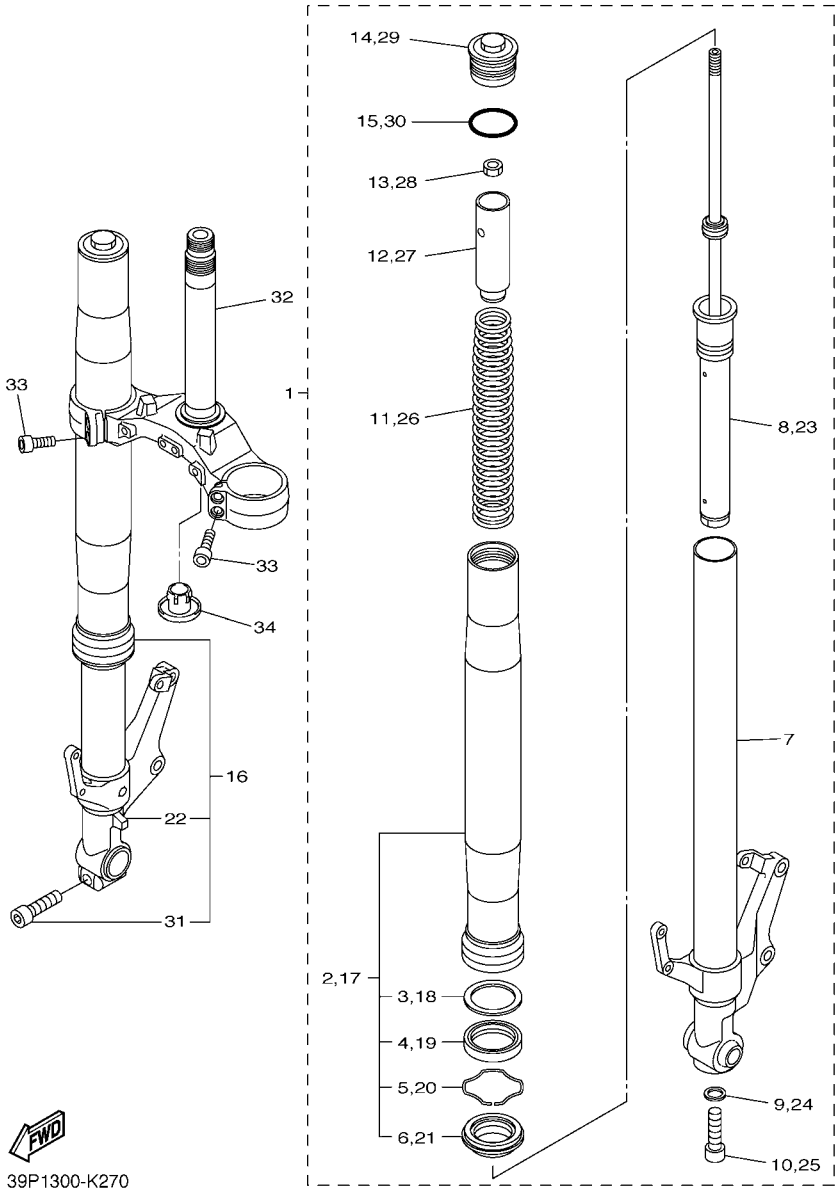

FIG. 27 HORQUILLA DELANTERA

REF. Nº	CODIGO Nº	DESCRIPCION	39P1					OBSERVACIONES
28	3LC–23357–00	.TUERCA	1					
29	39P–23111–00	.PERNO DE TAPA	1					
30	39P–23147–00	.ARO	1					
31	91314–08040	.TORNILLO ALLEN	1					
32	39P–23340–00	PLATINA INFERIOR COMPLETA	1					
33	91312–08030	TORNILLO	4					
34	4KM–23123–01	CUBIERTA INFERIOR	1					

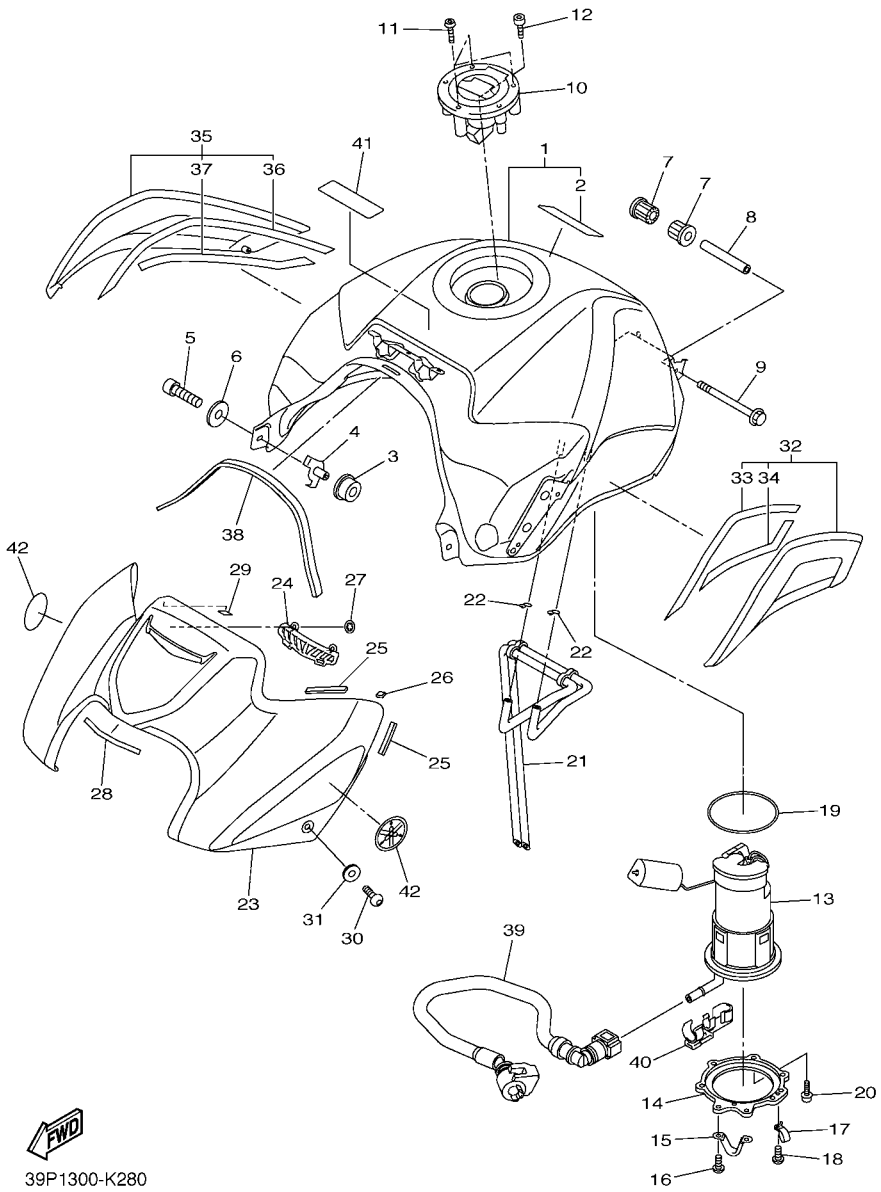

FIG. 28 DEPOSITO DE COMBUSTIBLE

REF. Nº	CODIGO Nº	DESCRIPCION	39P1					OBSERVACIONES
1	39P–Y2410–00–01	DEPOSITO DE COMBUSTIBLE COMP.	1					UR PARA SMX
	39P–Y2410–00–02	DEPOSITO DE COMBUSTIBLE COMP.	1					UR PARA BWC1
	39P–Y2410–00–03	DEPOSITO DE COMBUSTIBLE COMP.	1					UR PARA DPBMC
2	39P–24161–00	.EMBLEMA 1	1					UR PARA SMX
	39P–24161–10	.EMBLEMA 1	1					UR PARA BWC1
	39P–24161–20	.EMBLEMA 1	1					UR PARA DPBMC
3	5VY–24181–00	AMORTIGUADOR DE MONTAJE 1	2					
4	2D1–2412G–00	COLLAR	2					
5	91312–06016	TORNILLO	2					
6	90201–06086	ARANDELA PLANA	2					
7	5SL–24183–00	AMORTIGUADOR DE MONTAJE 3	2					
8	90387–06055	ESPACIADOR	1					
9	95022–06090	PERNO, DE BRIDA	1					
10	5JJ–24602–00	TAPON COMPLETO	1					
11	90110–05112	TORNILLO ALLEN	3					
12	91312–05010	TORNILLO	1					
13	39P–13907–00	BOMBA DE COMBUSTIBLE COMPLETA	1					
14	39P–24491–00	SOPORTE BOMBA COMBUSTIBLE	1					
15	2D1–24192–00	SOPORTE DE DEPOSITO COMBUST.2	1					
16	98902–05008	TORNILLO DE AJUSTE	2					
17	90461–10010	GRAPA	1					
18	90154–05035	TORNILLO DE LIGAR	1					
19	5JW–24486–00	ANILLO O	1					
20	90110–05028	TORNILLO ALLEN	6					
21	39P–24317–00	TUBO 7	1					
22	90467–09006	PRESILLA	2					
23	39P–2171A–00–P0	CUBIERTA, TECHO	1					UR PARA SMX

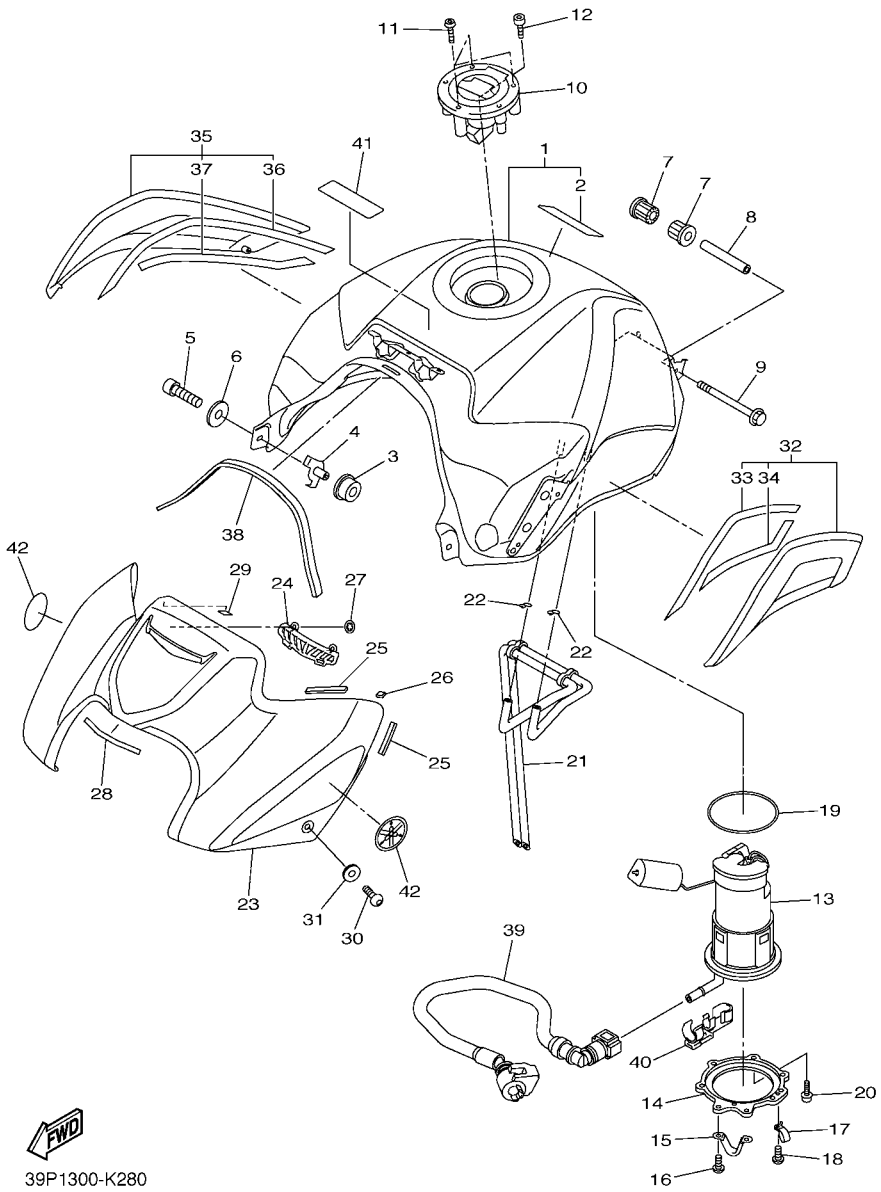

FIG. 28 DEPOSITO DE COMBUSTIBLE

REF. Nº	CODIGO Nº	DESCRIPCION	39P1					OBSERVACIONES
23	39P–2171A–00–P1	CUBIERTA, TECHO	1					UR PARA BWC1
	39P–2171A–00–P2	CUBIERTA, TECHO	1					UR PARA DPBMC
24	39P–241B1–00	TAPA DE TANQUE	1					
25	4XV–2834E–00	AMORTIGUADOR 3	4					
26	14B–24181–00	AMORTIGUADOR DE MONTAJE 1	2					
27	90183–05M02	TUERCA DE RESORTE	2					
28	39P–28307–00	SELLO	1					
29	1D7–15379–00	SELLO DE CARTER	2					
30	90111–05019	TORNILLO	4					
31	90202–05224	ARANDELA DE PLANA	4					
32	39P–24106–00	CUBIERTA LATERAL COMPLETA 1	1					
33	39P–241A3–00	.SELLO 3	1					
34	39P–241A5–00	.SELLO 5	1					
35	39P–24108–00	CUBIERTA LATERAL COMPLETA 2	1					
36	39P–241A4–00	.SELLO 4	1					
37	39P–241A6–00	.SELLO 6	1					
38	2D1–2414P–00	EQUILIBRIO, CUBIERTA	1					
39	39P–13971–00	ANILLO DE ESPACIADOR	1					
40	90464–16005	BRIDA	1					
41	1CA–21568–00	ETIQUETA DE PRECAUCION	1					
42	5SL–2413B–00	EMBLEMA	2					

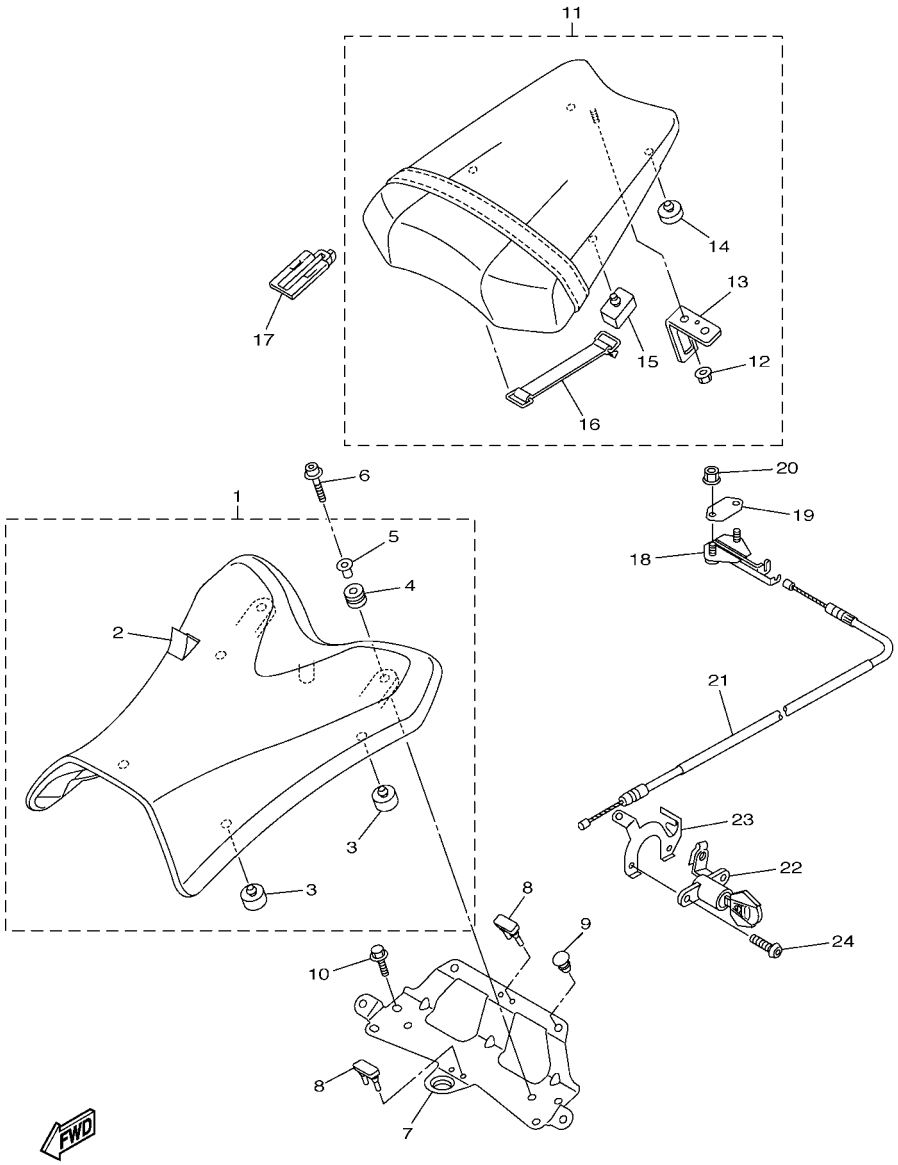

39P1300-K290

FIG. 29 ASIENTO

REF. Nº	CODIGO Nº	DESCRIPCION	39P1					OBSERVACIONES
1	39P–24710–00	ASIENTO SIMPLE COMPLETO	1					
2	39P–2470F–00	.FUNDADE SILLIN	1					
3	278–27114–00	.TOPE DE PUNTAL PRINCIPAL	4					
4	90480–14604	.TAPON	2					
5	90387–07391	.ESPACIADOR	2					
6	90110–06232	TORNILLO ALLEN	2					
7	39P–21349–00	SOPORTE DE ASIENTO	1					
8	682–44532–00	RETEN	2					
9	90338–07043	TAPON	2					
10	95022–06010	PERNO, DE BRIDA	4					
11	39P–24750–00	ASIENTO TANDEM COMPLETO	1					
12	95702–06500	.TUERCA DE BRIDA	1					
13	4NK–24728–00	.SOPORTE DE ASIENTO	1					
14	22W–24741–00	.COJIN DE ASIENTO	2					
15	39P–24741–00	.COJIN DE ASIENTO	2					
16	18G–82131–00	.TIRANTE DE BATERIA	1					
17	39P–24768–00	TOPE	1					
18	4BP–24780–00	CERRADURA SILLIN COMPLETO	1					
19	4BP–24792–00	PLACA	1					
20	95702–06500	TUERCA DE BRIDA	2					
21	2D1–2478E–00	CABLE	1					
22	2TV–W2470–00	JUEGO DE ROTOR	1					
23	4XV–2117K–00	SOPORTE DE CERRADURA	1					
24	90149–06134	TORNILLO DE REGLAJE	2					

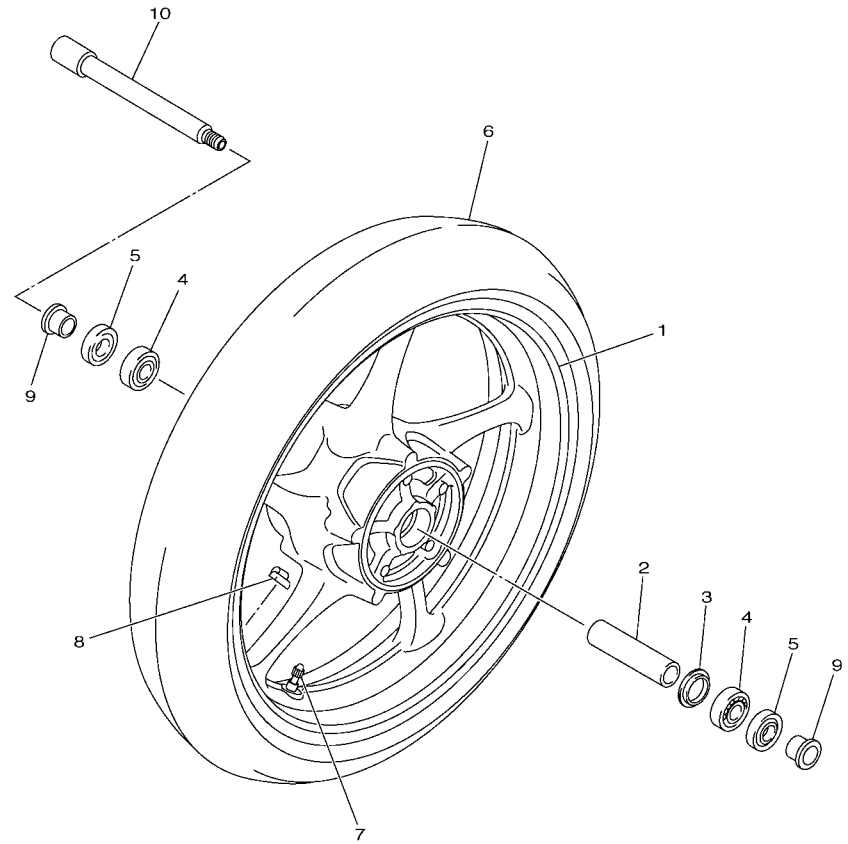

39P1300-K300

FIG. 30 RUEDA DELANTERA

REF. Nº	CODIGO Nº	DESCRIPCION	39P1					OBSERVACIONES
1	39P–25168–00–98	RUEDA FUNDIDA DELANTERA	1					PARA SMX
	39P–25168–00–8L	RUEDA FUNDIDA DELANTERA	1					PARA BWC1,DPBMC
2	20S–25117–00	ESPACIADOR DE COJINETE	1					
3	146–25315–00	SEPARADOR	1					
4	93306–20352	COJINETE	2					
5	93102–25017	SELLO ACEITE	2					
6	94112–17109	NEUMATICO (120/70ZR17M/C 58W)	1					BRIDGESTONE
7	93900–00030	VALVULA DE ARO (TR412)	1					TAIHEIYO
8	5MT–25398–00	BALANCEADOR DE RUEDA (10G)	1					UN
	5MT–25398–10	BALANCEADOR DE RUEDA (20G)	1					UN
	5MT–25398–20	BALANCEADOR DE RUEDA (30G)	1					UN
9	20S–25183–00	COLLAR DE RUEDA	2					
10	39P–25181–00	EJE DE LA RUEDA	1					

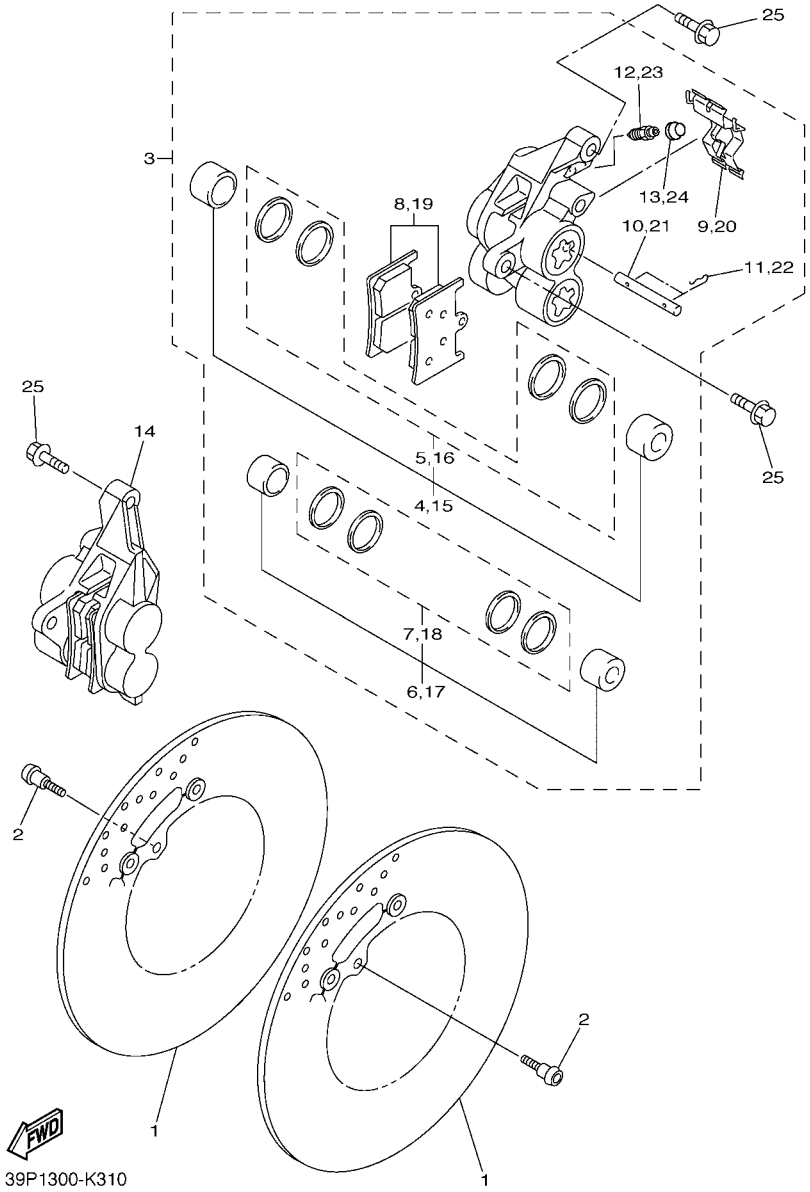

FIG. 31 CALIBRE FRENO DELANTERA

REF. Nº	CODIGO Nº	DESCRIPCION	39P1					OBSERVACIONES
1	39P–2581T–00	DISCO DE FRENO	2					
2	90109–064G6	PERNO	10					
3	39P–2580T–00	CALIBRE COMPLETO (IZQUIERDO)	1					
4	4SV–W0057–10	.PISTON COMPLETO PINZA	1					
5	3GM–W0047–10	..JUEGO DE RETENES DE PINZA	1					
6	4SV–W0057–00	.PISTON COMPLETO PINZA	1					
7	3MA–W0047–10	..JUEGO DE RETENES DE PINZA	1					
8	39P–W0045–00	.JUEGO DE COJIN DE FRENO	1					
9	13S–25919–00	.SOPORTE DE PASTILLAS	1					
10	4SV–25924–00	.PASADOR	1					
11	3GM–25925–00	.PRESILLA	2					
12	1J3–25824–00	.TORNILLO DE RESPIRADERO	1					
13	306–25825–01	.TAPA	1					
14	39P–2580U–00	CALIBRE COMPLETO (DERECHO)	1					
15	4SV–W0057–10	.PISTON COMPLETO PINZA	1					
16	3GM–W0047–10	..JUEGO DE RETENES DE PINZA	1					
17	4SV–W0057–00	.PISTON COMPLETO PINZA	1					
18	3MA–W0047–10	..JUEGO DE RETENES DE PINZA	1					
19	39P–W0045–00	.JUEGO DE COJIN DE FRENO	1					
20	13S–25919–00	.SOPORTE DE PASTILLAS	1					
21	4SV–25924–00	.PASADOR	1					
22	3GM–25925–00	.PRESILLA	2					
23	1J3–25824–00	.TORNILLO DE RESPIRADERO	1					
24	306–25825–01	.TAPA	1					
25	90105–10638	TORNILLO	4					

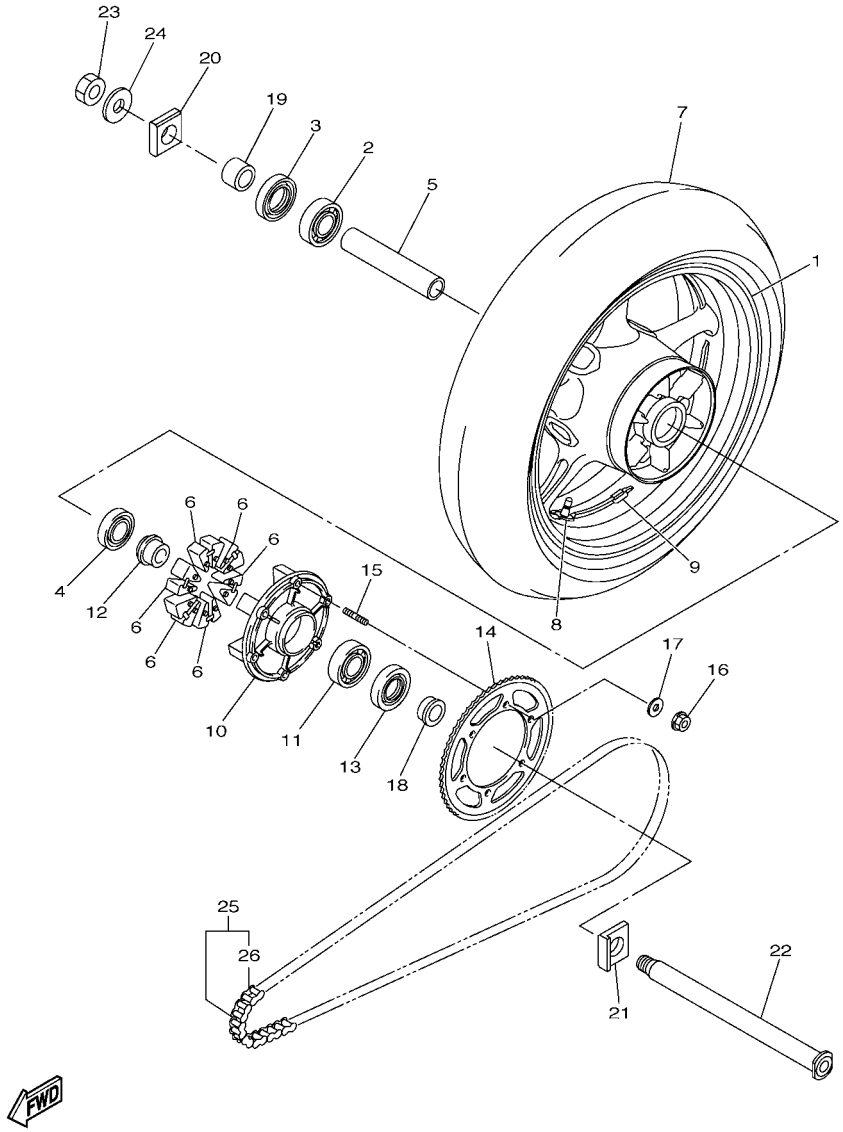

39P1300-K320

FIG. 32 RUEDA TRASERA

REF. Nº	CODIGO Nº	DESCRIPCION	39P1					OBSERVACIONES
1	39P–25338–00–98	RUEDA FUNDIDA TRASERA	1					PARA SMX
	39P–25338–00–8L	RUEDA FUNDIDA TRASERA	1					PARA BWC1,DPBMC
2	93306–20531	COJINETE	1					
3	93106–40013	SELLO ACEITE	1					
4	93306–07806	COJINETE	1					
5	39P–25317–00	ESPACIADOR DE COJINETE	1					
6	5EA–25364–00	AMORTIGUADOR	6					
7	94118–17072	NEUMATICO (180/55ZR17M/C)	1					BRIDGESTONE
8	93900–00030	VALVULA DE ARO (TR412)	1					TAIHEIYO
9	5MT–25398–00	BALANCEADOR DE RUEDA (10G)	1					UN
	5MT–25398–10	BALANCEADOR DE RUEDA (20G)	1					UN
	5MT–25398–20	BALANCEADOR DE RUEDA (30G)	1					UN
10	20S–25366–00	EMBRAGUE DE MASA	1					
11	93306–20659	COJINETE	1					
12	4FM–25377–00	COLLAR DE RUEDA	1					
13	93106–40041	SELLO ACEITE	1					
14	39P–25446–00	CORONA (46T)	1					
15	90116–10048	ESPARRAGO	6					
16	90185–10012	TUERCA AUTOBLOCANTE	6					
17	90201–10021	ARANDELA PLANA	6					
18	90387–28015	ESPACIADOR	1					
19	90387–28014	ESPACIADOR	1					
20	5VY–25388–00	TIRADOR DE CADENA 1	1					
21	5VY–25389–01	TIRADOR DE CADENA 2	1					
22	2D1–25381–00	EJE DE RUEDA	1					
23	90185–24007	TUERCA AUTOBLOCANTE	1					
24	90201–25020	ARANDELA PLANA	1					

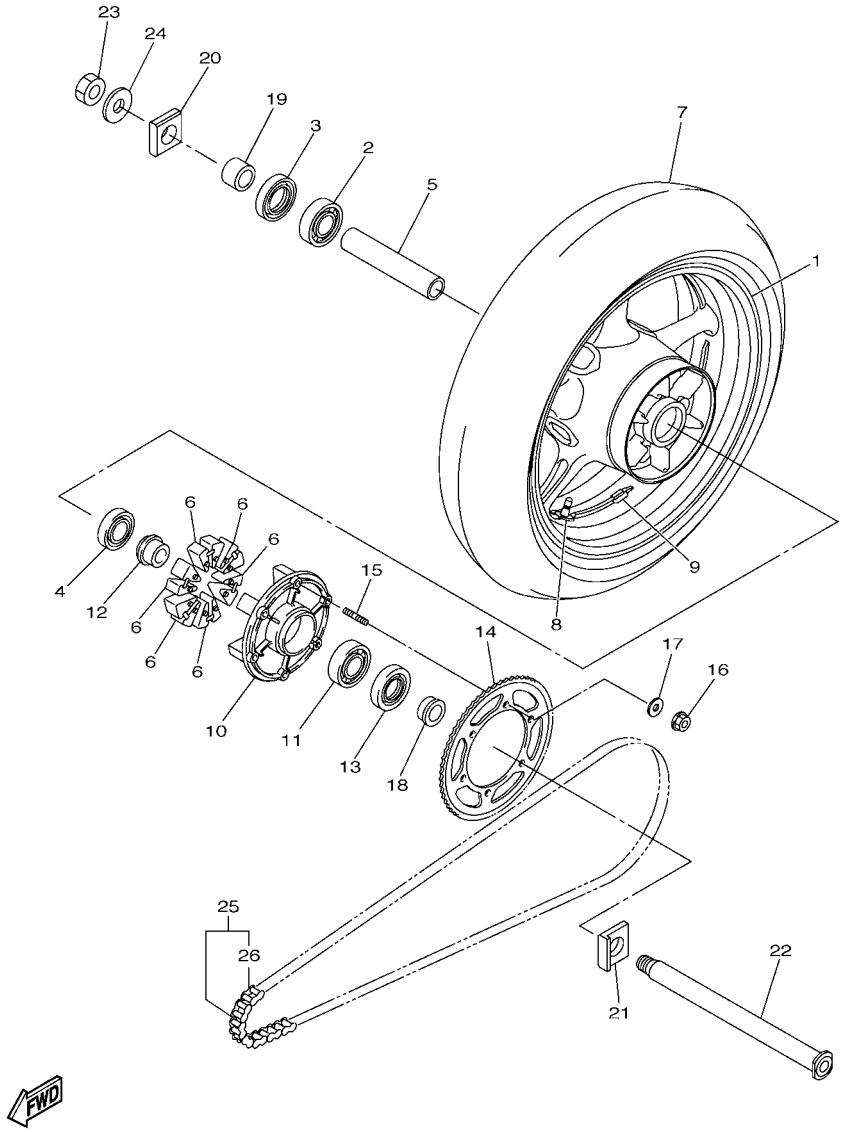

39P1300-K320

FIG. 32 RUEDA TRASERA

REF. Nº	CODIGO Nº	DESCRIPCION	39P1					OBSERVACIONES
25	94582–31122	CADENA (DID 525V10-121LL)	1					
26	94682–31031	.JUNTA, DE CADENA(DID525V10-ZJ)	1					

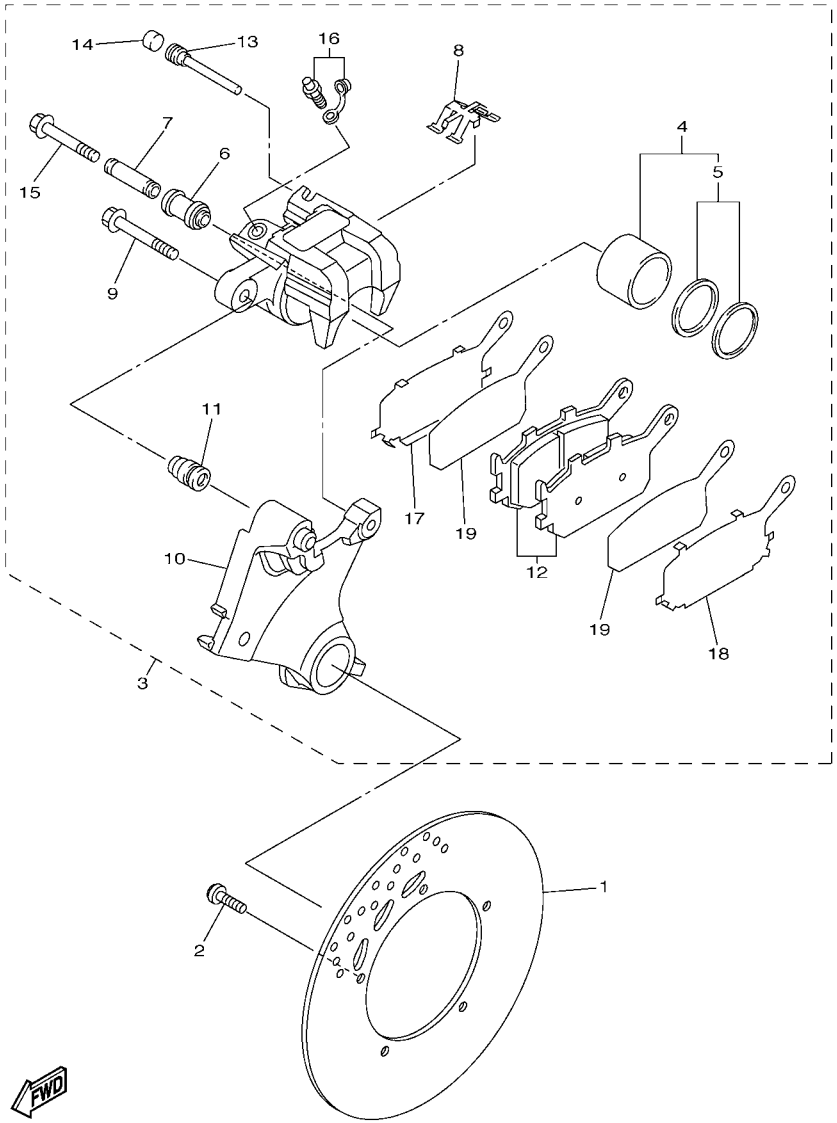

39P1300-K330

FIG. 33 CALIBRE FRENO TRASERA

REF. Nº	CODIGO Nº	DESCRIPCION	39P1					OBSERVACIONES
1	39P–2582W–00	DISCO DE FRENO TRASEROS 2	1					
2	90109–083G4	PERNO	5					
3	39P–2580W–00	CALIBRE COMPLETO TRASEROS 2	1					
4	5SL–W0057–00	.PISTON COMPLETO PINZA	1					
5	5SL–W0047–00	..JUEGO DE RETENES DE PINZA	1					
6	5SL–25917–00	.FUNDA DE CALIBRE	1					
7	5SL–25838–00	.CASQUILLO DE CALIBRE	1					
8	5SL–25919–00	.SOPORTE DE PASTILLAS	1					
9	5SL–25914–00	.PASADOR	1					
10	39P–25921–50	.MENSULA DE SOPORTE	1					
11	3JD–25917–00	.FUNDA DE CALIBRE	1					
12	5VX–W0046–00	.JUEGO DE PASTILLAS DE FRENO 2	1					
13	8CR–25924–00	.PASADOR	1					
14	5DH–25916–00	.TAPON	1					
15	5SL–25926–00	.PERNO	1					
16	1UY–W0048–00	.CJTO TORNILLO DE PURGA	1					
17	5SL–25827–00	.CUNA DE CALIBRE	1					
18	5SL–25827–10	.CUNA DE CALIBRE	1					
19	5SL–25828–01	.CUNA DE CALIBRE	2					

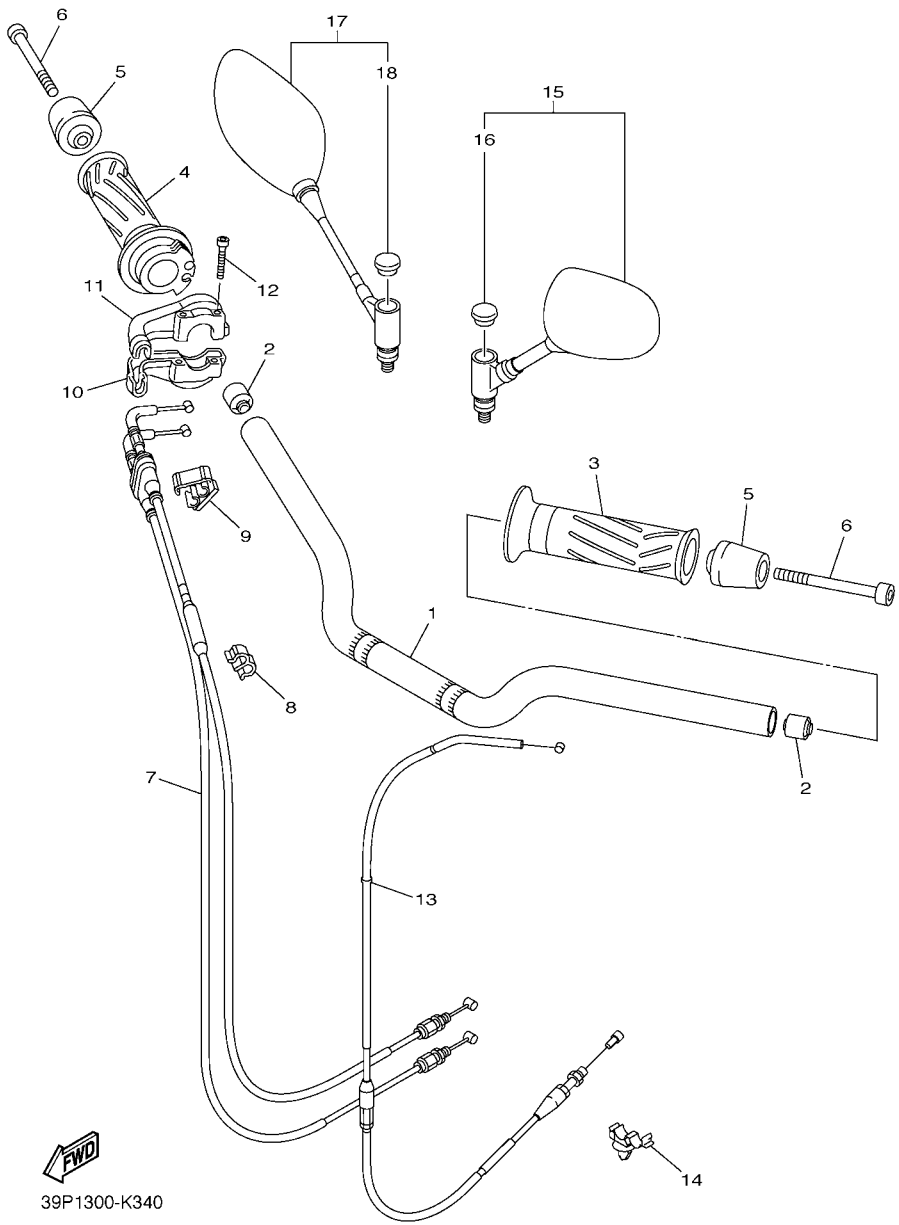

FIG. 34 MANILLAR & CABLE

REF. Nº	CODIGO Nº	DESCRIPCION	39P1					OBSERVACIONES
1	39P–26111–00	MANUBRIO	1					
2	4JH–23434–00	SOPORTE DE AMORTIGUADOR	2					
3	4YR–26241–02	EMPUNADURA (IZQUIERDO)	1					
4	4YR–26240–02	EMPUNADURA COMPLETA	1					
5	39P–26246–00	EXTREMO DE EMPUNADURA	2					
6	91317–06050	PERNO	2					
7	39P–26302–00	CABLE DE ACELERADOR COMPLETO	1					
8	90468–15139	PRESILLA	1					
9	39P–2627E–00	GRAMPA	1					
10	4KG–26281–00	TAPA DE EMPUNADURA SUPERIOR	1					
11	3XW–26282–01	TAPA, EMPUNADURA PLATINA	1					
12	91317–05035	PERNO	2					
13	2D1–26335–00	CABLE DE EMBRAGUE	1					
14	90464–10008	BRIDA	1					
15	20S–26280–00	ESPEJO COMPLETO (IZQUIERDO)	1					
16	5PS–26133–20	.TAPA	1					
17	20S–26290–00	ESPEJO COMPLETO (DERECHO)	1					
18	5PS–26133–20	.TAPA	1					

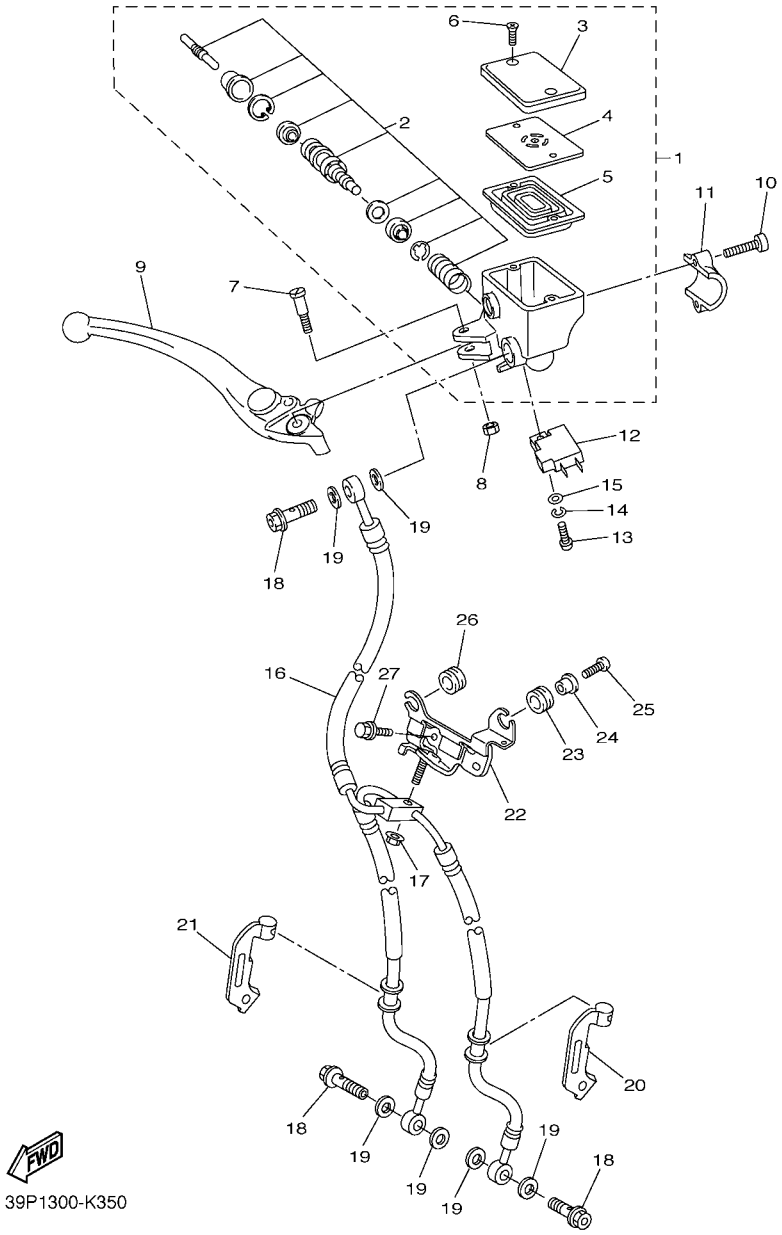

FIG. 35 CILINDRO MAESTRO DELANTERO

REF. Nº	CODIGO Nº	DESCRIPCION	39P1					OBSERVACIONES
1	2D1–W2587–00	CILINDRO MAESTRO SUB COMPLET	1					
2	2D1–W0041–00	.JUEGO DE CILINDRO MAESTRO	1					
3	5VS–25852–00	.TAPA DE TANQUE DE RESERVA	1					
4	5VS–25855–00	.BUJE DE DIAFRAGMA	1					
5	20S–25854–00	.EMPAQUE,DIAFRAGMA	1					
6	5VS–2589H–00	.TORNILLO	2					
7	5VS–2589F–00	PERNO DE PALANCA	1					
8	95617–06100	TUERCAAUTOBLOCANTE	1					
9	5VS–83922–00	PALANCA 2	1					
10	5VS–26332–00	PERNO	2					
11	5VS–25867–00	SOPORTE DE CILINDRO MAESTRO	1					
12	4HM–83980–00	INTERRUP. DE PARADA DELANTERO	1					
13	98502–04012	TORNILLO	1					
14	92902–04100	ARANDELA	1					
15	92902–04600	ARANDELA	1					
16	39P–25872–00	MANGUERA DE FRENO 1	1					
17	95702–06500	TUERCA DE BRIDA	1					
18	90401–10020	PERNO DE UNION	3					
19	90430–10005	JUNTA	6					
20	2D1–25875–00	SOPORTE DE MANGUERA FRENO 1	1					
21	2D1–25876–00	SOPORTE DE MANGUERA FRENO 2	1					
22	39P–84118–00	APOYO DE FARO DELANTERO 1	1					
23	90480–14004	TAPON	1					
24	90387–06M60	ESPACIADOR	1					
25	90149–06302	TORNILLO DE REGLAJE	1					
26	90480–13005	TAPON	1					
27	95802–06014	TORNILLO DE REBORDE	2					

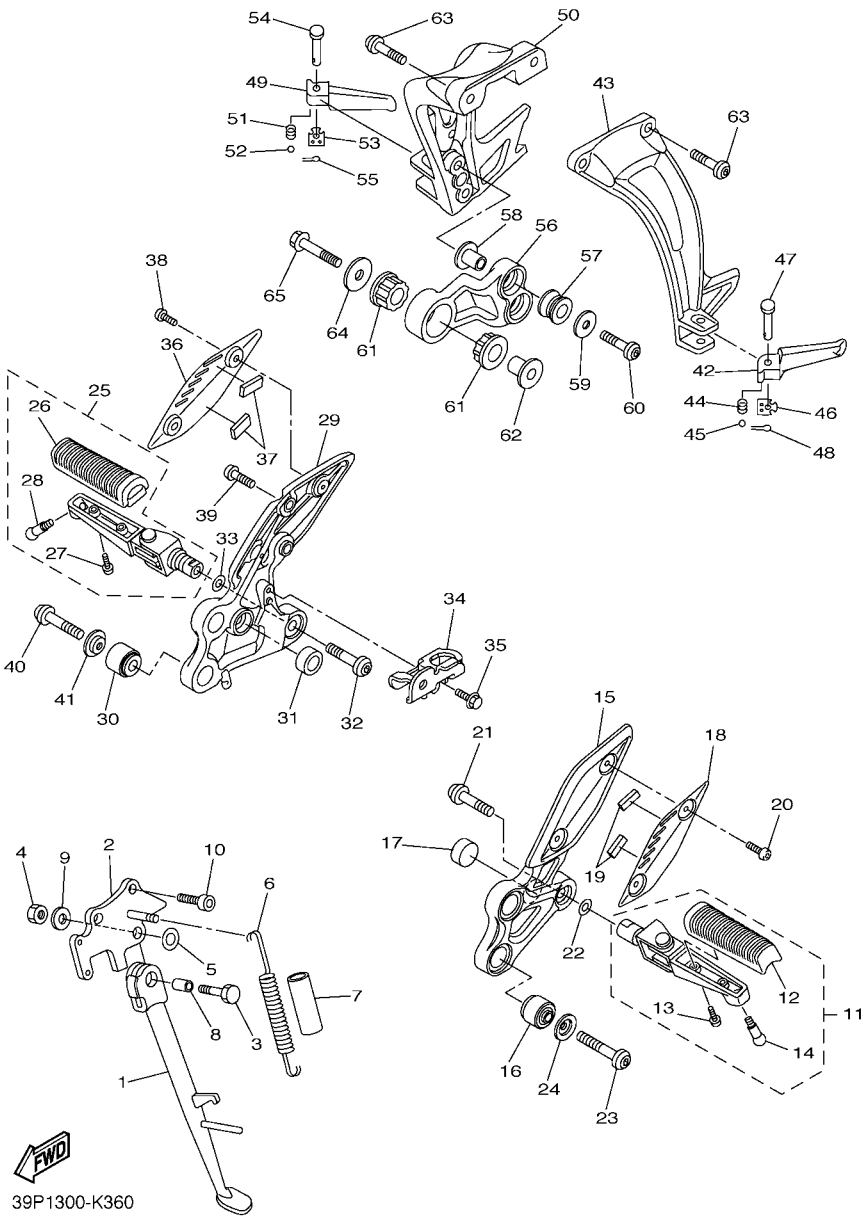

FIG. 36 SOPORTE & APOYAPIE

REF. Nº	CODIGO Nº	DESCRIPCION	39P1					OBSERVACIONES
1	39P–27311–00	PUNTAL LATERAL	1					
2	2D1–27321–00	SOPORTE DE PUNTAL LATERAL	1					
3	90101–10025	TORNILLO	1					
4	90185–10023	TUERCA AUTOBLOCANTE	1					
5	90201–16027	ARANDELA PLANA	1					
6	90506–18020	RESORTE DE TENSION	1					
7	90445–19002	TUBO (L60)	1					
8	90387–10050	ESPACIADOR	1					
9	90201–10035	ARANDELA PLANA	1					
10	90110–10028	TORNILLO ALLEN	2					
11	39P–27410–00	APOYAPIE DELANTERO (MI)	1					
12	4BP–27413–00	.CUBIERTA DE APOYAPIE	1					
13	90157–05025	.TORNILLO CABEZA CONICA PLANA	2					
14	90109–08203	.PERNO	1					
15	39P–27442–00	SOPORTE 2	1					
16	1NL–27424–00	AMORTIGUADOR DE APOYAPIE 2	2					
17	5VX–27114–00	TOPE DE PUNTAL PRINCIPAL	1					
18	39P–27486–00	CUBIERTA 1	1					
19	1HX–27415–00	PLACA	2					
20	90111–05015	TORNILLO	2					
21	90111–10039	TORNILLO	1					
22	90206–17084	ARANDELA ONDULADA	1					
23	90110–08071	TORNILLO ALLEN	2					
24	90209–08295	ARANDELA DE SEPARACION	2					
25	39P–27420–00	APOYAPIE DELANTERO (MD)	1					
26	4BP–27413–00	.CUBIERTA DE APOYAPIE	1					
27	90157–05025	.TORNILLO CABEZA CONICA PLANA	2					

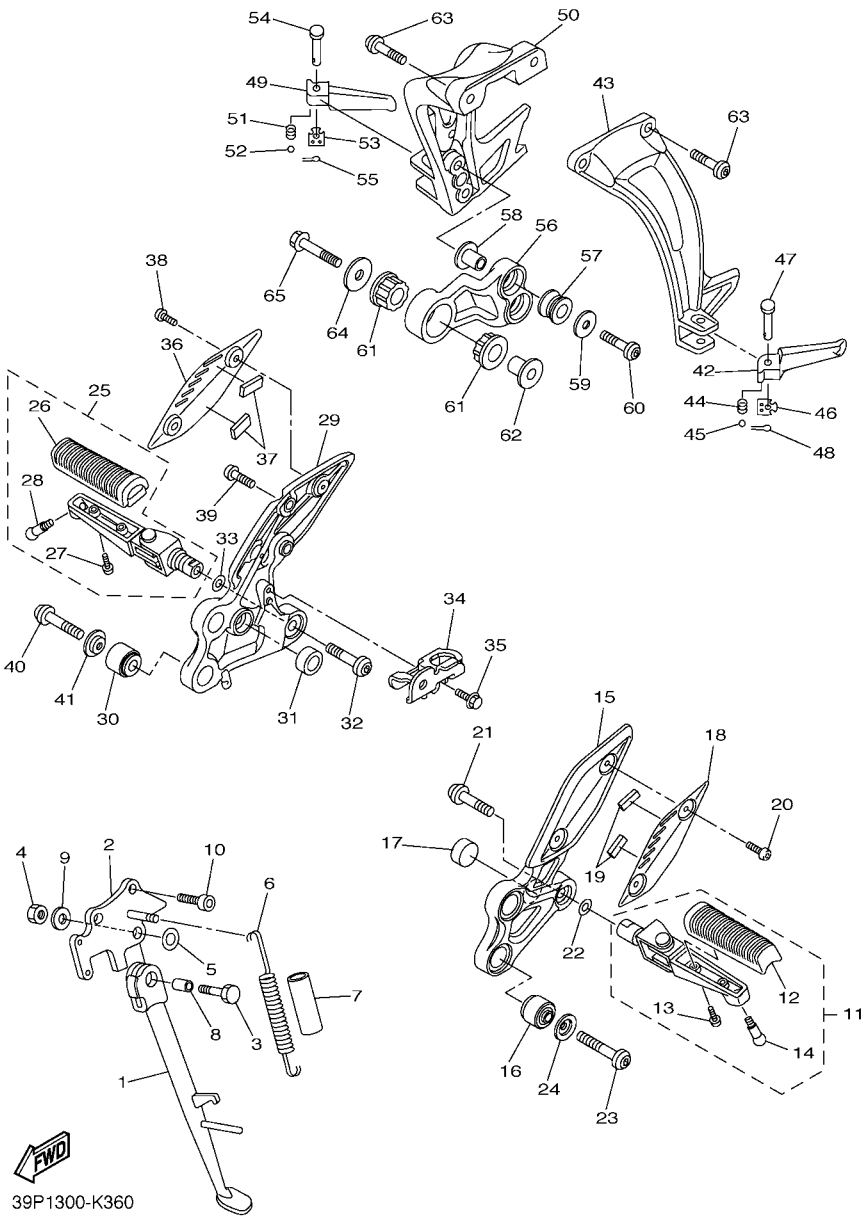

FIG. 36 SOPORTE & APOYAPIE

REF. Nº	CODIGO Nº	DESCRIPCION	39P1					OBSERVACIONES
28	90109–08203	.PERNO	1					
29	39P–27443–00	SOPORTE 3	1					
30	1NL–27424–00	AMORTIGUADOR DE APOYAPIE 2	2					
31	5VX–27114–00	TOPE DE PUNTAL PRINCIPAL	1					
32	90111–10039	TORNILLO	1					
33	90206–17084	ARANDELA ONDULADA	1					
34	39P–2144G–00	SOPORTE DE INTERRUPTOR	1					
35	95802–06008	TORNILLO DE REBORDE	1					
36	39P–27487–00	CUBIERTA 2	1					
37	1HX–27415–00	PLACA	2					
38	90111–05015	TORNILLO	2					
39	92017–08020	PERNO	2					
40	90110–08071	TORNILLO ALLEN	2					
41	90209–08295	ARANDELA DE SEPARACION	2					
42	3VR–27431–01	APOYAPIE POSTERIOR 1	1					
43	2D1–2741L–10	MENSULA 4	1					
44	90501–12743	RESORTE DE COMPRESION	1					
45	93501–04011	BOLA	1					
46	5VX–27437–00	ARANDELA ESPECIAL	1					
47	91702–08040	PASADOR DE ADRAZADERA	1					
48	91401–25015	CHAVETA	1					
49	3VR–27441–01	APOYAPIE POSTERIOR 2	1					
50	39P–2742L–00	MENSULA 5	1					
51	90501–12743	RESORTE DE COMPRESION	1					
52	93501–04011	BOLA	1					
53	5VX–27437–00	ARANDELA ESPECIAL	1					
54	91702–08040	PASADOR DE ADRAZADERA	1					

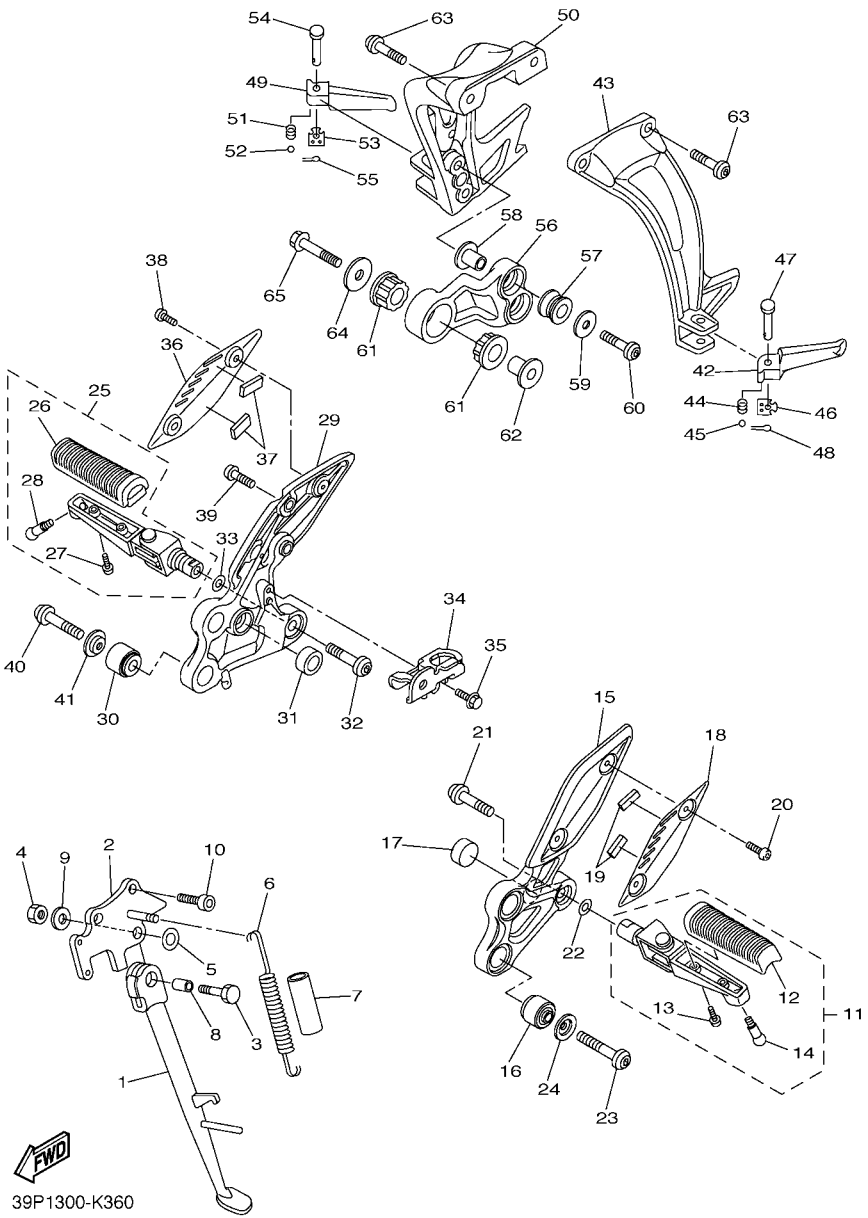

FIG. 36 SOPORTE & APOYAPIE

REF. Nº	CODIGO Nº	DESCRIPCION	39P1					OBSERVACIONES
55	91401–25015	CHAVETA	1					
56	39P–21436–00	SOPORTE	1					
57	5BE–14747–00	AMORTIGUADOR DE SILENCIADOR	2					
58	90387–08021	ESPACIADOR	2					
59	90201–08054	ARANDELA PLANA	2					
60	92012–08035	PERNO	2					
61	39P–27424–00	AMORTIGUADOR DE APOYAPIE 2	2					
62	90387–10097	ESPACIADOR	1					
63	90109–085G6	PERNO	4					
64	90201–10068	ARANDELA PLANA	1					
65	95814–10045	TORNILLO	1					

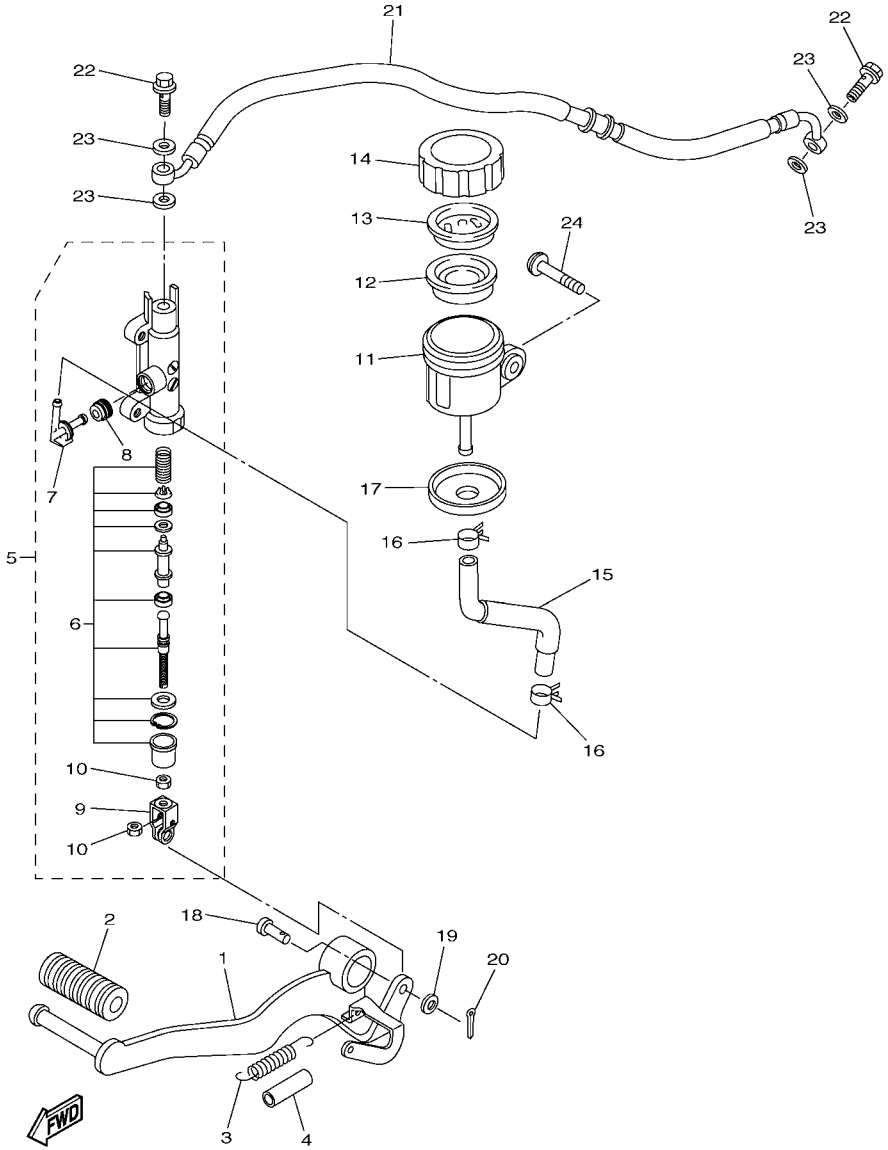

FIG. 37 CILINDRO MAESTRO TRASERO

REF. Nº	CODIGO Nº	DESCRIPCION	39P1					OBSERVACIONES
1	39P–27211–00	PEDAL DE FRENO	1					
2	5EB–18113–00	FUNDA DEL PEDAL DEL CAMBIO	1					
3	90506–20014	RESORTE DE TENSION	1					
4	90446–15386	TUBO RESEIRADERO	1					
5	2D1–2583V–00	CILINDRO, MAESTRO TRASERO	1					
6	5VX–W0042–50	.JUEGO DE CILINDRO MAESTRO	1					
7	2D1–2582A–00	.CONECTOR	1					
8	4BP–2585F–01	.ANILLO O	1					
9	4BP–27222–02	.UNION	1					
10	90170–08010	.TUERCA	2					
11	2D1–25894–00	TANQUE DE RESERVA	1					
12	5SL–25854–00	DIAFRAGMA TANQUE RESERVA	1					
13	5SL–25855–00	BUJE DE DIAFRAGMA	1					
14	5SL–25852–00	TAPA DE TANQUE DE RESERVA	1					
15	39P–25895–00	MANGUERA DE TANQUE DE RESERVA	1					
16	90467–11044	PRESILLA	2					
17	5D0–2583H–00	FUNDA	1					
18	90240–08005	PASADOR CON HOYO	1					
19	90201–08066	ARANDELA PLANA	1					
20	91401–20012	CHAVETA	1					
21	39P–25874–00	MANGUERA DE FRENO	1					
22	90401–10020	PERNO DE UNION	2					
23	90430–10005	JUNTA	4					
24	90111–05026	TORNILLO	1					

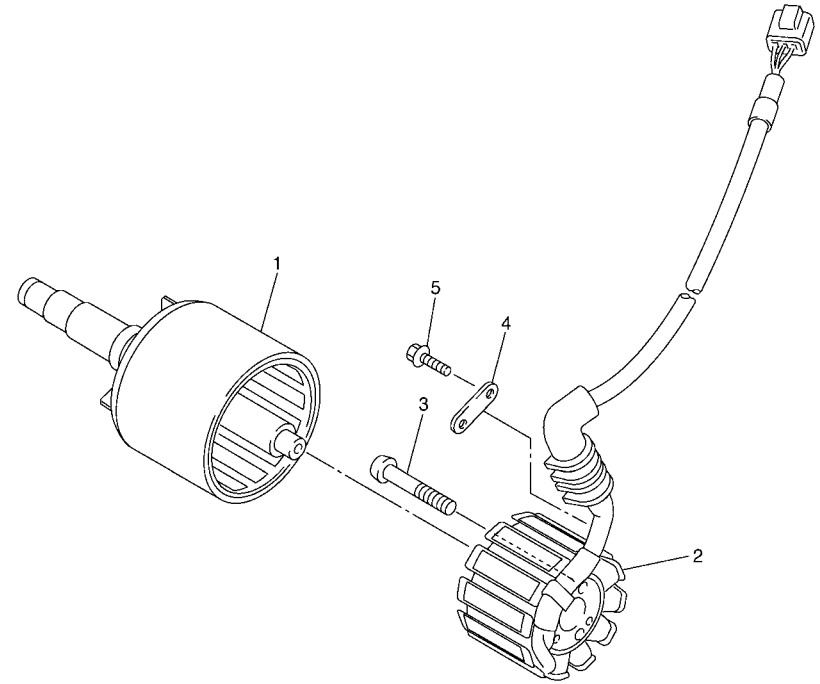

5VY1300-C400

FIG. 38 GENERADOR

REF. Nº	CODIGO Nº	DESCRIPCION	39P1					OBSERVACIONES
1	5VY–81450–00	ROTOR COMPLETO	1					
2	2D1–81410–10	ESTATOR COMPLETO	1					
3	90149–06067	TORNILLO DE REGLAJE	3					
4	4C8–15191–00	PLACA	1					
5	90105–06078	TORNILLO	1					

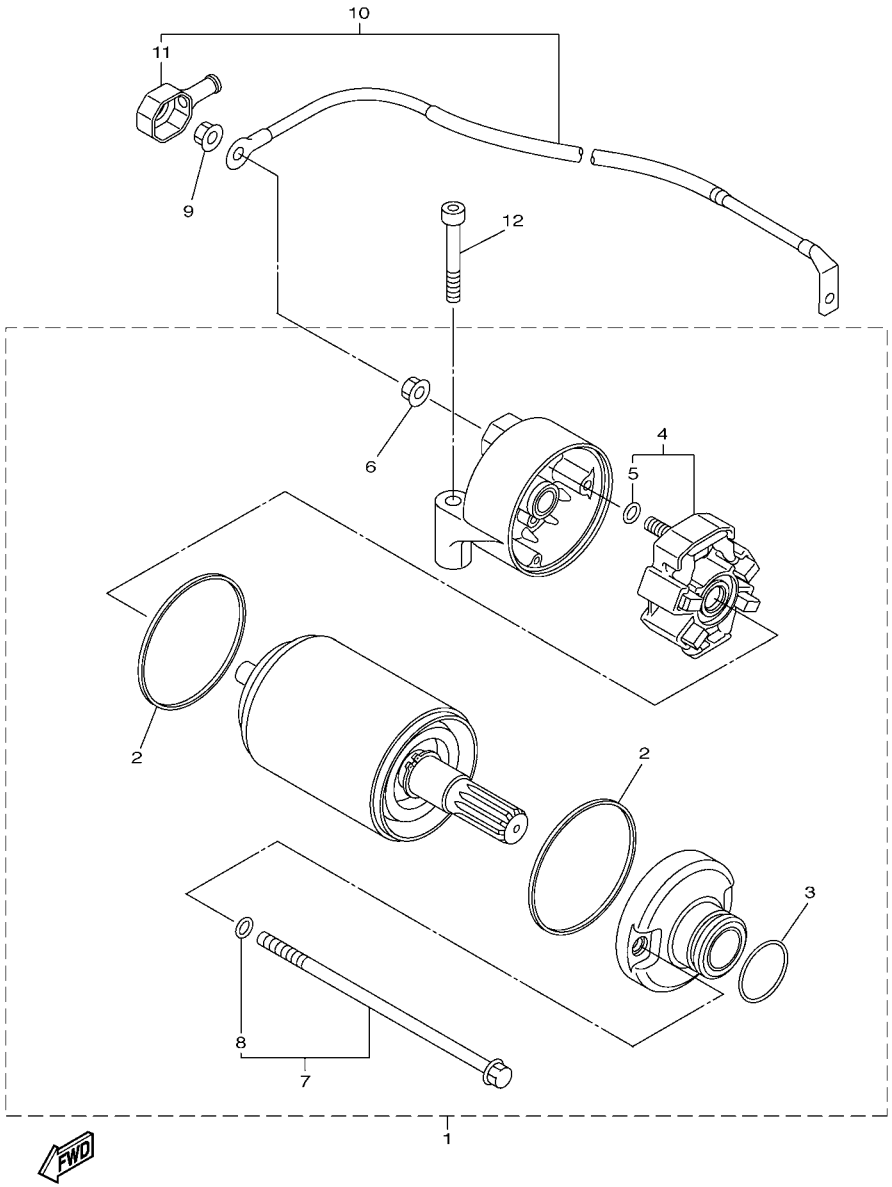

FIG. 39 MOTOR DE ARRANQUE

REF. Nº	CODIGO Nº	DESCRIPCION	39P1					OBSERVACIONES
1	39P–81800–00	MOTOR DE ARRANQUE COMPLETO	1					
2	11H–81844–00	.EMPAQUE	2					
3	1FK–81847–00	.ANILLO GOMA	1					
4	4B5–81840–00	.SOSTEN DE ESCOBILLA COMPLETO	1					
5	3TB–81847–00	..ANILLO GOMA	1					
6	4XV–8182A–00	.TUERCA	1					
7	28P–81826–00	.PERNO	2					
8	3TB–81847–00	..ANILLO GOMA	1					
9	4XV–8182A–00	TUERCA	1					
10	39P–81815–00	CABLE, MOTOR DE ARRANQUE	1					
11	4B5–81871–00	.TAPA	1					
12	91312–06040	TORNILLO	2					

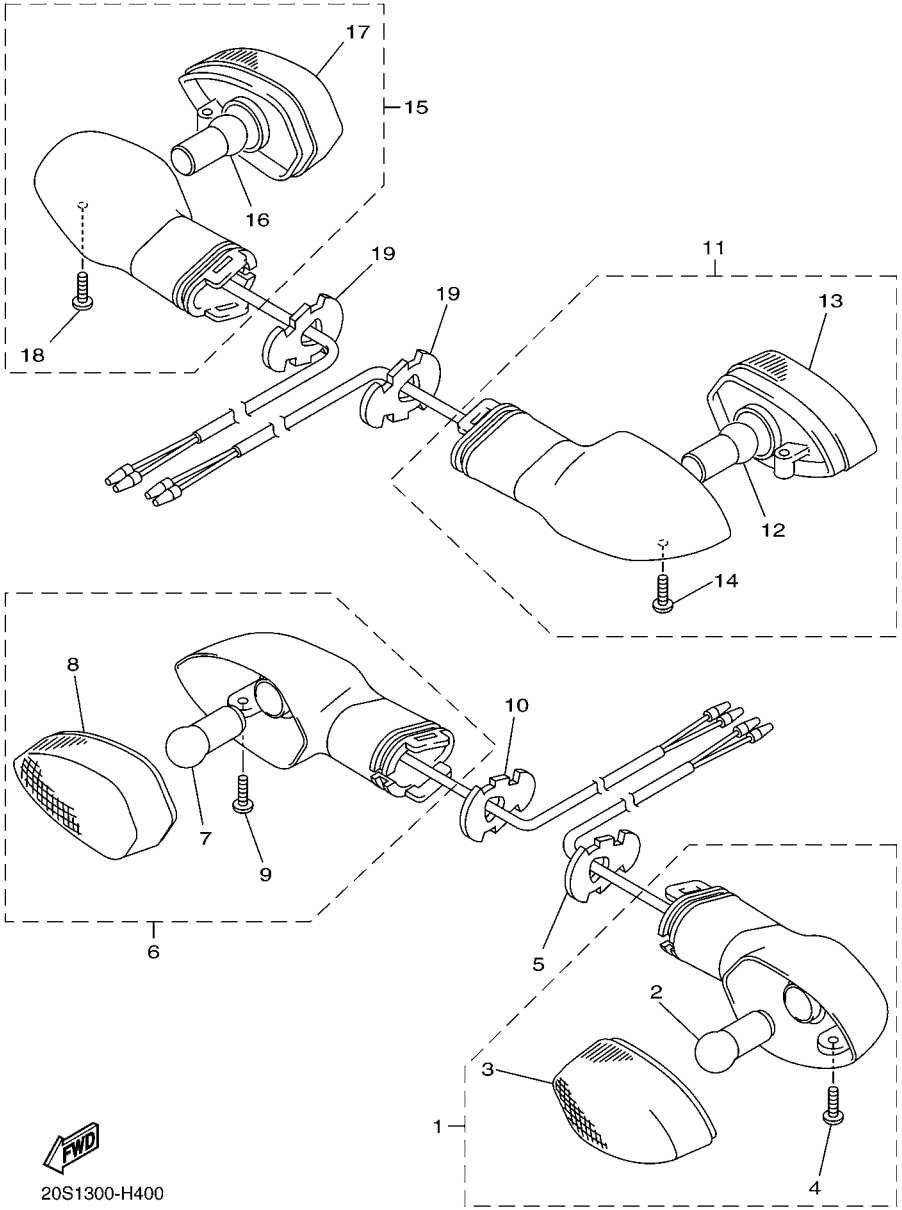

FIG. 40 LUZ DE DESTELLADOR

REF. Nº	CODIGO Nº	DESCRIPCION	39P1					OBSERVACIONES
1	3D7–83310–10	DESTELLADOR DE LUZ DELANT.	1					
2	20S–83311–00	.BOMBILLA DE DESTELLADOR(12V10W	1					
3	3D9–H333A–00	.LENTES COMPLETO 1	1					
4	3D9–H3333–10	.TORNILLO ACCESORIO DE LENTE	1					
5	3D7–83318–10	SOPORTE DE DESTELLADOR 1	1					
6	3D7–83320–10	DESTELLADOR DE LUZ DELANT.	1					
7	20S–83311–00	.BOMBILLA DE DESTELLADOR(12V10W	1					
8	3D9–H334A–00	.LENTES COMPLETO 2	1					
9	3D9–H3333–10	.TORNILLO ACCESORIO DE LENTE	1					
10	3D7–83318–10	SOPORTE DE DESTELLADOR 1	1					
11	39P–83330–00	DESTELLADOR DE LUZ TRAS.COMPL.	1					
12	20S–83311–00	.BOMBILLA DE DESTELLADOR(12V10W	1					
13	3D9–H334A–00	.LENTES COMPLETO 2	1					
14	3D9–H3333–10	.TORNILLO ACCESORIO DE LENTE	1					
15	39P–83340–00	DESTELLADOR DE LUZ TRAS.COMPL.	1					
16	20S–83311–00	.BOMBILLA DE DESTELLADOR(12V10W	1					
17	3D9–H333A–00	.LENTES COMPLETO 1	1					
18	3D9–H3333–10	.TORNILLO ACCESORIO DE LENTE	1					
19	3D7–83318–10	SOPORTE DE DESTELLADOR 1	2					

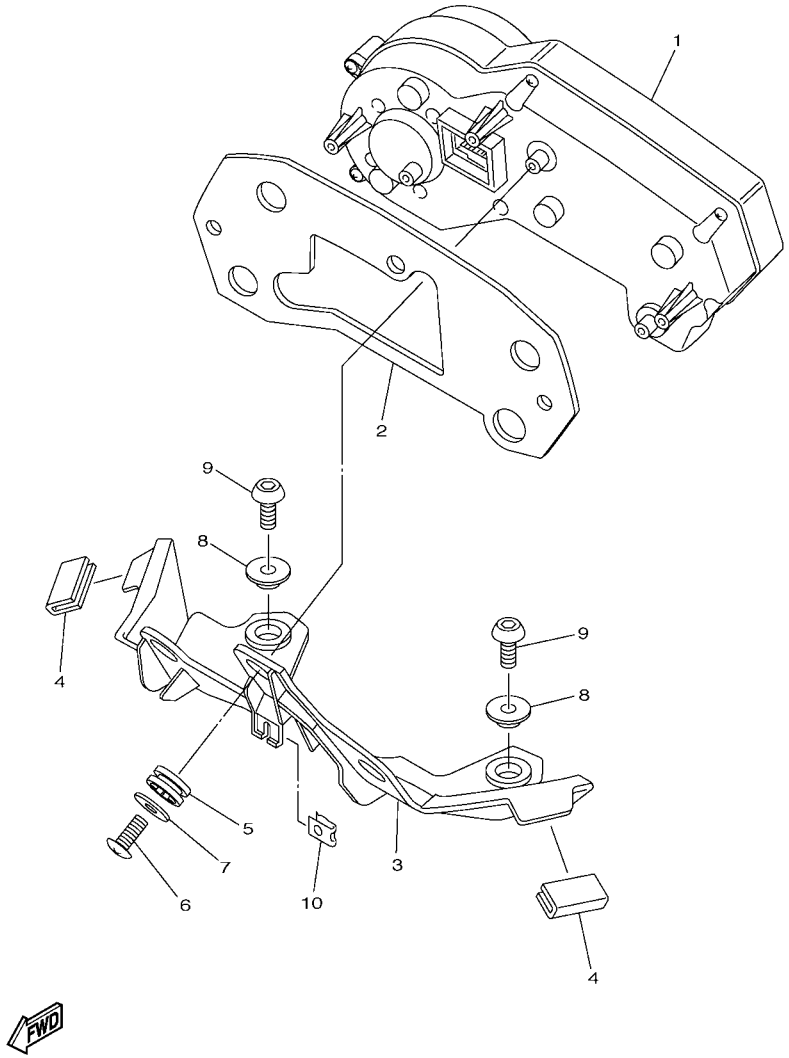

FIG. 41 MEDIDOR

REF. Nº	CODIGO Nº	DESCRIPCION	39P1					OBSERVACIONES
1	39P–83500–00	METRO COMPLETO (KM/H)	1					
2	39P–83615–00	PANTALLA, MEDIDOR	1					
3	39P–24881–00	SOPORTE, MESSER	1					
4	90520–05017	EQUILIBRIO, CUBIERTA	2					
5	4XV–83513–00	AMORTIGUADOR	3					
6	90160–05012	TORNILLO REDONDO ROSCA HEMBRA	3					
7	90201–05036	ARANDELA PLANA	3					
8	90387–06170	ESPACIADOR	2					
9	90111–06059	TORNILLO	2					
10	90183–05074	TUERCA DE RESORTE	1					

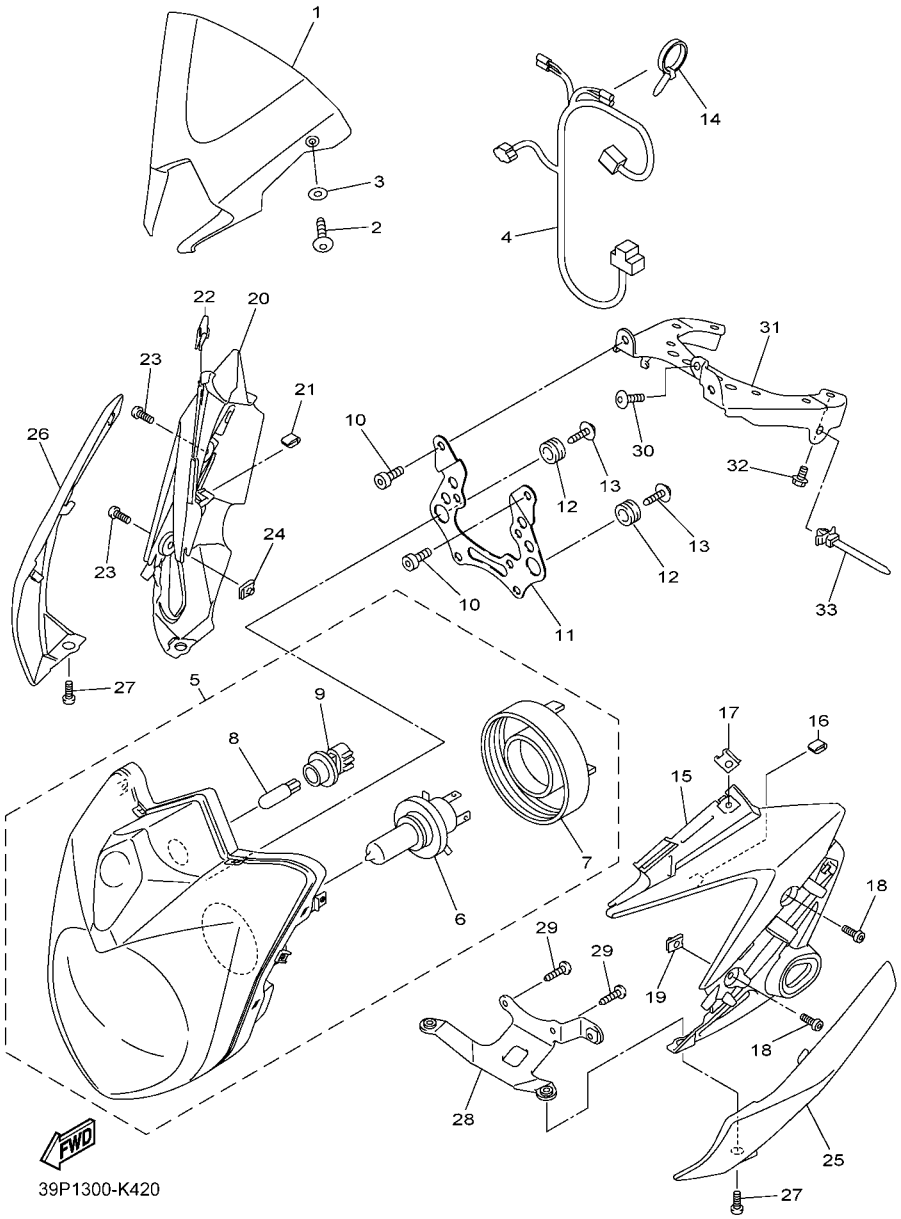

FIG. 42 FARO DELANTERO

REF. Nº	CODIGO Nº	DESCRIPCION	39P1					OBSERVACIONES
1	39P–83559–00–P0	CUBIERTA DE MEDIDOR	1					UR PARA SMX
	39P–83559–00–P1	CUBIERTA DE MEDIDOR	1					UR PARA BWC1
	39P–83559–00–P2	CUBIERTA DE MEDIDOR	1					UR PARA DPBMC
2	90167–05076	TORNILLO DE ROSCA HEMBRA	2					
3	90202–05002	ARANDELA DE PLANA	2					
4	39P–82509–00	CABLE SUBCONDUCTOR	1					
5	20S–84300–00	FARO DELANTERO COMPLETO	1					
6	4K0–84314–G0	.BOMBILLA (12V 60/55W HALOGEN)	1					
7	5JW–84397–00	.CUBIERTA DE ENCASTRE	1					
8	5DM–84347–00	.AMPOLLETA (12V-5W)	1					
9	5JW–84346–00	.ENCASTRE DE LUZ PILOTO	1					
10	91312–06010	TORNILLO	2					
11	20S–28396–00	PLACA 1	1					
12	90480–14004	TAPON	2					
13	90164–05001	TORNILLO ROSCA HEMBRA	2					
14	90465–10098	BRIDA	2					
15	39P–23121–00	CUBIERTA SUPERIOR 1	1					
16	20S–28376–00	ADORNO	1					
17	90183–05042	TUERCA DE RESORTE	1					
18	90111–06127	TORNILLO	2					
19	90183–06069	TUERCA DE RESORTE	1					
20	39P–23131–00	CUBIERTA SUPERIOR 2	1					
21	20S–28376–00	ADORNO	1					
22	90183–05042	TUERCA DE RESORTE	1					
23	90111–06127	TORNILLO	2					
24	90183–06069	TUERCA DE RESORTE	1					
25	39P–23122–00–P0	CUBIERTA EXTERIOR 1	1					UR PARA SMX

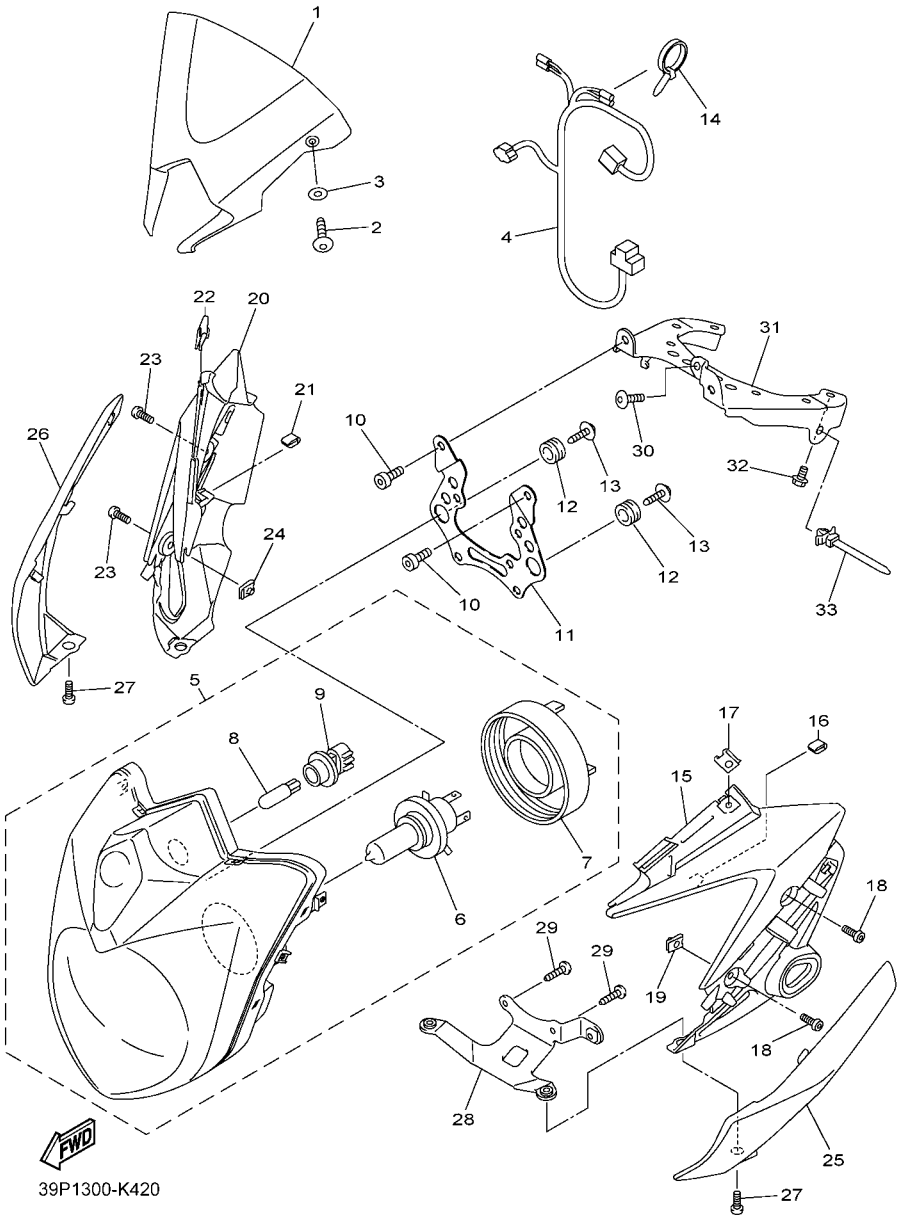

FIG. 42 FARO DELANTERO

REF. Nº	CODIGO Nº	DESCRIPCION	39P1					OBSERVACIONES
25	39P–23122–00–P1	CUBIERTA EXTERIOR 1	1					UR PARA BWC1
	39P–23122–00–P2	CUBIERTA EXTERIOR 1	1					UR PARA DPBMC
26	39P–23132–00–P0	CUBIERTA EXTERIOR 2	1					UR PARA SMX
	39P–23132–00–P1	CUBIERTA EXTERIOR 2	1					UR PARA BWC1
	39P–23132–00–P2	CUBIERTA EXTERIOR 2	1					UR PARA DPBMC
27	90111–06127	TORNILLO	2					
28	39P–8431R–00	SOPORTE	1					
29	97702–50016	TORNILLO ROSCA HEMBRA	2					
30	92012–05012	PERNO	1					
31	39P–84119–00	APOYO DE FARO DELANTERO 2	1					
32	95802–06012	TORNILLO DE REBORDE	2					
33	90464–12089	BRIDA	2					

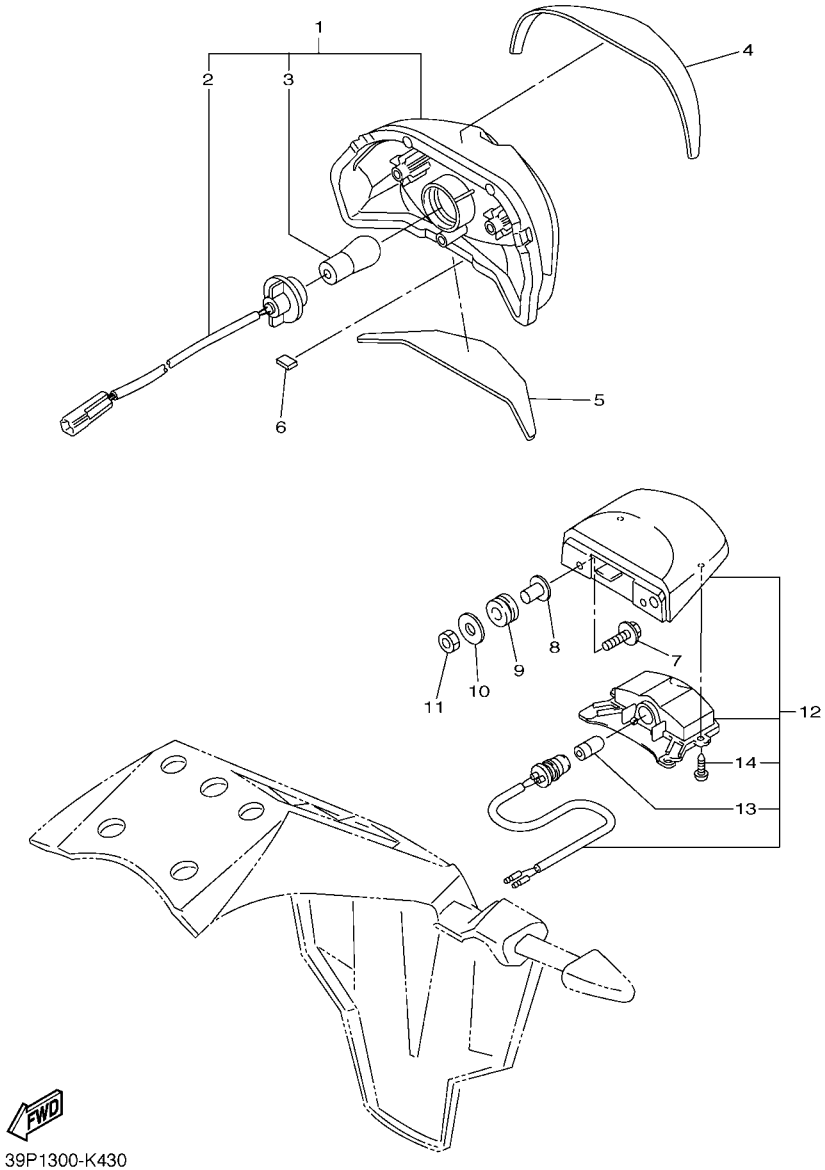

FIG. 43 LUZ DE COLA

REF. Nº	CODIGO Nº	DESCRIPCION	39P1					OBSERVACIONES
1	39P–84710–00	UNIDAD FARO TRASERO COMPL.	1					
2	39P–84735–00	.CABLE COMPLETA	1					
3	1A2–84714–41	.AMPOLLETA (12V-21/5W)	1					
4	3C3–84736–00	AMORTIGUADOR DE COLA	1					
5	2D1–84737–00	AMORTIGUADOR, TRASERO 2	1					
6	90520–01002	EQUILIBRIO, CUBIERTA	2					
7	90159–05035	TORNILLO CON VALONA	2					
8	90387–05042	ESPACIADOR	2					
9	90480–11009	TAPON	2					
10	92902–05200	ARANDELA	2					
11	95602–05100	TUERCA AUTOBLOCANTE	2					
12	2D1–84745–00	UNIDAD DE LUZ DE LICENCIA COMP	1					
13	4HC–84744–00	.BOMBILLA (12V-5W)	1					
14	97706–04012	.TORNILLO, ROSCA CHAPA	2					

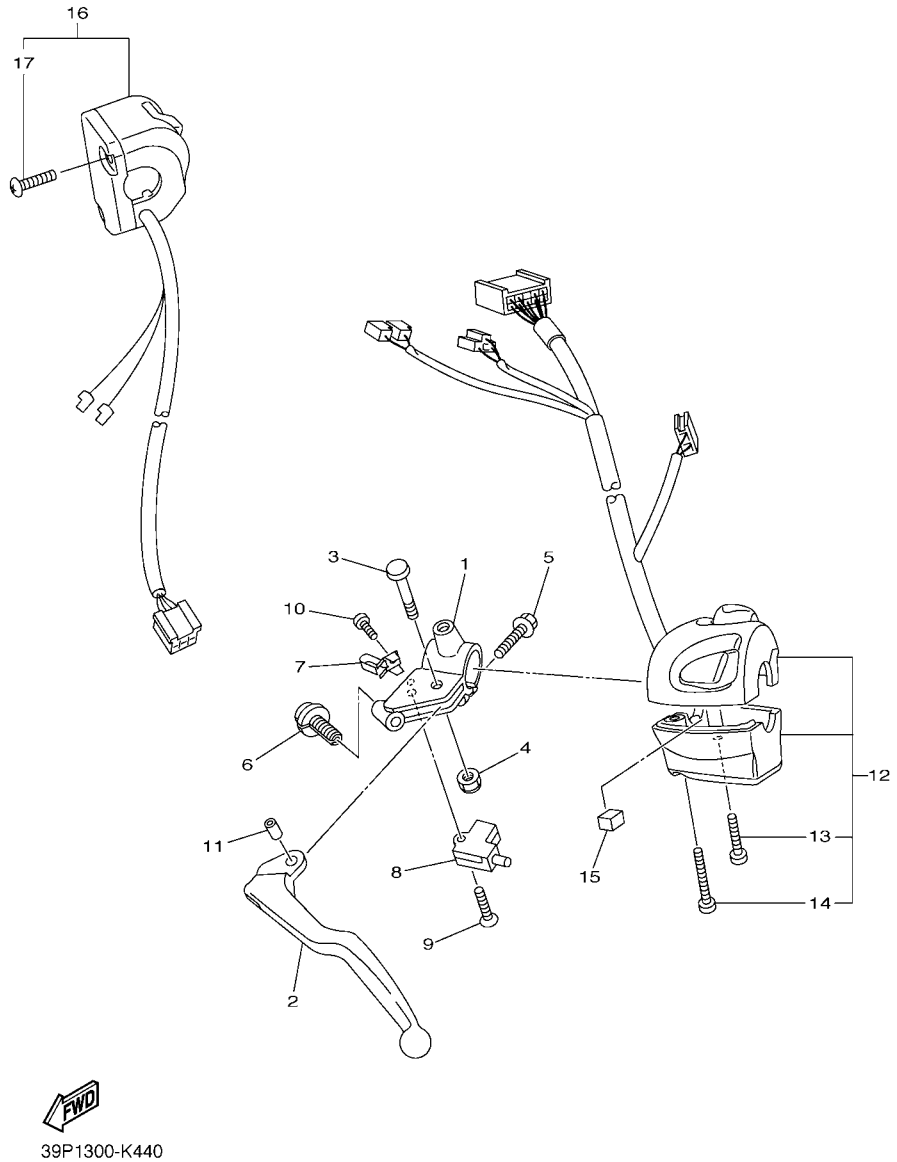

FIG. 44 INTERRUPTOR DE MANILLAR&PALANC

REF. Nº	CODIGO Nº	DESCRIPCION	39P1					OBSERVACIONES
1	1B3–82911–00	SOPORTE DE LEVA 1	1					
2	5EB–83912–03	PALANCA 1	1					
3	2C0–83945–00	PERNO DE PALANCA	1					
4	95607–06200	TUERCA DE AUTO-CIERRE	1					
5	95027–06020	PERNO, DE BRIDA	1					
6	5LV–83951–00	PERNO DE CABLE DE AJUSTE	1					
7	4XV–83929–00	PLACA DE RESORTE	1					
8	3YX–82917–01	INTERRUPTOR	1					
9	98704–03020	TORNILLO DE CABEZA PLANA	1					
10	98507–04010	TORNILLO DE CABEZA PLANA	1					
11	5JJ–83913–00	COLLAR DE PALANCA 1	1					
12	39P–83969–00	INTERRUPTOR DE MANIJA 5	1					
13	98507–05030	.TORNILLO DE CABEZA PLANA	1					
14	98507–05045	.TORNILLO DE CABEZA PLANA	1					
15	90520–10010	EQUILIBRIO, CUBIERTA	1					
16	39P–83975–00	INTERRUPTOR DE MANIJA 2	1					
17	98507–05022	.TORNILLO DE CABEZA PLANA	2					

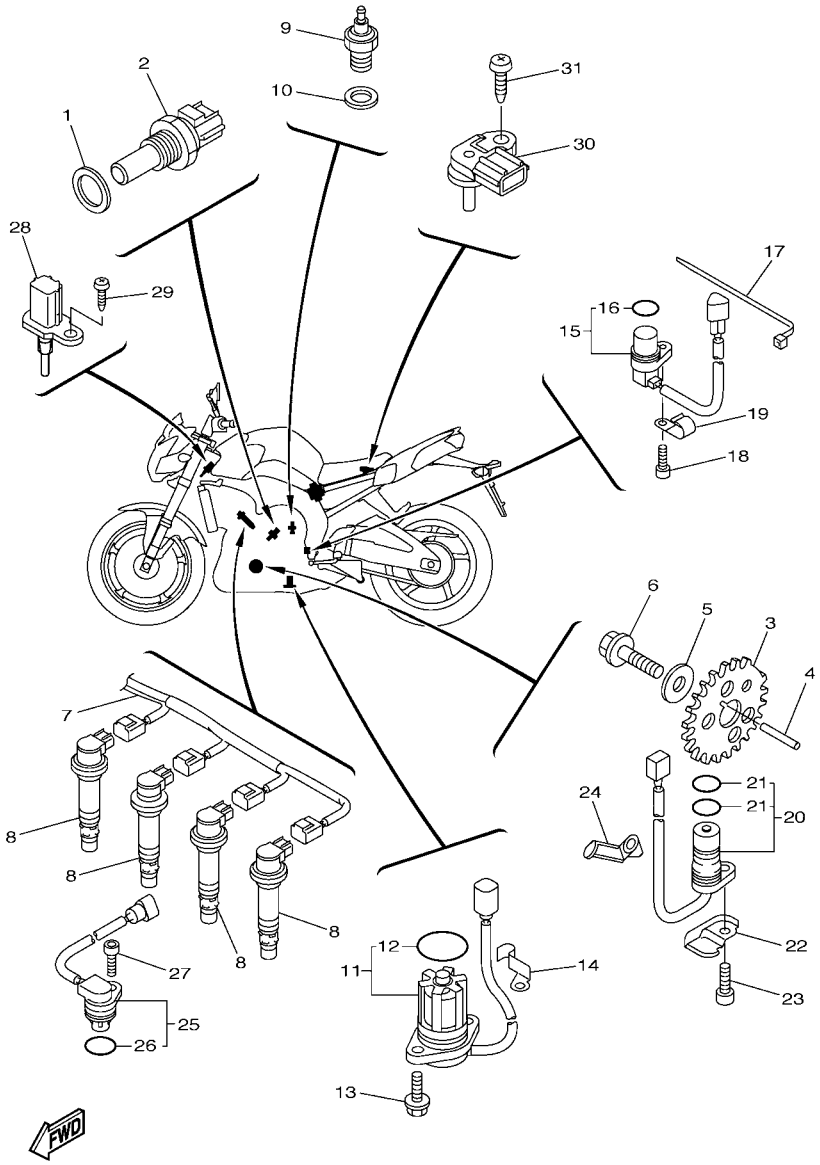

FIG. 45 EQUIPO ELECTRICO 1

REF. Nº	CODIGO Nº	DESCRIPCION	39P1					OBSERVACIONES
1	90201–12790	ARANDELA PLANA	1					
2	8CC–85790–01	TERMICA SENSORIO	1					
3	2D1–81673–00	ROTOR	1					
4	90282–03001	CHAVETA, RECTA	1					
5	90201–10039	ARANDELA PLANA	1					
6	90105–10290	TORNILLO	1					
7	39P–82309–00	CABLE SUBCONDUCTOR	1					
8	39P–82310–00	BOBINA DE ENCENDIDO COMPLETA	4					
9	3GB–82540–01	INTERRUPTOR NEUTRAL COMPL	1					
10	90430–10148	JUNTA	1					
11	5VY–85720–00	MEDIDOR DE NIVEL DE ACEITE	1					
12	5VY–8A8E0–00	.ANILLO O	1					
13	95022–06016	PERNO, DE BRIDA	2					
14	90465–08053	BRIDA	1					
15	4XV–83755–03	SENSOR DE VELOCIDAD	1					
16	4D9–81168–00	.ANILLO O	1					
17	90464–51001	BRIDA	1					
18	90110–06161	TORNILLO ALLEN	1					
19	90462–08057	BRIDA	1					
20	23P–81670–00	RECOGEDOR COMPL.	1					
21	5VY–8A8E1–00	.ANILLO-O	2					
22	23P–15589–00	PLACA	1					
23	90110–06161	TORNILLO ALLEN	1					
24	90465–08054	BRIDA	1					
25	5VY–85896–00	SENSOR DE LEVA	1					
26	4D9–81168–00	.ANILLO O	1					
27	90110–06175	TORNILLO ALLEN	1					

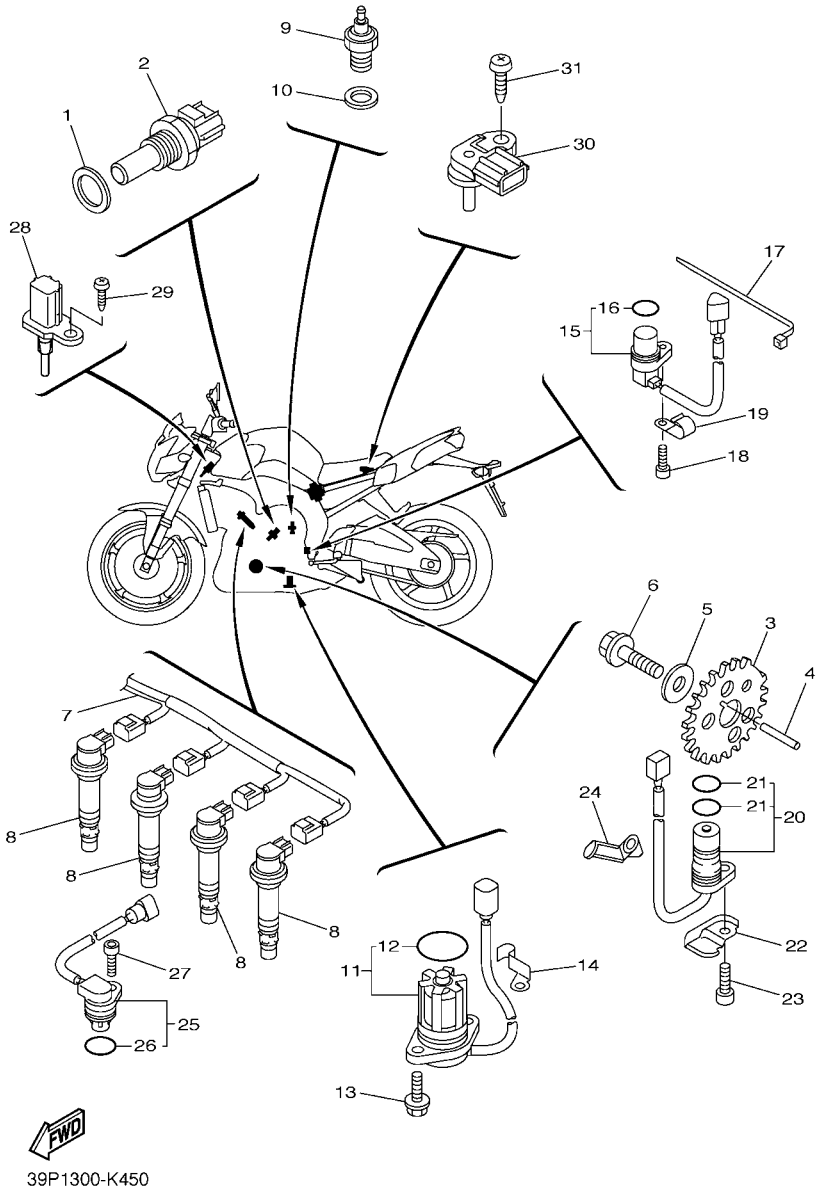

FIG. 45 EQUIPO ELECTRICO 1

REF. Nº	CODIGO Nº	DESCRIPCION	39P1					OBSERVACIONES
28	5YU–85886–00	SENSOR	1					
29	97702–50520	TORNILLO ROSCA HEMBRA	1					
30	5S7–82380–00	SENSOR DE PRESION	1					
31	97702–60520	TORNILLO ROSCA HEMBRA	1					

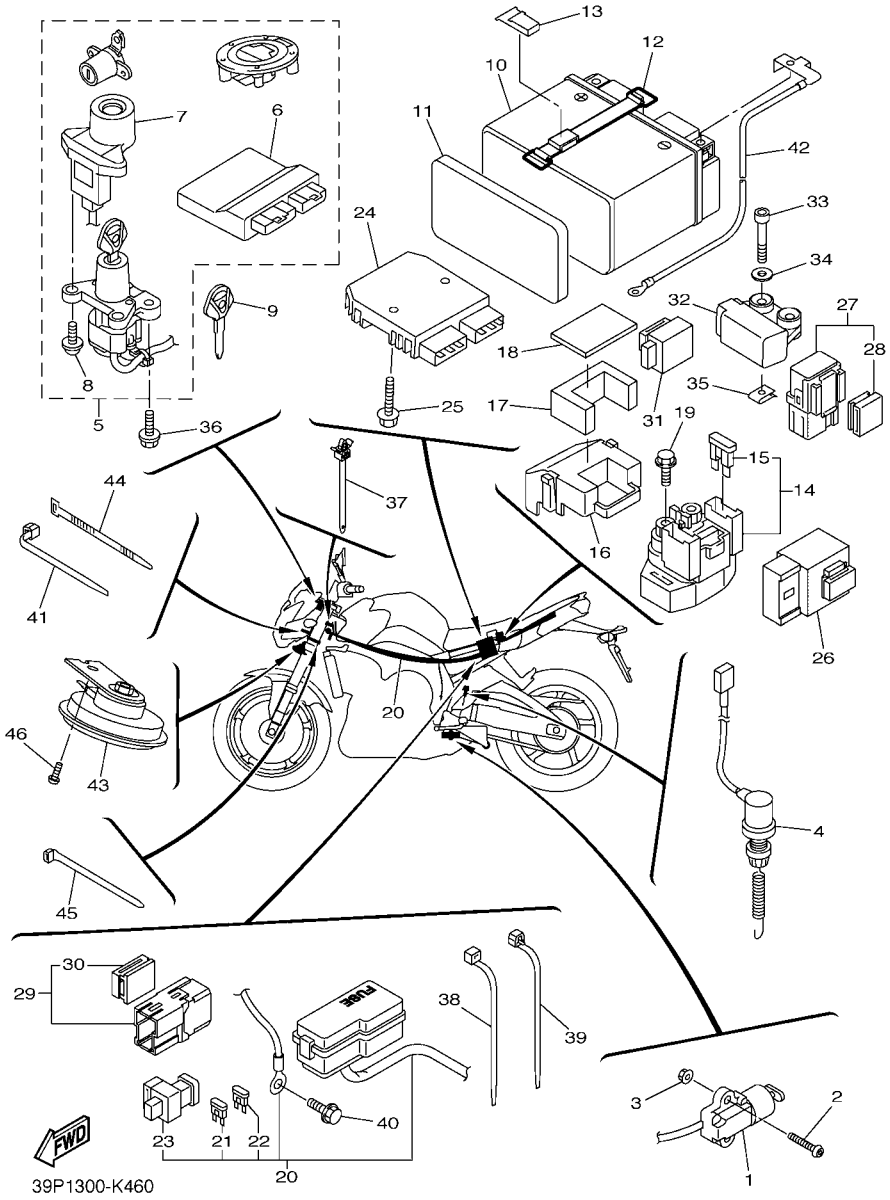

FIG. 46 EQUIPO ELECTRICO 2

REF. Nº	CODIGO Nº	DESCRIPCION	39P1					OBSERVACIONES
1	23P–82566–60	INTERRUPTOR	1					
2	92012–05030	PERNO	2					
3	95602–05200	TUERCA DE AUTO-CIERRE	2					
4	39P–82530–00	INTERRUPTOR DE PARADA COMPLETO	1					
5	39P–W8250–00	JUEGO DE INMOVILIZADOR	1					
6	39P–8591A–00	.UNIDAD CONTROL	1					
7	39P–8255P–00	.UNIDAD INMOVILIZADORA	1					
8	5SL–82113–01	.TORNILLO	2					
9	5SL–82511–08	BLANK KEY	1					AP
10	5VY–82100–00	BATERIA COMPLETA(YUASA YTZ10S)	1					
11	39P–8246K–00	SEPARADOR	1					
12	2D1–82131–00	TIRANTE DE BATERIA	1					
13	5YU–2162A–00	GANCHO	1					
14	2C0–81940–00	CONJUNTO ARRANCADOR RELEVO	1					
15	36Y–82151–00	.FUSIBLE (15A-BL)	2					
16	5SL–82119–10	CUBIERTA DE CABLE CONDUCTOR	1					
17	39P–82176–00	AMORTIGUADOR	1					
18	39P–82157–00	AMORTIGUADOR	1					
19	95022–06008	PERNO, DE BRIDA	2					
20	39P–82590–00	CONJUNTO DE CABLES	1					
21	5JJ–82151–10	.FUSIBLE (15A-BL)	3					
22	5JJ–82151–30	.FUSIBLE (10A-BL)	6					
23	5JW–82151–10	.FUSIBLE (50A)	1					
24	1D7–81960–00	RECTIFICADOR Y REGULADOR	1					
25	95822–06025	TORNILLO DE REBORDE	2					
26	5VK–81950–40	RELE COMPLETO	1					
27	5JJ–81950–20	RELE COMPLETO	1					

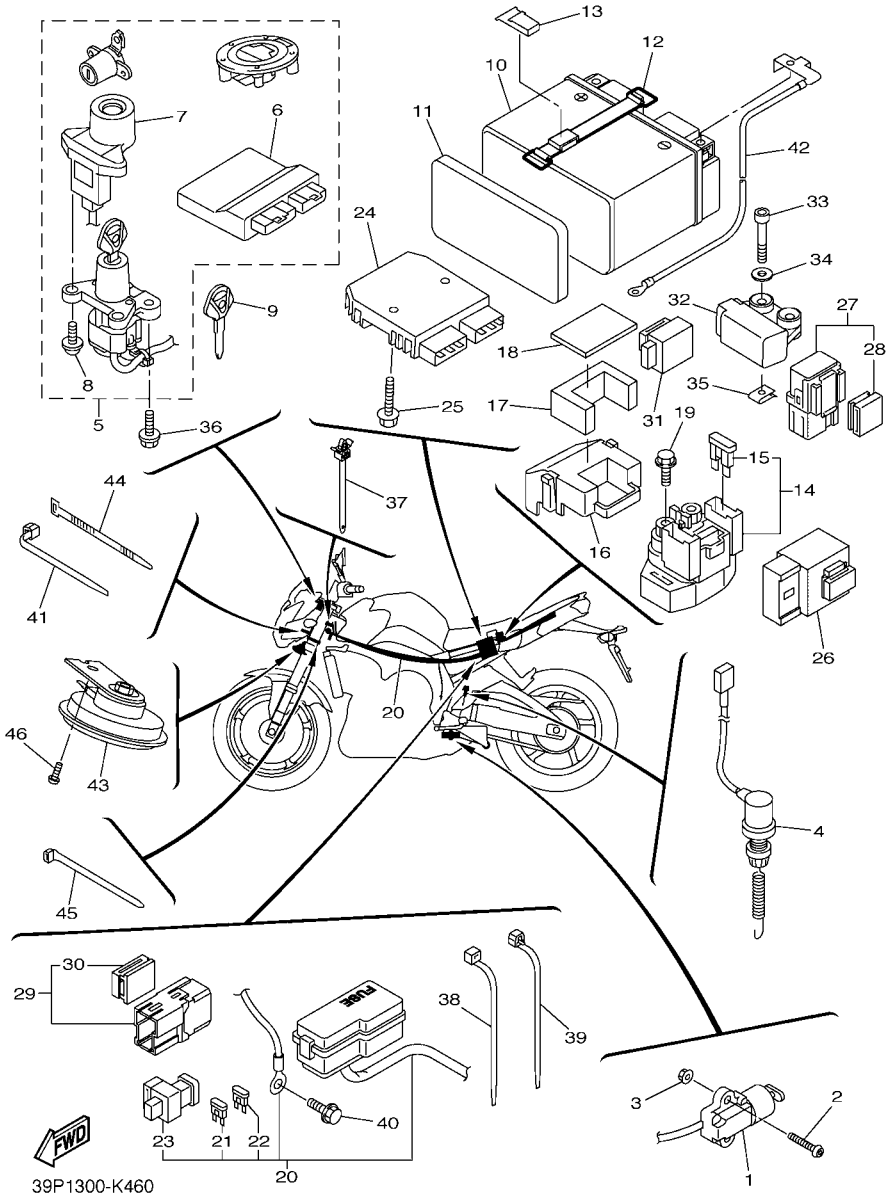

FIG. 46 EQUIPO ELECTRICO 2

REF. Nº	CODIGO Nº	DESCRIPCION	39P1					OBSERVACIONES
28	5JJ–81952–00	.SOSTEN DE RELE	1					
29	5JJ–81950–20	RELE COMPLETO	1					
30	5JJ–81952–00	.SOSTEN DE RELE	1					
31	4GY–83350–00	RELE DE DESTELLADOR COMPL.	1					
32	5PS–82576–01	SENSOR ANGULO DE INCLINATION	1					
33	91312–04025	TORNILLO	2					
34	90201–04030	ARANDELA PLANA	2					
35	90183–04039	TUERCA DE RESORTE	2					
36	90109–08195	PERNO	2					
37	90464–12036	BRIDA	1					
38	90464–13073	BRIDA	3					
39	90464–15195	BRIDA	2					
40	91380–06010	PERNO	1					
41	90464–13077	BRIDA	1					
42	2D1–82116–00	CABLE CONDUCTOR NEGATIVO	1					
43	39P–83371–00	BOCINA	1					
44	90465–10098	BRIDA	1					
45	90464–59001	BRIDA	1					
46	92012–06014	PERNO	1					

CODIGO Nº	REF. Nº
2D1–11026–00	1 – 28
39P–11101–09	1 – 1
5VY–1111G–00	1 – 26
20S–11134–10	1 – 2
5VY–11165–00	15 – 30
39P–11181–00	1 – 17
4C8–11191–00	1 – 18
4C8–11193–00	1 – 20
214–11198–01	9 – 7
39P–11311–00	2 – 1
5VY–11351–00	2 – 2
4C8–11411–00	3 – 1
5VY–11416–00	3 – 6
5VY–11416–10	3 – 6
5VY–11416–20	3 – 6
5VY–11416–30	3 – 6
5VY–11416–A0	3 – 6
5VY–11445–00	16 – 8
5VY–11478–00	16 – 4
2D1–11537–10	16 – 1
39P–11549–00	3 – 5
39P–11603–00	3 – 8
39P–11631–00	3 – 7
39P–11633–00	3 – 10
14B–11650–00	3 – 2
5VY–11654–01	3 – 3
2D1–11656–00	3 – 4
2D1–11656–10	3 – 4
2D1–11656–20	3 – 4
2D1–11656–30	3 – 4
39P–12111–00	4 – 1
39P–12113–00	4 – 4
1HX–12118–00	4 – 6
39P–12119–00	4 – 7
39P–12121–00	4 – 2
5EB–12126–00	4 – 3
5EB–12127–00	4 – 5
5EB–12153–09	4 – 9
5EB–12153–10	4 – 9
1HX–12168–00	4 – 8
1HX–12168–20	4 – 8
1HX–12168–40	4 – 8
1HX–12168–60	4 – 8
1HX–12168–80	4 – 8
1HX–12168–A0	4 – 8
1HX–12168–F0	4 – 8
1HX–12168–H1	4 – 8
1HX–12168–K1	4 – 8

CODIGO Nº	REF. Nº
1HX–12168–M1	4 – 8
1HX–12168–R1	4 – 8
1HX–12168–U1	4 – 8
1HX–12168–W1	4 – 8
1HX–12168–Y1	4 – 8
1HX–12169–11	4 – 8
1HX–12169–31	4 – 8
1HX–12169–50	4 – 8
1HX–12169–70	4 – 8
1HX–12169–90	4 – 8
1HX–12169–E0	4 – 8
1HX–12169–G0	4 – 8
1HX–12169–J0	4 – 8
1HX–12169–L0	4 – 8
1HX–12169–N0	4 – 8
1HX–12169–T0	4 – 8
39P–12170–00	5 – 1
20S–12176–00	5 – 3
39P–12180–00	5 – 2
39P–12210–00	5 – 6
2D1–12213–00	5 – 7
5BE–12241–00	1 – 19
4C8–12251–00	5 – 9
4C8–12252–00	5 – 10
2D1–12405–01	7 – 24
39P–12405–10	7 – 25
39P–1240J–00	7 – 44
2D1–12410–00	7 – 3
5LP–12411–00	7 – 4
4C8–12420–00	6 – 6
5VY–12422–00	6 – 13
5FC–12437–00	7 – 30
4C8–12438–00	6 – 9
4XV–12439–00	6 – 11
5VY–1243A–00	7 – 17
39P–1243E–00	7 – 21
39P–1243F–00	7 – 11
5VY–12443–10	15 – 47
2D1–1244G–00	7 – 18
5VY–12450–11	6 – 10
5VY–12456–10	6 – 22
2D1–12461–00	7 – 28
4FL–12462–00	7 – 29
39P–12464–00	7 – 36
14B–12469–10	6 – 1
39P–1246A–00	7 – 46
5GV–1246A–00	7 – 14
39P–1246E–00	7 – 47

CODIGO Nº	REF. Nº
39P–12481–00	6 – 28
2D1–12484–01	6 – 35
4XV–12485–00	6 – 26
5VY–12485–10	7 – 7
1AA–12535–00	7 – 26
2D1–12551–00	7 – 39
39P–12576–00	6 – 2
39P–12578–00	7 – 13
5VY–12579–00	7 – 8
5VY–12588–00	6 – 31
39P–12589–00	7 – 41
39P–12637–00	7 – 1
2D1–12675–00	7 – 27
5FL–12822–00	9 – 15
5VY–13117–10	8 – 5
5VY–13161–00	9 – 12
5VY–1316E–00	8 – 10
5VY–13310–10	6 – 16
5VY–13336–00	6 – 18
5VY–13354–00	17 – 32
5VY–13355–00	6 – 20
39P–13400–00	9 – 5
5VY–13410–00	8 – 2
4C8–13414–00	9 – 9
5VY–13416–00	8 – 7
39P–13418–00	14 – 5
5GH–13440–20	9 – 2
39P–13470–00	9 – 14
5JW–13473–00	9 – 17
5EB–13475–00	9 – 16
5VY–13490–00	9 – 3
69J–13532–00	11 – 11
8FP–13556–00	11 – 4
14B–13573–00	11 – 15
39P–13595–00	10 – 2
39P–13596–00	10 – 4
39P–13750–00	11 – 1
39P–13761–00	11 – 2
39P–13795–00	11 – 34
5VY–13898–00	8 – 13
39P–13907–00	28 – 13
39P–1393A–00	11 – 10
39P–13971–00	28 – 39
5JW–14104–00	11 – 22
39P–14137–00	11 – 16
39P–14147–00	11 – 35
5PS–14147–00	11 – 3
39P–14148–00	10 – 16

CODIGO Nº	REF. Nº
39P–14149–00	10 – 18
5VX–14149–00	11 – 17
363–14198–00	11 – 14
2C0–14216–00	11 – 7
5FL–14216–00	11 – 20
8CC–14216–10	11 – 12
3XV–14251–00	11 – 24
5PW–14251–00	11 – 5
5FL–14348–10	11 – 28
5JW–14349–00	11 – 21
5JW–14349–10	11 – 25
8FP–14349–20	11 – 26
39P–14396–00	11 – 32
2D1–14409–00	10 – 20
39P–1440B–00	10 – 24
39P–1440C–00	10 – 26
39P–14411–00	10 – 6
39P–14413–00	15 – 50
39P–14421–00	10 – 7
39P–14425–00	10 – 22
39P–14426–00	10 – 23
2D1–14451–00	10 – 8
2D1–14452–00	10 – 9
39P–14457–00	10 – 11
2D1–14462–00	10 – 10
2D1–14498–00	10 – 12
39P–14503–00	11 – 23
5YP–14561–00	11 – 6
5VX–14565–00	11 – 18
39P–14592–00	11 – 37
39P–14610–00	13 – 1
4FM–14613–00	13 – 3
39P–14710–00	13 – 6
5YU–14714–10	13 – 7
39P–14715–00	13 – 8
39P–14718–00	13 – 10
5JW–14723–00	12 – 7
5BE–14747–00	36 – 57
39P–14807–00	11 – 29
5VY–1482K–00	1 – 21
2D1–14840–00	12 – 1
5VY–14881–00	12 – 2
5VY–14882–00	12 – 3
39P–14883–00	12 – 5
5SL–14890–10	1 – 22
5VY–14899–00	1 – 23
3UH–14937–00	11 – 33
31H–14987–00	11 – 31

CODIGO Nº	REF. Nº
39P–14987–00	11 – 30
4C8–15100–00	14 – 1
39P–15113–00	15 – 33
5EB–15155–00	14 – 2
5VY–15163–00	18 – 10
5VY–15164–00	15 – 4
36Y–15189–00	15 – 42
4H7–15189–00	15 – 44
5PX–15189–00	15 – 8
4C8–15191–00	38 – 4
5VY–15316–00	14 – 20
5PW–15361–00	14 – 19
3F9–15362–10	15 – 17
1D7–15379–00	28 – 29
39P–15393–00	10 – 14
5VY–15411–00	15 – 1
2D1–15413–00	15 – 36
2D1–15416–00	15 – 23
2D1–15418–00	15 – 14
2D1–15421–00	15 – 16
4C8–15431–00	15 – 39
39P–15441–00	15 – 32
2D1–15451–10	15 – 10
4C8–15456–00	15 – 28
4C8–15461–00	15 – 19
4C8–15462–00	15 – 37
5VY–15515–00	16 – 7
5VY–15517–00	16 – 12
5VY–15521–00	16 – 13
5VY–15542–00	15 – 5
5VY–15570–00	16 – 5
5VY–15586–00	16 – 6
23P–15589–00	45 – 22
5VY–16150–00	17 – 7
5VY–16154–00	17 – 8
5VY–16155–00	16 – 2
5VY–16164–00	17 – 30
5VY–16181–00	17 – 31
5VY–16321–00	17 – 15
5VY–16325–00	17 – 13
	17 – 16
5VY–16330–00	17 – 17
5VY–16331–00	17 – 12
5VY–16340–00	17 – 26
132–16346–00	20 – 2
5VY–16351–00	17 – 18
4XV–16356–01	17 – 25
39P–16370–00	17 – 9

CODIGO Nº	REF. Nº
2D1–16382–00	17 – 1
5VY–16383–00	17 – 11
5VY–16384–00	17 – 10
4X7–16385–00	17 – 14
39P–17121–00	18 – 9
39P–17131–00	18 – 6
39P–17151–00	18 – 3
39P–17161–00	18 – 8
39P–17211–00	18 – 32
39P–17221–00	18 – 21
5VY–17231–00	18 – 29
39P–17241–00	18 – 26
39P–17251–00	18 – 30
39P–17261–00	18 – 24
4C8–17402–00	18 – 17
39P–17411–00	18 – 1
5VY–17442–00	18 – 19
5VY–17446–00	18 – 15
5PS–17460–00	18 – 35
2D1–18101–00	20 – 10
39P–18110–00	20 – 15
2D1–18112–00	20 – 13
5EB–18113–00	20 – 16
	37 – 2
39P–18115–00	20 – 17
5VX–18116–00	20 – 20
5VY–18127–10	20 – 5
5VY–18140–00	20 – 3
5VY–18144–00	20 – 1
5VX–18154–00	20 – 21
2D1–18511–00	19 – 4
39P–18512–00	19 – 5
5VY–18513–01	19 – 6
5VY–18531–00	19 – 7
5VY–18535–00	19 – 8
5VY–18536–00	19 – 10
5VY–18540–00	19 – 1
136–18542–00	19 – 2
5VY–18562–00	19 – 11
2D1–21110–01–P0	21 – 1
39P–2117E–00	22 – 21
2D1–2117G–00	21 – 20
4XV–2117K–00	29 – 23
39P–2117N–00	21 – 14
39P–21190–00	21 – 3
39P–21287–00	21 – 26
39P–21349–00	29 – 7
4XV–21376–00	22 – 13

CODIGO Nº	REF. Nº
2D1–21399–00	21 – 16
39P–21436–00	36 – 56
39P–2144G–00	36 – 34
4C8–21495–00	21 – 10
	21 – 13
5PW–21511–00–P6	22 – 1
1CA–21568–00	28 – 41
39P–21575–00	21 – 35
39P–21611–00	22 – 30
2D1–21629–00	22 – 32
5YU–2162A–00	46 – 13
5YU–21639–00	21 – 28
39P–2163A–00	22 – 19
2D1–21646–00	22 – 14
2D1–21650–00	24 – 32
39P–21651–00–P0	22 – 15
39P–21651–00–P1	22 – 15
39P–21651–00–P2	22 – 15
14B–21668–00	24 – 41
2D1–21688–02	22 – 33
2D1–216A2–00	22 – 10
2D1–216A3–00	22 – 11
39P–21711–00	23 – 1
2D1–21719–00	23 – 7
39P–2171A–00–P0	28 – 23
39P–2171A–00–P1	28 – 23
39P–2171A–00–P2	28 – 23
39P–21721–00	23 – 3
39P–2174X–00	23 – 2
	23 – 4
5PW–2174X–00	22 – 16
2D1–2174Y–00	21 – 17
26H–21828–00	23 – 10
2D1–21871–00	23 – 8
5VY–21875–00	23 – 9
2D1–2197E–00	21 – 2
39P–22110–00	24 – 1
2D1–22117–00	24 – 18
5JJ–22128–00	24 – 8
39P–22141–00	24 – 29
2D1–22151–00	24 – 12
2D1–2217A–10	24 – 19
2D1–2217M–00	24 – 20
39P–22184–00	24 – 5
39P–22210–00	25 – 1
5SL–22311–00	24 – 36
39P–23102–00	27 – 1
39P–23103–00	27 – 16

CODIGO Nº	REF. Nº
39P–23110–00	27 – 7
39P–23111–00	27 – 14
	27 – 29
5VY–23118–00	27 – 12
	27 – 27
39P–23120–00	27 – 22
39P–23121–00	42 – 15
39P–23122–00–P0	42 – 25
39P–23122–00–P1	42 – 25
39P–23122–00–P2	42 – 25
4KM–23123–01	27 – 34
39P–23131–00	42 – 20
39P–23132–00–P0	42 – 26
39P–23132–00–P1	42 – 26
39P–23132–00–P2	42 – 26
2D1–23136–10	27 – 2
	27 – 17
39P–23141–00	27 – 11
	27 – 26
4PU–23144–00	27 – 6
	27 – 21
4PU–23145–01	27 – 4
	27 – 19
4V4–23146–L0	27 – 3
	27 – 18
39P–23147–00	27 – 15
	27 – 30
4V4–23153–L0	27 – 5
	27 – 20
509–23158–L0	27 – 9
	27 – 24
39P–23170–00	27 – 8
39P–23170–10	27 – 23
278–23181–50	27 – 10
	27 – 25
39P–23340–00	27 – 32
3LC–23357–00	27 – 13
	27 – 28
39P–23405–00	26 – 10
4XV–23415–01	26 – 4
4XV–23418–00	26 – 7
3VD–23434–00	26 – 12
4JH–23434–00	34 – 2
4H7–23441–01–P6	26 – 13
3Y6–23442–00–P2	26 – 16
39P–23445–00	26 – 20
3FV–23462–00	26 – 2
39P–24106–00	28 – 32

CODIGO Nº	REF. Nº
39P–24108–00	28 – 35
2D1–24129–00	21 – 32
2D1–2412G–00	28 – 4
2D1–24139–00	21 – 33
5SL–2413B–00	28 – 42
39P–2413Y–00	21 – 24
2D1–2414P–00	28 – 38
39P–24161–00	28 – 2
39P–24161–10	28 – 2
39P–24161–20	28 – 2
14B–24181–00	28 – 26
5VY–24181–00	28 – 3
5SL–24183–00	28 – 7
2D1–24184–00	21 – 22
2D1–24185–00	21 – 23
2D1–24192–00	28 – 15
39P–241A3–00	28 – 33
39P–241A4–00	28 – 36
39P–241A5–00	28 – 34
39P–241A6–00	28 – 37
39P–241B1–00	28 – 24
39P–24317–00	28 – 21
68V–24376–00	11 – 27
5JW–24486–00	28 – 19
39P–24491–00	28 – 14
5JJ–24602–00	28 – 10
39P–2470F–00	29 – 2
39P–24710–00	29 – 1
4NK–24728–00	29 – 13
22W–24741–00	29 – 14
39P–24741–00	29 – 15
39P–24750–00	29 – 11
39P–24768–00	29 – 17
4BP–24780–00	29 – 18
39P–24785–00	22 – 41
2D1–2478E–00	29 – 21
4BP–24792–00	29 – 19
39P–24881–00	41 – 3
20S–25117–00	30 – 2
39P–25168–00–8L	30 – 1
39P–25168–00–98	30 – 1
39P–25181–00	30 – 10
20S–25183–00	30 – 9
146–25315–00	30 – 3
39P–25317–00	32 – 5
39P–25338–00–8L	32 – 1
39P–25338–00–98	32 – 1
5EA–25364–00	32 – 6

CODIGO Nº	REF. Nº
20S–25366–00	32 – 10
4FM–25377–00	32 – 12
2D1–25381–00	32 – 22
5VY–25388–00	32 – 20
5VY–25389–01	32 – 21
5MT–25398–00	30 – 8
	32 – 9
5MT–25398–10	30 – 8
	32 – 9
5MT–25398–20	30 – 8
	32 – 9
39P–25446–00	32 – 14
39P–2580T–00	31 – 3
39P–2580U–00	31 – 14
39P–2580W–00	33 – 3
39P–2581T–00	31 – 1
1J3–25824–00	31 – 12
	31 – 23
306–25825–01	31 – 13
	31 – 24
5SL–25827–00	33 – 17
5SL–25827–10	33 – 18
5SL–25828–01	33 – 19
2D1–2582A–00	37 – 7
39P–2582W–00	33 – 1
5SL–25838–00	33 – 7
5D0–2583H–00	37 – 17
2D1–2583V–00	37 – 5
5SL–25852–00	37 – 14
5VS–25852–00	35 – 3
20S–25854–00	35 – 5
5SL–25854–00	37 – 12
5SL–25855–00	37 – 13
5VS–25855–00	35 – 4
4BP–2585F–01	37 – 8
5VS–25867–00	35 – 11
39P–25872–00	35 – 16
39P–25874–00	37 – 21
2D1–25875–00	35 – 20
2D1–25876–00	35 – 21
2D1–25886–00	24 – 42
2D1–25894–00	37 – 11
39P–25895–00	37 – 15
5VS–2589F–00	35 – 7
5VS–2589H–00	35 – 6
5SL–25914–00	33 – 9
5DH–25916–00	33 – 14
3JD–25917–00	33 – 11

CODIGO Nº	REF. Nº
5SL–25917–00	33 – 6
13S–25919–00	31 – 9
	31 – 20
5SL–25919–00	33 – 8
39P–25921–50	33 – 10
4SV–25924–00	31 – 10
	31 – 21
8CR–25924–00	33 – 13
3GM–25925–00	31 – 11
	31 – 22
5SL–25926–00	33 – 15
39P–26111–00	34 – 1
5PS–26133–20	34 – 16
	34 – 18
4YR–26240–02	34 – 4
4YR–26241–02	34 – 3
39P–26246–00	34 – 5
39P–2627E–00	34 – 9
20S–26280–00	34 – 15
4KG–26281–00	34 – 10
3XW–26282–01	34 – 11
20S–26290–00	34 – 17
39P–26302–00	34 – 7
5VS–26332–00	35 – 10
2D1–26335–00	34 – 13
278–27114–00	29 – 3
5VX–27114–00	36 – 17
	36 – 31
39P–27211–00	37 – 1
4BP–27222–02	37 – 9
39P–27267–00	21 – 38
39P–27311–00	36 – 1
2D1–27321–00	36 – 2
39P–27410–00	36 – 11
4BP–27413–00	36 – 12
	36 – 26
1HX–27415–00	36 – 19
	36 – 37
2D1–2741L–10	36 – 43
39P–27420–00	36 – 25
1NL–27424–00	36 – 16
	36 – 30
39P–27424–00	36 – 61
39P–27425–00	21 – 36
39P–2742L–00	36 – 50
3VR–27431–01	36 – 42
5VX–27437–00	36 – 46
	36 – 53

CODIGO Nº	REF. Nº
3VR–27441–01	36 – 49
39P–27442–00	36 – 15
39P–27443–00	36 – 29
39P–27486–00	36 – 18
39P–27487–00	36 – 36
39P–28100–00	22 – 43
39P–28199–S0	22 – 44
39P–28307–00	28 – 28
4XV–2834E–00	28 – 25
4KN–2836B–10	22 – 42
20S–28376–00	42 – 16
	42 – 21
20S–28396–00	42 – 11
682–44532–00	29 – 8
4D9–81168–00	45 – 16
	45 – 26
2D1–81410–10	38 – 2
5VY–81450–00	38 – 1
23P–81670–00	45 – 20
2D1–81673–00	45 – 3
39P–81800–00	39 – 1
39P–81815–00	39 – 10
28P–81826–00	39 – 7
4XV–8182A–00	39 – 6
	39 – 9
4B5–81840–00	39 – 4
11H–81844–00	39 – 2
1FK–81847–00	39 – 3
3TB–81847–00	39 – 5
	39 – 8
4B5–81871–00	39 – 11
2C0–81940–00	46 – 14
5JJ–81950–20	46 – 27
	46 – 29
5VK–81950–40	46 – 26
5JJ–81952–00	46 – 28
	46 – 30
1D7–81960–00	46 – 24
5VY–82100–00	46 – 10
5SL–82113–01	46 – 8
2D1–82116–00	46 – 42
5SL–82119–10	46 – 16
2D1–8212B–02	22 – 7
18G–82131–00	29 – 16
2D1–82131–00	46 – 12
36Y–82151–00	46 – 15
5JJ–82151–10	46 – 21
5JW–82151–10	46 – 23

CODIGO Nº	REF. Nº
5JJ–82151–30	46 – 22
39P–82157–00	46 – 18
39P–82176–00	46 – 17
39P–82309–00	45 – 7
39P–82310–00	45 – 8
5S7–82380–00	11 – 8
	45 – 30
39P–82386–00	11 – 9
39P–8246K–00	46 – 11
39P–82509–00	42 – 4
5SL–82511–08	46 – 9
39P–82530–00	46 – 4
3GB–82540–01	45 – 9
39P–8255P–00	46 – 7
23P–82566–60	46 – 1
5PS–82576–01	46 – 32
39P–82590–00	46 – 20
1UA–82591–00	21 – 21
1B3–82911–00	44 – 1
3YX–82917–01	44 – 8
3D7–83310–10	40 – 1
20S–83311–00	40 – 2
	40 – 7
	40 – 12
	40 – 16
3D7–83318–10	40 – 5
	40 – 10
	40 – 19
3D7–83320–10	40 – 6
39P–83330–00	40 – 11
39P–83340–00	40 – 15
4GY–83350–00	46 – 31
39P–83371–00	46 – 43
39P–83500–00	41 – 1
4XV–83513–00	41 – 5
39P–83559–00–P0	42 – 1
39P–83559–00–P1	42 – 1
39P–83559–00–P2	42 – 1
39P–83615–00	41 – 2
4XV–83755–03	45 – 15
5EB–83912–03	44 – 2
5JJ–83913–00	44 – 11
5VS–83922–00	35 – 9
4XV–83929–00	44 – 7
2C0–83945–00	44 – 3
5LV–83951–00	44 – 6
39P–83969–00	44 – 12
39P–83975–00	44 – 16

CODIGO Nº	REF. Nº
4HM–83980–00	35 – 12
39P–84118–00	35 – 22
39P–84119–00	42 – 31
20S–84300–00	42 – 5
4K0–84314–G0	42 – 6
39P–8431R–00	42 – 28
5JW–84346–00	42 – 9
5DM–84347–00	42 – 8
5JW–84397–00	42 – 7
39P–84710–00	43 – 1
1A2–84714–41	43 – 3
39P–84735–00	43 – 2
3C3–84736–00	43 – 4
2D1–84737–00	43 – 5
4HC–84744–00	43 – 13
2D1–84745–00	43 – 12
3Y6–85130–02	22 – 37
5VY–85720–00	45 – 11
8CC–85790–01	45 – 2
8GL–85885–00	11 – 19
5YU–85886–00	45 – 28
5VY–85896–00	45 – 25
39P–8591A–00	46 – 6
39P–8592A–00	13 – 2
5VY–8A8E0–00	45 – 12
5VY–8A8E1–00	45 – 21
3D9–H3333–10	40 – 4
	40 – 9
	40 – 14
	40 – 18
3D9–H333A–00	40 – 3
	40 – 17
3D9–H334A–00	40 – 8
	40 – 13
5P0–H5885–00	11 – 13
2D1–W0041–00	35 – 2
5VX–W0042–50	37 – 6
39P–W0045–00	31 – 8
	31 – 19
5VX–W0046–00	33 – 12
5SL–W0047–00	33 – 5
3GM–W0047–10	31 – 5
	31 – 16
3MA–W0047–10	31 – 7
	31 – 18
1UY–W0048–00	33 – 16
4SV–W0057–00	31 – 6
	31 – 17

CODIGO Nº	REF. Nº
5SL–W0057–00	33 – 4
4SV–W0057–10	31 – 4
	31 – 15
2TV–W2470–00	29 – 22
2D1–W2587–00	35 – 1
39P–W8250–00	46 – 5
39P–Y2410–00–01	28 – 1
39P–Y2410–00–02	28 – 1
39P–Y2410–00–03	28 – 1
90101–08013	24 – 2
90101–10025	36 – 3
90105–06027	1 – 7
90105–06065	6 – 14
90105–06066	6 – 21
90105–06078	38 – 5
90105–07004	5 – 4
90105–08101	14 – 13
90105–08180	22 – 40
90105–10211	24 – 27
	25 – 4
90105–10283	24 – 24
90105–10290	45 – 6
90105–10638	31 – 25
90109–05005	10 – 25
	10 – 27
90109–06100	14 – 14
90109–06172	22 – 28
90109–06253	22 – 8
90109–064G6	31 – 2
90109–066F0	1 – 25
90109–08170	13 – 5
90109–08195	46 – 36
90109–08203	36 – 14
	36 – 28
90109–083G4	33 – 2
90109–085G6	36 – 63
90110–05028	28 – 20
90110–05112	28 – 11
90110–06102	24 – 39
90110–06161	6 – 34
	6 – 41
	7 – 15
	8 – 9
	14 – 7
	45 – 18
	45 – 23
90110–06164	18 – 16
90110–06167	6 – 24

CODIGO Nº	REF. Nº
90110–06172	7 – 35
	15 – 38
90110–06173	8 – 6
90110–06175	1 – 24
	45 – 27
90110–06176	16 – 15
90110–06182	8 – 14
	9 – 13
	15 – 31
	19 – 12
90110–06212	1 – 15
90110–06232	29 – 6
90110–06253	5 – 8
90110–06255	15 – 15
90110–06276	15 – 35
90110–06277	15 – 34
90110–06320	15 – 22
90110–06321	15 – 21
90110–06323	15 – 12
90110–06331	15 – 29
	15 – 41
90110–08071	36 – 23
	36 – 40
90110–08099	15 – 13
90110–10024	21 – 8
	21 – 11
90110–10028	36 – 10
90111–05015	36 – 20
	36 – 38
90111–05019	28 – 30
90111–05026	37 – 24
90111–06030	22 – 5
90111–06038	10 – 29
	21 – 25
90111–06059	41 – 9
90111–06060	13 – 11
90111–06079	7 – 45
90111–06098	20 – 22
90111–06127	42 – 18
	42 – 23
	42 – 27
90111–10039	36 – 21
	36 – 32
90116–08087	1 – 10
90116–10023	14 – 9
90116–10032	14 – 8
90116–10048	32 – 15
90119–06230	23 – 15

CODIGO Nº	REF. Nº
90119–06257	17 – 21
90119–09012	14 – 10
90149–06022	6 – 42
90149–06064	15 – 6
90149–06067	38 – 3
90149–06134	29 – 24
90149–06298	23 – 5
90149–06302	22 – 2
	24 – 35
	35 – 25
90153–06002	6 – 37
90154–05035	28 – 18
90157–05025	36 – 13
	36 – 27
90157–10001	21 – 4
90159–05035	43 – 7
90160–05012	22 – 36
	41 – 6
90160–05013	10 – 28
90164–05001	42 – 13
90167–05076	42 – 2
90170–06228	20 – 18
90170–08010	37 – 10
90176–06014	7 – 6
90176–10075	1 – 14
90176–28083	26 – 9
90179–08410	13 – 4
90179–10025	21 – 9
	21 – 12
90179–10029	1 – 12
90179–20007	17 – 23
90179–22019	18 – 37
90179–30006	26 – 5
90183–04039	46 – 35
90183–05042	22 – 25
	42 – 17
	42 – 22
90183–05074	41 – 10
90183–05M02	22 – 20
	28 – 27
90183–06069	42 – 19
	42 – 24
90185–10012	32 – 16
90185–10023	36 – 4
90185–18009	24 – 30
90185–24007	32 – 23
90201–04030	46 – 34
90201–05017	13 – 12

CODIGO Nº	REF. Nº
90201–05036	22 – 27
	41 – 7
90201–05043	22 – 38
90201–06086	28 – 6
90201–06431	15 – 7
90201–06589	16 – 14
90201–08054	36 – 59
90201–08057	24 – 4
90201–08066	37 – 19
90201–10020	21 – 7
90201–10021	32 – 17
90201–10029	17 – 28
90201–10035	36 – 9
90201–10039	45 – 5
90201–10050	1 – 11
	1 – 13
90201–10065	26 – 19
90201–10068	36 – 64
90201–12575	20 – 9
90201–12790	45 – 1
90201–16027	36 – 5
90201–18013	24 – 31
90201–20016	16 – 3
90201–20017	16 – 9
90201–22015	18 – 36
90201–25020	32 – 24
90201–257H0	18 – 38
90201–281U8	26 – 8
90202–05002	42 – 3
90202–05224	28 – 31
90202–30235	26 – 6
90206–17084	36 – 22
	36 – 33
90208–20001	17 – 22
90209–08295	36 – 24
	36 – 41
90209–25011	18 – 4
90209–28008	18 – 22
90214–25003	18 – 13
90214–25004	18 – 12
90214–28002	18 – 28
90214–29002	18 – 27
90240–08005	37 – 18
90269–06001	7 – 49
	21 – 19
90269–06003	21 – 34
90269–07007	24 – 15
90269–07008	24 – 16

CODIGO Nº	REF. Nº
90269–07076	22 – 29
90269–07077	22 – 9
	22 – 31
90269–08058	21 – 15
90282–03001	45 – 4
90338–06004	26 – 15
90338–07043	29 – 9
90340–12003	15 – 46
90340–14132	9 – 6
90340–18002	1 – 3
90340–32004	15 – 24
90387–05042	43 – 8
90387–06009	24 – 40
90387–06055	28 – 8
90387–06112	6 – 40
90387–06130	24 – 14
	24 – 38
90387–06170	41 – 8
90387–06219	24 – 34
90387–062M9	23 – 14
90387–065J6	22 – 4
90387–065L7	21 – 31
90387–06M60	35 – 24
90387–07391	7 – 34
	29 – 5
90387–08021	36 – 58
90387–0804S	20 – 4
90387–10043	24 – 26
	25 – 3
90387–10050	36 – 8
90387–10097	36 – 62
90387–1012A	24 – 11
	24 – 23
	25 – 2
90387–1211D	20 – 12
90387–25007	18 – 7
90387–25008	18 – 31
90387–28003	18 – 2
90387–28004	18 – 25
90387–28014	32 – 19
90387–28015	32 – 18
90387–31003	18 – 20
90401–10020	35 – 18
	37 – 22
90401–20145	9 – 1
90413–07023	7 – 20
90430–06014	1 – 9
	6 – 36

CODIGO Nº	REF. Nº
90430–06166	14 – 18
90430–08143	15 – 26
90430–10005	35 – 19
	37 – 23
90430–10148	45 – 10
90445–08022	23 – 11
90445–087K6	23 – 13
90445–19002	36 – 7
90446–15386	37 – 4
90450–22017	7 – 42
90450–32001	7 – 38
	7 – 40
90450–32006	6 – 33
90450–35001	7 – 9
90450–38040	6 – 3
	7 – 10
90450–56007	10 – 3
	10 – 5
90461–10010	28 – 17
90462–08057	45 – 19
90464–07259	22 – 12
90464–07M40	23 – 18
90464–10008	34 – 14
90464–12036	46 – 37
90464–12089	42 – 33
90464–13073	7 – 23
	46 – 38
90464–13077	46 – 41
90464–15195	46 – 39
90464–16005	28 – 40
90464–16006	21 – 27
90464–16021	22 – 22
	22 – 35
90464–17003	24 – 17
90464–23003	11 – 36
90464–26001	12 – 10
90464–51001	45 – 17
90464–59001	46 – 45
90465–08053	45 – 14
90465–08054	45 – 24
90465–10098	42 – 14
	46 – 44
90465–13M11	11 – 38
90467–080A1	23 – 12
	23 – 17
90467–09006	28 – 22
90467–10039	7 – 22
90467–11044	37 – 16

CODIGO Nº	REF. Nº
90467–11090	7 – 12
	7 – 19
	7 – 43
90467–14015	10 – 21
90467–14171	10 – 15
90467–17003	10 – 17
	10 – 19
90467–17128	12 – 8
90467–180A0	12 – 9
90467–18172	12 – 4
	12 – 6
90467–200A0	6 – 32
	6 – 43
	7 – 50
90468–15139	34 – 8
90480–01333	21 – 18
90480–01559	23 – 6
90480–08264	10 – 13
90480–11009	43 – 9
90480–12003	24 – 33
90480–12010	6 – 39
90480–12072	22 – 3
90480–13004	22 – 34
90480–13005	35 – 26
90480–13010	8 – 4
90480–13014	15 – 48
90480–14004	35 – 23
	42 – 12
90480–14030	21 – 30
90480–14604	29 – 4
90480–15363	7 – 33
90480–18276	22 – 23
90480–20001	23 – 16
90501–064L1	19 – 9
90501–12743	36 – 44
	36 – 51
90501–230A0	17 – 20
90506–18020	36 – 6
90506–20014	37 – 3
90508–18051	17 – 27
90508–32020	20 – 11
90520–01002	43 – 6
90520–05013	22 – 18
90520–05014	22 – 17
90520–05017	41 – 4
90520–10010	44 – 15
91312–04025	46 – 33
91312–05010	28 – 12

CODIGO Nº	REF. Nº
91312–06010	42 – 10
91312–06016	10 – 1
	28 – 5
91312–06020	20 – 14
91312–06025	9 – 10
91312–06040	6 – 19
	39 – 12
91312–08030	26 – 11
	26 – 14
	27 – 33
91314–08040	27 – 31
91314–10040	21 – 6
91317–05035	34 – 12
91317–06050	34 – 6
91380–06010	46 – 40
91380–06014	15 – 49
91401–20012	37 – 20
91401–25015	36 – 48
	36 – 55
91702–08040	36 – 47
	36 – 54
91808–16023	1 – 4
	1 – 5
	1 – 6
91808–30031	6 – 23
92012–05012	42 – 30
92012–05030	46 – 2
92012–06014	24 – 13
	24 – 37
	46 – 46
92012–06020	21 – 29
92012–08035	36 – 60
92014–08012	15 – 27
92017–08020	36 – 39
92902–04100	35 – 14
92902–04600	35 – 15
92902–05200	43 – 10
92902–10200	26 – 18
92907–05600	7 – 32
92907–08600	17 – 2
93102–12106	20 – 7
93102–12372	6 – 8
93102–15212	17 – 5
93102–25017	30 – 5
93102–40330	18 – 33
93106–40013	32 – 3
93106–40041	32 – 13
93109–17071	24 – 10

CODIGO Nº	REF. Nº
93109–17071	24 – 22
93210–04092	14 – 3
93210–06667	6 – 27
	8 – 12
93210–09165	8 – 11
93210–14003	8 – 8
	14 – 6
93210–15566	9 – 4
93210–16325	15 – 43
93210–18397	16 – 10
93210–22298	8 – 3
93210–22382	15 – 9
	15 – 45
93210–235A1	6 – 29
	6 – 38
	7 – 16
93210–27194	15 – 18
93210–27370	6 – 30
93210–32172	15 – 25
93210–357A2	6 – 25
93210–46044	6 – 4
93210–49046	7 – 5
93210–57003	15 – 40
93305–20605	18 – 18
93306–00106	6 – 7
	19 – 3
93306–00304	17 – 19
93306–07806	32 – 4
93306–20124	15 – 2
93306–20230	16 – 11
93306–20352	30 – 4
93306–20531	32 – 2
93306–205A2	18 – 39
93306–20652	18 – 11
93306–20659	32 – 11
93306–27209	18 – 14
93310–232R9	17 – 24
93315–31502	17 – 6
93315–31758	24 – 21
93315–41762	24 – 9
93315–42536	24 – 7
93317–11096	17 – 4
93317–11295	20 – 6
93317–42599	24 – 6
93399–99932	26 – 3
93399–99957	26 – 1
93440–28184	18 – 5
93440–31187	18 – 23

CODIGO Nº	REF. Nº
93440–52009	18 – 40
93440–62032	18 – 34
93450–18157	3 – 9
	3 – 11
93501–04011	36 – 45
	36 – 52
93603–12007	6 – 12
	6 – 17
93603–17070	6 – 15
93605–10108	15 – 3
93607–44002	5 – 11
93610–20189	15 – 20
93900–00030	30 – 7
	32 – 8
94112–17109	30 – 6
94118–17072	32 – 7
94580–25078	8 – 1
94582–31122	32 – 25
94591–68124	5 – 5
94682–31031	32 – 26
94701–00318	1 – 16
95022–06008	46 – 19
95022–06010	29 – 10
95022–06014	7 – 48
95022–06016	45 – 13
95022–06090	28 – 9
95022–10016	21 – 39
95024–06012	1 – 8
	7 – 2
95024–06025	6 – 5
95024–08035	13 – 9
95027–06020	44 – 5
95302–08600	24 – 3
95304–06700	20 – 19
95602–05100	22 – 39
	43 – 11
95602–05200	46 – 3
95602–10200	21 – 5
	24 – 25
	24 – 28
	25 – 5
	26 – 17
95607–06200	44 – 4
95617–06100	35 – 8
95702–06500	22 – 6
	29 – 12
	29 – 20
	35 – 17

CODIGO Nº	REF. Nº
95802–06008	36 – 35
95802–06012	42 – 32
95802–06014	35 – 27
95802–06016	7 – 37
95812–06010	9 – 11
95812–06050	14 – 17
95812–06060	14 – 15
95812–06070	14 – 16
95812–08016	21 – 37
95812–08050	14 – 11
95812–08060	14 – 12
95814–10045	36 – 65
95822–06025	46 – 25
97007–05012	7 – 31
97702–50014	22 – 26
97702–50016	22 – 24
	42 – 29
97702–50520	45 – 29
97702–60520	45 – 31
97706–04012	43 – 14
98502–04012	35 – 13
98507–04010	44 – 10
98507–05022	44 – 17
98507–05030	44 – 13
98507–05045	44 – 14
98704–03020	44 – 9
98902–05008	28 – 16
99001–07600	17 – 3
99002–10600	20 – 8
99009–10400	17 – 29
99480–10018	15 – 11
99530–08012	9 – 8
99530–10014	14 – 4
99530–10114	1 – 27
	2 – 3

CODIGO Nº	REF. Nº

CODIGO Nº	REF. Nº

CODIGO Nº	REF. Nº

CODIGO Nº	REF. Nº

CODIGO Nº	REF. Nº