YAMAHA

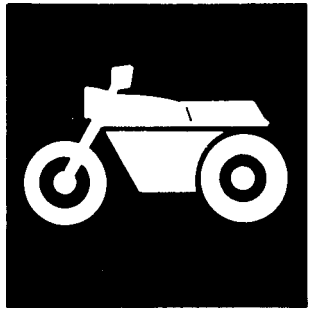

CATALOGO DE REPUESTOS

FZS600 (5RT1) ESPAÑA

2A5RT–352S1

YAMAHA GENUINE Parts & Accessories

A2

FZS600
CATALOGO DE REPUESTOS
©2001, Yamaha Motor Co., Ltd.
1ªedición, Agosto 2001
Reservados todos los derechos.
Se prohíbe expresamente toda reimpresión
o utilización no autorizada de este manual
sin el consentimiento por escrito de
Yamaha Motor Co., Ltd.

A3

A4

Este Catálogo de Respuetos corresponds a las piezas para el(los) modelo(s) del recuadro siguiente. Al formular el pedido de repuestos, se ruega citar este Catálogo de Repuestos y especificar correctamente los números de parte y los nombres de parte.

FZS600(5RT1)

1. Las modificaciones y agregados que se hayan realizado después de la edición de este Catálogo de Repuestos, serán anunciados en las Informaciones de Recambios Yamaha.
2. Abreviaciones
   En este. Catálogo de Repuestos se emplean las siguientes abreviaciones.
   - “UR” Usar el número de partes especificado
   - “UN” Usar la cantidad necesaria
   - “AP” Piezas sustitutivas
   - “LM” Fabricación local (Partes necesarias que se pedirán localmente)
   - “F#” No. de bastidor aplicable
3. Las piezas suministradas como conjunto se describen con un punto (.) que precede al nombre de la pieza como se indica a continuación.

   EJEMPLO

   CONJUNTO CARBURADOR
   .INYECTOR, piloto
   .BOQUILLA, principal
4. Cantidad de componentes de un conjunto
   La numeración que aparece a la derecha de cada descripción, indica la cantidad de piezas por cada unidad de conjunto.

   EJEMPLO

PIEZAS NO.	DESCRIPCION	CANT.	OBSERVACION
2F5–83310–60	ENSAMBLAJE DE LA LUZ	2	
115–83311–60	.BOMBILLA (6V–1 8W)	1	
1M1–83309–60	.REFLECTOR	1	

5. Los colores de los componentes se indican como sigue en la columna de“OBSERVACIONES”.

   EJEMPLO

PIEZAS NO.	DESCRIPCION	CANT.	OBSERVACION
2N4–24110–00–X5	.COMP. DEL TANQUE	2	MXR
3J1–24240–10	.GRAFICO, DEL TANQUE	1	para MXR

6. Números de Serie

   No. de Serie del motor.

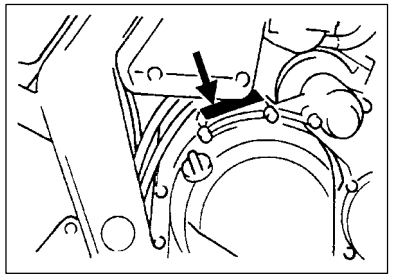

   No. de Serie del bastidor

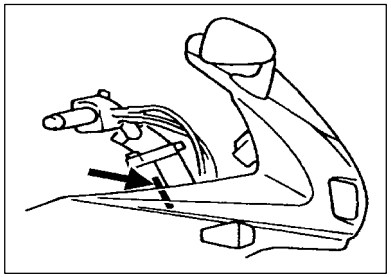

7. Debe tenerse en cuenta que las ilustraciones sirven como guia para la búsqueda de las referencias y no deben usarse para el montaje. Durante el montaje, se recomienda usar el manual de Taller correspondiente.
8. EL asterisco (*)antes del número de referencia indica los elementos modificados después de la primera edición.

ROTULO DE MODELO

(1) El rótulo llamada “Rótulo de Modelo” está en la ubicación indicada abajo en el (3). Cuando se utilice este catálogo de partes, se ruega cotejar entre el “código de modelo–número de código de producción” del catálogo y el” código de modelo–número de código de producción” indicado en el Rótulo de Modelo fijado en el producto correspondiente.

(2) Indicación del “Rótulo de Modelo”

a b	
○ xxxx – xxx	
● x c	

a: Código de tipo de Modelo

b: Número de código de Producción

c: Tipo de color

○	4TW1–010
●	A

(3) Ubicación de fijación del Rótulo de Modelo

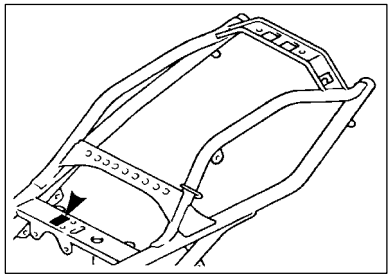

(4) Código de Modero–Número de código de Producción del Modelo Listado en este Catálogo de Partes

Código de Modelo	Número de Código de Producción	Pais(destine)	Código de Modelo	Número de Código de Producción	Pais(destine)
5RT1	040	SPAIN			
	041	SPAIN			

(5) Información de Color

Código de tipo de color	Código de color	Nombre de color	Abreviatura
A	0564	DEEP PURPLISH BLUE METALLIC C	DPBMC
B	0755	SILVER 1	S1
C	0251	REDDISH YELLOW COCKTAIL 1	RYC1

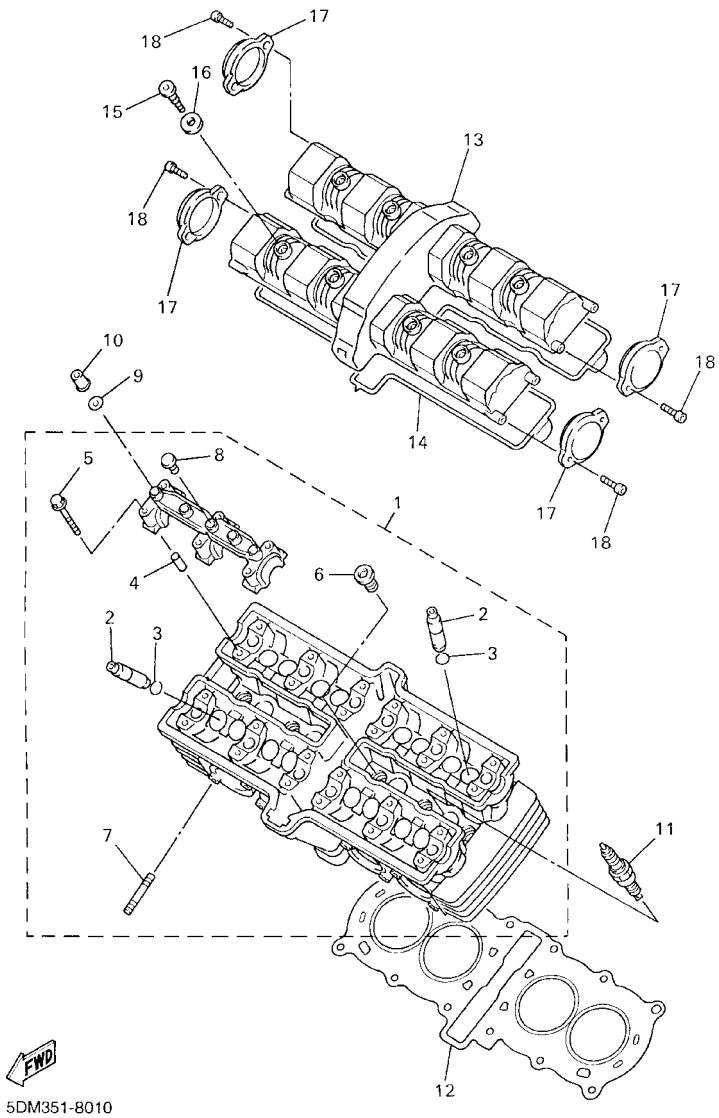

FIG. 1 CULATA DE CILINDRO

REF. NO.	CODIGO NO.	DESCRIPCION	5RT1					OBSERVACION
1	5DM–11101–00	CULATA DE CILINDRO COMPLETA	1					
2	5DM–11133–10	.GUIA VALV.DE ADM.	16					
3	93440–07149	.BOLA	16					
4	91808–16023	.PASADOR DE CLAVIJA	12					
5	90105–06384	.TORNILLO	24					
6	90340–12112	.TORNILLO, DE DRENAJE	6					
7	90116–06475	.ESPARRAGO	8					
8	90338–08174	.TAPON	12					
9	90201–090P4	ARANDELA PLANA	12					
10	90179–09612	TUERCA	12					
11	94701–00329	BUJIA (U24ESR–N)	4					UR
	94701–00330	BUJIA (NGK CR8E)	4					UR
12	5DM–11181–00	JUNTA, DE CULATA 1	1					
13	4YR–11191–00	TAPA CULATA DE CILINDRO 1	1					
14	4YR–11193–00	EMPAQUE	1					
15	90109–066F0	PERNO	8					
16	4KM–1111G–00	CASQUILLO DE GOMA	8					
17	4YR–1111M–00	CUBIERTA 1	4					
18	91314–05014	PERNO	8					

FIG. 2 CILINDRO

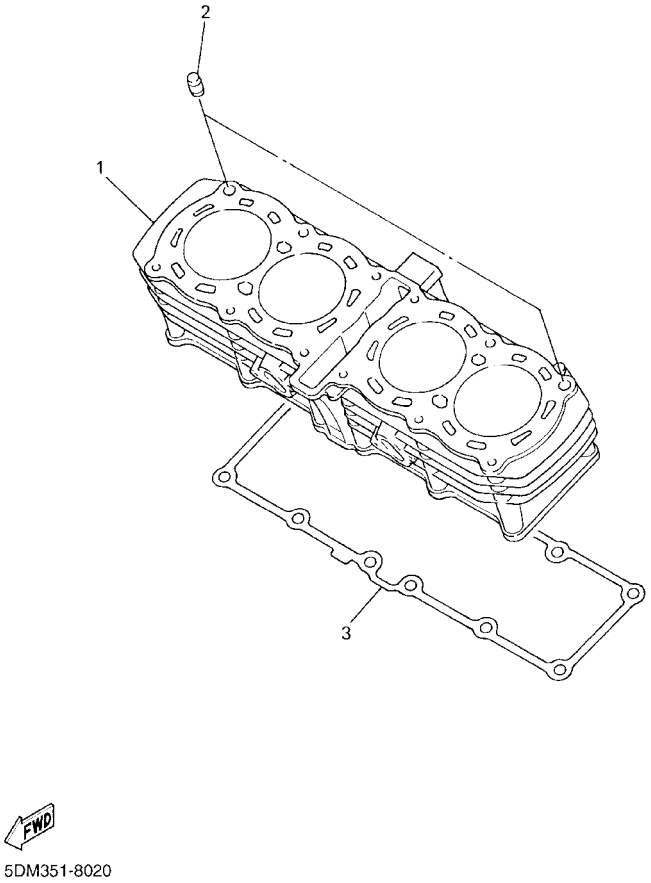

REF. NO.	CODIGO NO.	DESCRIPCION	5RT1					OBSERVACION
1	5DM–11311–00	CILINDRO 1	1					
2	93612–16254	PASADOR DE CLAVIJA	2					
3	5DM–11351–00	JUNTA, DE CILINDRO	1					

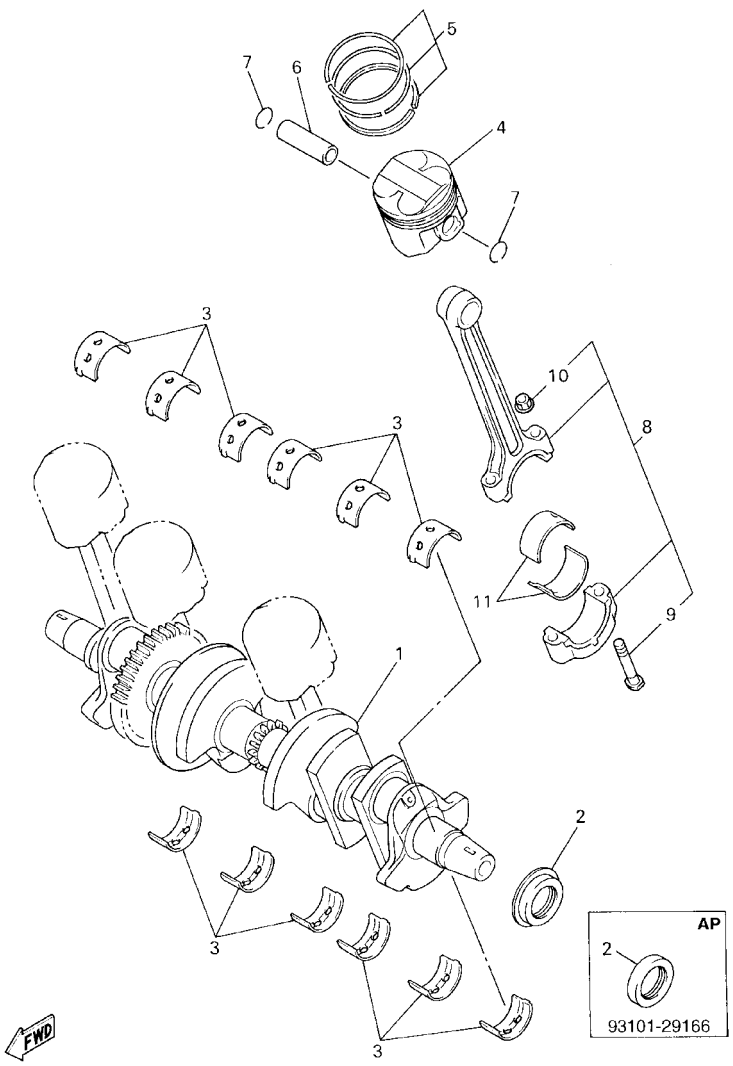

5DM351-8030

FIG. 3 CIGUENAL. PISTON

REF. NO.	CODIGO NO.	DESCRIPCION	5RT1					OBSERVACION
1	5DM–11411–01	CIGUENAL	1					
2	93101–29165	SELLO ACEITE	1					UR
	93101–29166	SELLO ACEITE	1					AP
3	1WG–11416–00	COJINETE PLANO 1	12					UR BLUE
	1WG–11416–10	COJINETE PLANO 1	12					UR BLACK
	1WG–11416–20	COJINETE PLANO 1	12					UR BROWN
	1WG–11416–30	COJINETE PLANO 1	12					UR GREEN
	1WG–11416–40	COJINETE PLANO 1	12					UR YELLOW
	1WG–11416–50	COJINETE PLANO 1	12					UR PINK
4	5DM–11631–00	PISTON(STD)	4					
5	4JH–11603–00	JUEGO DE ANILLOS (ESTD)	4					
6	4JH–11633–00	PASADOR, PISTON	4					
7	90468–12069	PRESILLA	8					
8	5DM–11650–00	BIELA COMPLETA	4					
9	4JH–11654–00	.TORNILLO DE BIELA	2					
10	90179–07652	.TUERCA	2					
11	1WG–11656–00	COJINETE PLANO	8					UR BLUE
	1WG–11656–10	COJINETE PLANO	8					UR BLACK
	1WG–11656–20	COJINETE PLANO	8					UR BROWN
	1WG–11656–30	COJINETE PLANO	8					UR GREEN

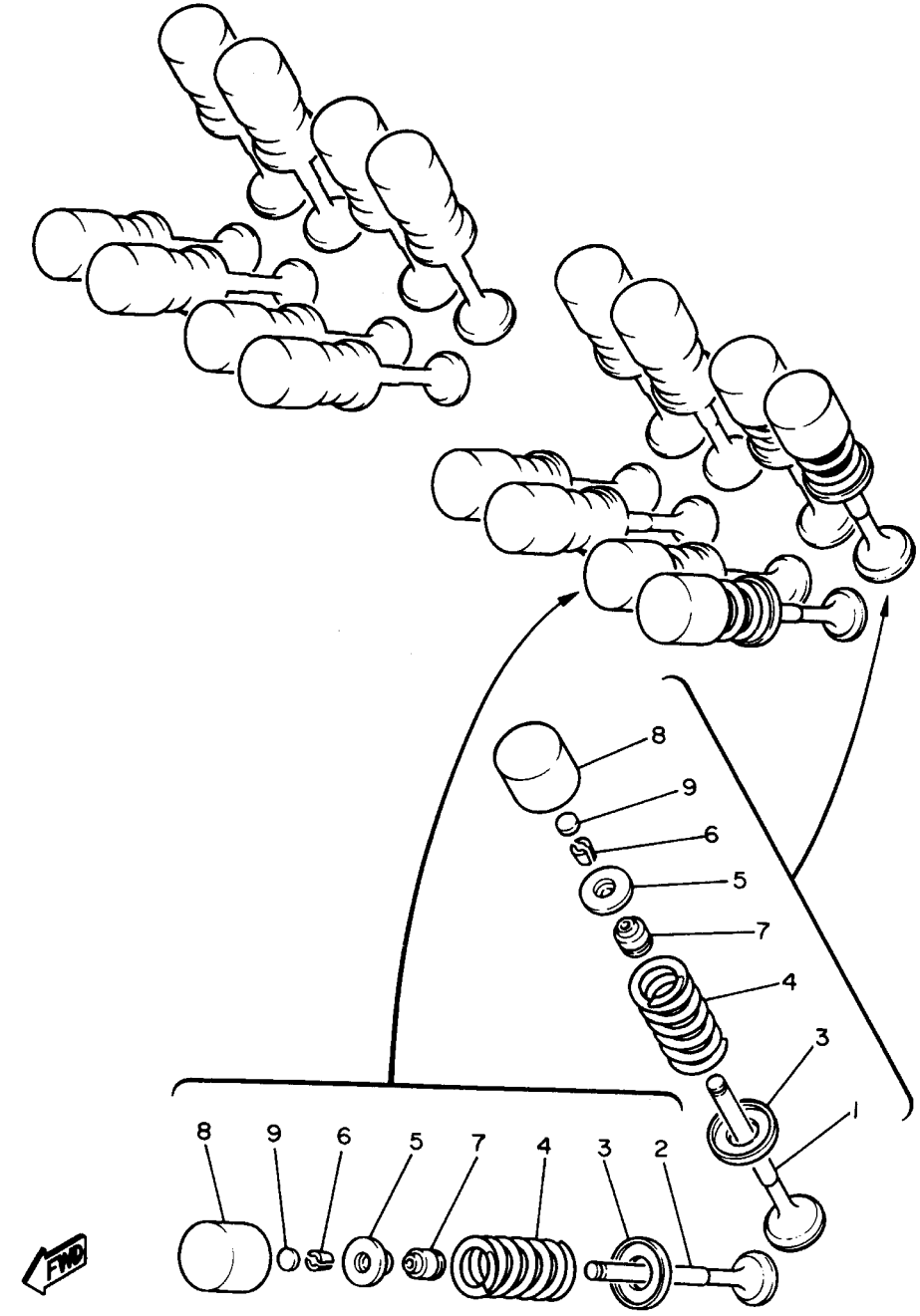

1WG010-6040

FIG. 4 VALVULA

REF. NO.	CODIGO NO.	DESCRIPCION	5RT1					OBSERVACION
1	5DM–12111–00	VALVULA DE ADMISION	8					
2	5DM–12121–00	VALVULA DE ESCAPE	8					
3	1WG–12116–00	ASIENTO RESORTE DE VALVULA	16					
4	4TV–12113–00	RESORTE VALVULA INTERNA	16					
5	3TJ–12117–00	RETEN RESORTE DE VALVULA	16					
6	1HX–12118–00	SEGURO DE VALVULA	32					
7	4TV–12119–00	SELLO DE ACEITE VALVULA	16					
8	3FV–12153–10	LEVANTADOR DE VALVULA	16					UR AMARILLO
	3FV–12153–09	LEVANTADOR DE VALVULA (O/S)	16					AP GREEN
9	1HX–12168–00	COJIN, AJUSTADOR 2 (1.20)	16					UR
	1HX–12168–20	COJIN, AJUSTADOR 2 (1.25)	16					UR
	1HX–12168–40	COJIN, AJUSTADOR 2 (1.30)	16					UR
	1HX–12168–60	COJIN, AJUSTADOR 2 (1.35)	16					UR
	1HX–12168–80	COJIN, AJUSTADOR 2 (1.40)	16					UR
	1HX–12168–A0	COJIN, AJUSTADOR 2 (1.45)	16					UR
	1HX–12168–F0	COJIN, AJUSTADOR 2 (1.50)	16					UR
	1HX–12168–H1	COJIN, AJUSTADOR 2 (1.55)	16					UR
	1HX–12168–K1	COJIN, AJUSTADOR 2 (1.60)	16					UR
	1HX–12168–M1	COJIN, AJUSTADOR 2 (1.65)	16					UR
	1HX–12168–R1	COJIN, AJUSTADOR 2 (1.70)	16					UR
	1HX–12168–U1	COJIN, AJUSTADOR 2 (1.75)	16					UR
	1HX–12168–W1	COJIN, AJUSTADOR 2 (1.80)	16					UR
	1HX–12168–Y1	COJIN, AJUSTADOR 2 (1.85)	16					UR
	1HX–12169–11	COJIN, AJUSTADOR 2 (1.90)	16					UR
	1HX–12169–31	COJIN, AJUSTADOR 2 (1.95)	16					UR
	1HX–12169–50	COJIN, AJUSTADOR 2 (2.00)	16					UR
	1HX–12169–70	COJIN, AJUSTADOR 2 (2.05)	16					UR

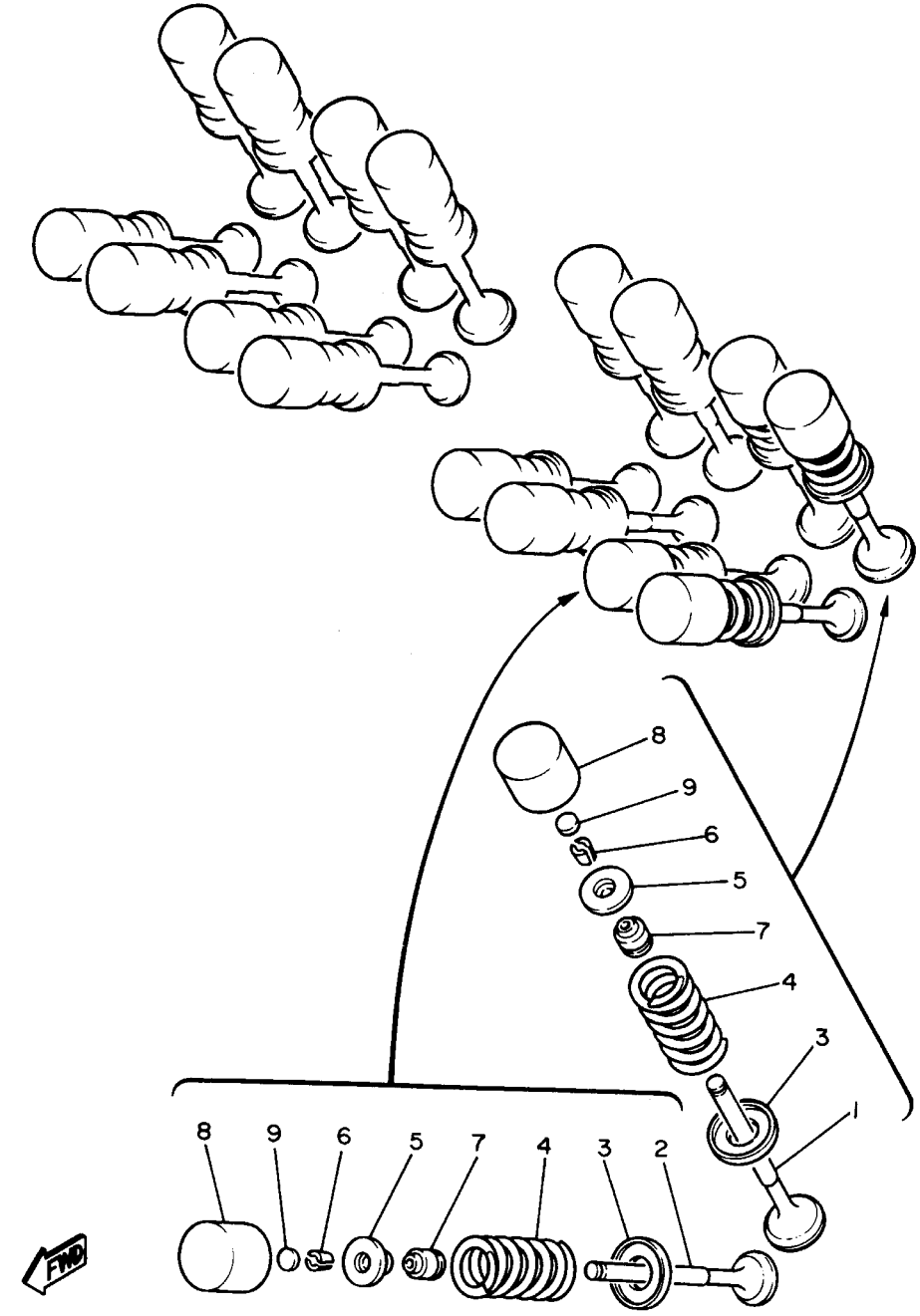

1WG010-6040

FIG. 4 VALVULA

REF. NO.	CODIGO NO.	DESCRIPCION	5RT1					OBSERVACION
9	1HX–12169–90	COJIN, AJUSTADOR 2 (2.10)	16					UR
	1HX–12169–E0	COJIN, JUSTADOR 2 (2.15)	16					UR
	1HX–12169–G0	COJIN, AJUSTADOR 2 (2.20)	16					UR
	1HX–12169–J0	COJIN, AJUSTADOR 2 (2.25)	16					UR
	1HX–12169–L0	COJIN, AJUSTADOR 2 (2.30)	16					UR
	1HX–12169–N0	COJIN, AJUSTADOR 2 (2.35)	16					UR
	1HX–12169–T0	COJIN, AJUSTADOR 2 (2.40)	16					UR

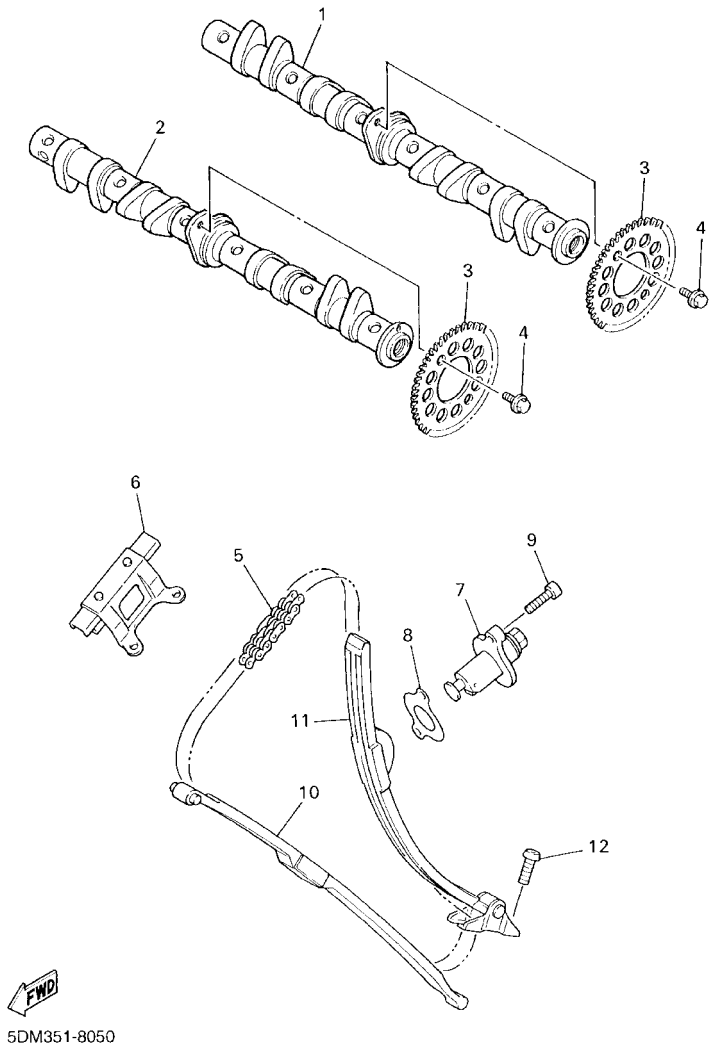

FIG. 5 ARBOL DE LEV. CADENA

REF. NO.	CODIGO NO.	DESCRIPCION	5RT1					OBSERVACION
1	5DM–12171–00	ARBOL DE LEVAS 1	1					
2	5DM–12181–00	ARBOL DE LEVAS 2	1					
3	4YR–12176–00	CATALINA DE CADENA	2					
4	90105–07342	TORNILLO	4					
5	94591–47130	CADENA	1					
6	4YR–12241–00	TOPE DE GUIA 2	1					
7	5DM–12210–00	TENSOR CADENA DE LEVA	1					
8	4HM–12213–00	EMPAQUE DE CAJA TENSOR	1					
9	91317–06025	PERNO	2					
10	4YR–12251–00	AMORTIGUADOR CADENA 1	1					
11	4YR–12252–00	AMORTIGUADOR CADENA 2	1					
12	90109–065A8	PERNO	2					

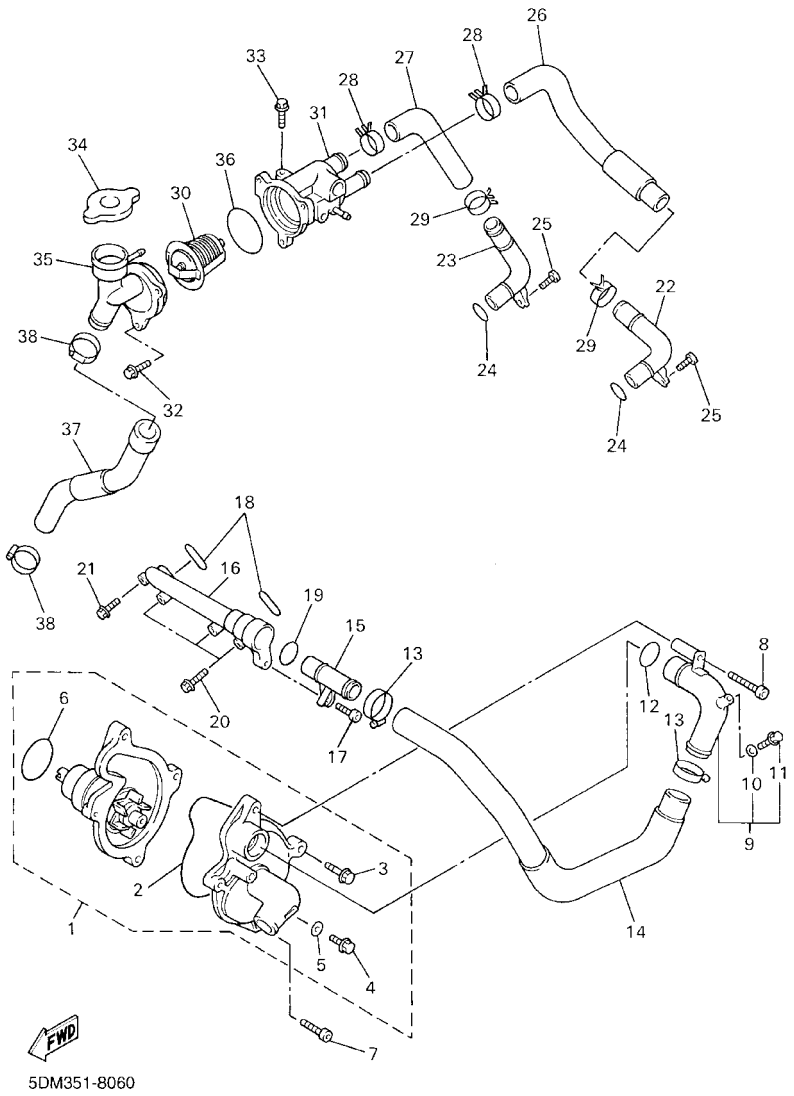

FIG. 6 BOMBA DE AGUA

REF. NO.	CODIGO NO.	DESCRIPCION	5RT1					OBSERVACION
1	5RT–Y1242–00	BOMBA DE AGUA COMPLETA	1					
2	1WG–12439–00	.ANILLO O	1					
3	90105–066A5	.TORNILLO	2					
4	95024–06012	.PERNO, DE BRIDA	1					
5	90430–06014	.JUNTA	1					
6	93210–33133	.ANILLO O	1					
7	91314–06035	PERNO	1					
8	91314–06065	PERNO	1					
9	5DM–12481–00	TUBO 1	1					
10	90430–06014	.JUNTA	1					
11	90153–06029	.TORNILLO HEXAGONAL	1					
12	93210–21190	ANILLO O	1					
13	90450–32015	BRIDA, MANGUERA	2					
14	4YR–12576–00	MANGUERA 1	1					
15	5DM–12482–00	TUBO 2	1					
16	4YR–12446–00	JUNTA	1					
17	91314–06012	PERNO	1					
18	93210–17746	ANILLO O	2					
19	93210–21190	ANILLO O	1					
20	95027–06040	PERNO, DE BRIDA	3					
21	95027–06025	PERNO, DE BRIDA	1					
22	4YR–12483–00	TUBO 3	1					
23	4YR–12484–00	TUBO 4	1					
24	93210–15414	ANILLO O	2					
25	91317–06010	PERNO	2					
26	4YR–12577–00	MANGUERA 2	1					
27	4YR–12578–00	MANGUERA 3	1					

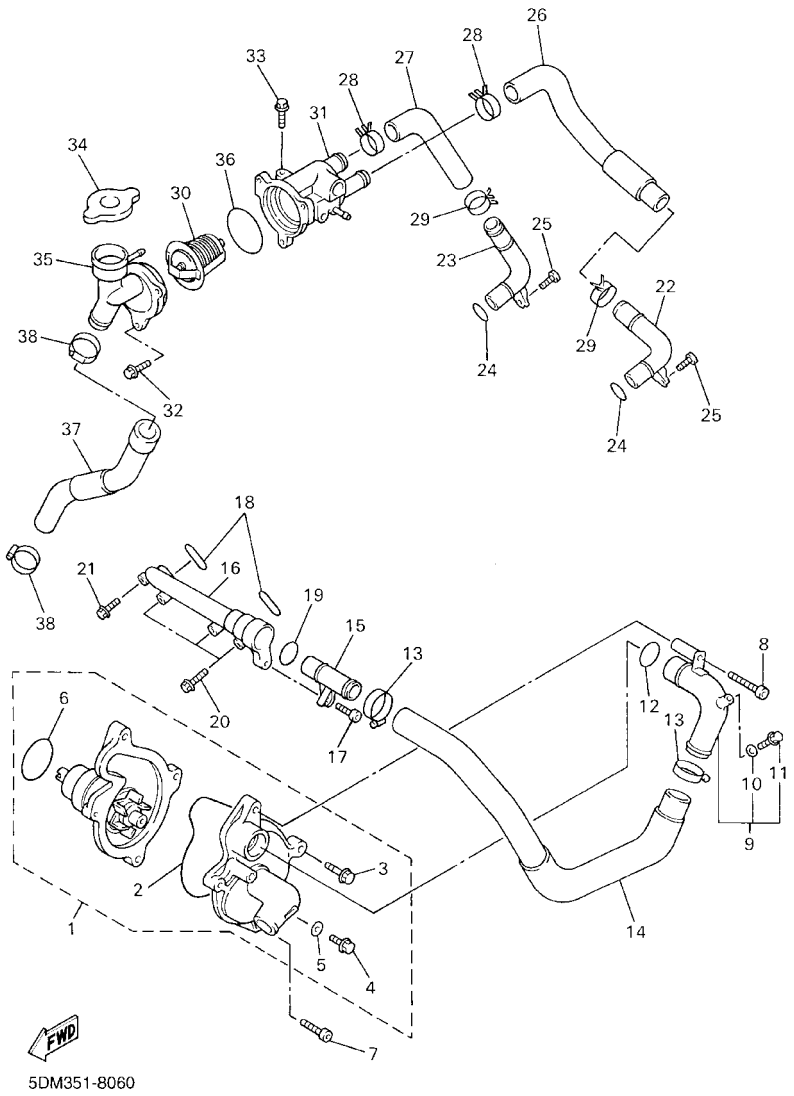

FIG. 6 BOMBA DE AGUA

REF. NO.	CODIGO NO.	DESCRIPCION	5RT1					OBSERVACION
28	90467–23190	PRESILLA	2					
29	90467–22100	PRESILLA	2					
30	1AE–12410–00	TERMOSTATO CONJUNTO	1					
31	4YR–12417–00	ENCAJE DE TERMOSTATO	1					
32	95027–06020	PERNO, DE BRIDA	3					
33	95027–06030	PERNO, DE BRIDA	1					
34	22W–12462–00	TAPON, DEL RADIADOR	1					
35	1AE–12591–01	SOPORTE	1					
36	93210–49046	ANILLO O	1					
37	4YR–12579–00	MANGUERA 4	1					
38	90450–38040	BRIDA, MANGUERA	2					

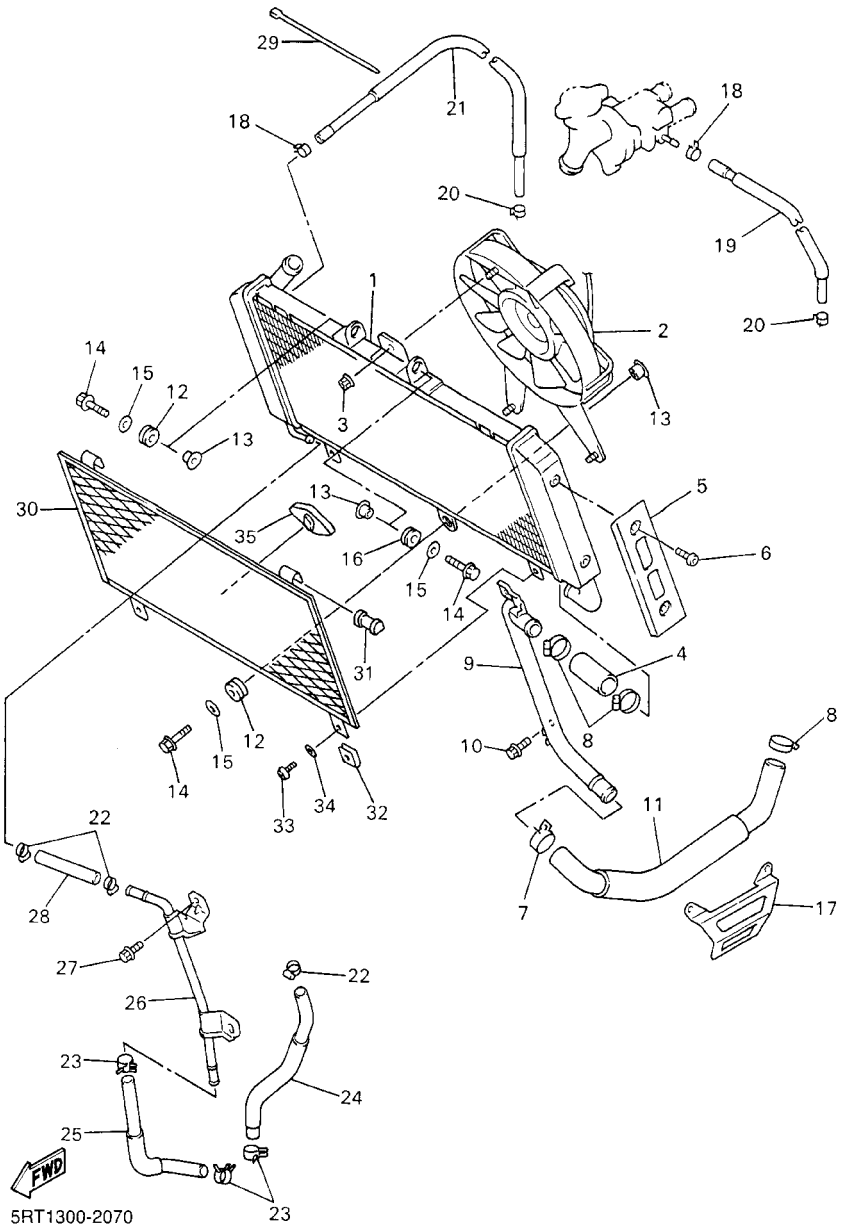

FIG. 7 RADIADOR. MANGUELA

REF. NO.	CODIGO NO.	DESCRIPCION	5RT1					OBSERVACION
1	5RT–12461–00	RADIADOR COMPLETO	1					
2	5DM–12405–01	COMPRESOR	1					
3	90179–06403	TUERCA	3					
4	5DM–12588–00	MANGUERA 5	1					
5	5DM–1240J–00	CUBIERTA DE RADIADOR COMPLETO	2					
6	92014–06010	PERNO	4					
7	90467–26189	PRESILLA	1					
8	90450–32015	BRIDA, MANGUERA	3					
9	5DM–12485–01	TUBO 5	1					
10	95817–06012	TUERCA DE REBORDE	2					
11	4YR–12589–00	MANGUERA 6	1					
12	90480–15363	TAPON	2					
13	90387–07391	COLLAR	3					
14	95807–06025	TUERCA DE REBORDE	3					
15	90201–06071	ARANDELA PLANA	3					
16	90480–10542	TAPON	1					
17	4YR–12498–00	PROTECTOR	1					
18	90467–08092	PRESILLA	2					
19	5DM–1243A–00	TUBO 1	1					
20	90467–06194	PRESILLA	2					
21	5DM–1243E–00	TUBO 2	1					
22	90450–22017	BRIDA, MANGUERA	3					
23	90467–15168	PRESILLA	3					
24	5DM–12589–00	MANGUERA 6	1					
25	5DM–12551–00	55 PLACA	1					
26	5DM–12476–01	TUBO 6	1					
27	95817–06012	TUERCA DE REBORDE	2					

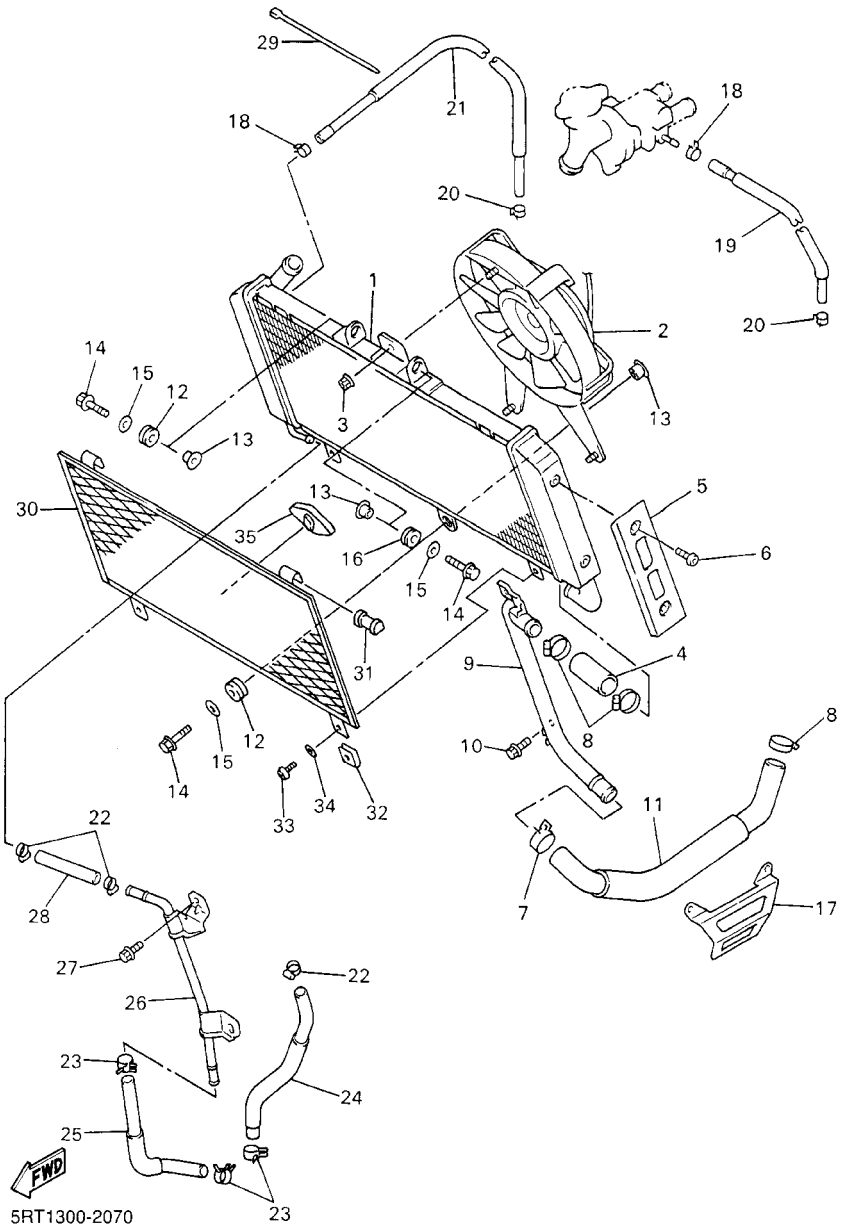

FIG. 7 RADIADOR. MANGUELA

REF. NO.	CODIGO NO.	DESCRIPCION	5RT1					OBSERVACION
28	5DM–12552–00	MANGUERA 8	1					
29	1UA–82591–00	BANDA	2					
30	5RT–12467–00	CUBIERTA DEL RADIADOR	1					
31	1UF–12435–00	EMPAQUE	2					
32	90183–05024	TUERCA DE RESORTE	2					
33	98507–05010	TORNILLO DE CABEZA CON PLANA	2					
34	92907–05600	ARANDELA	2					
35	5LV–12465–00	AMORTIGUADOR DE RADIADOR	1					

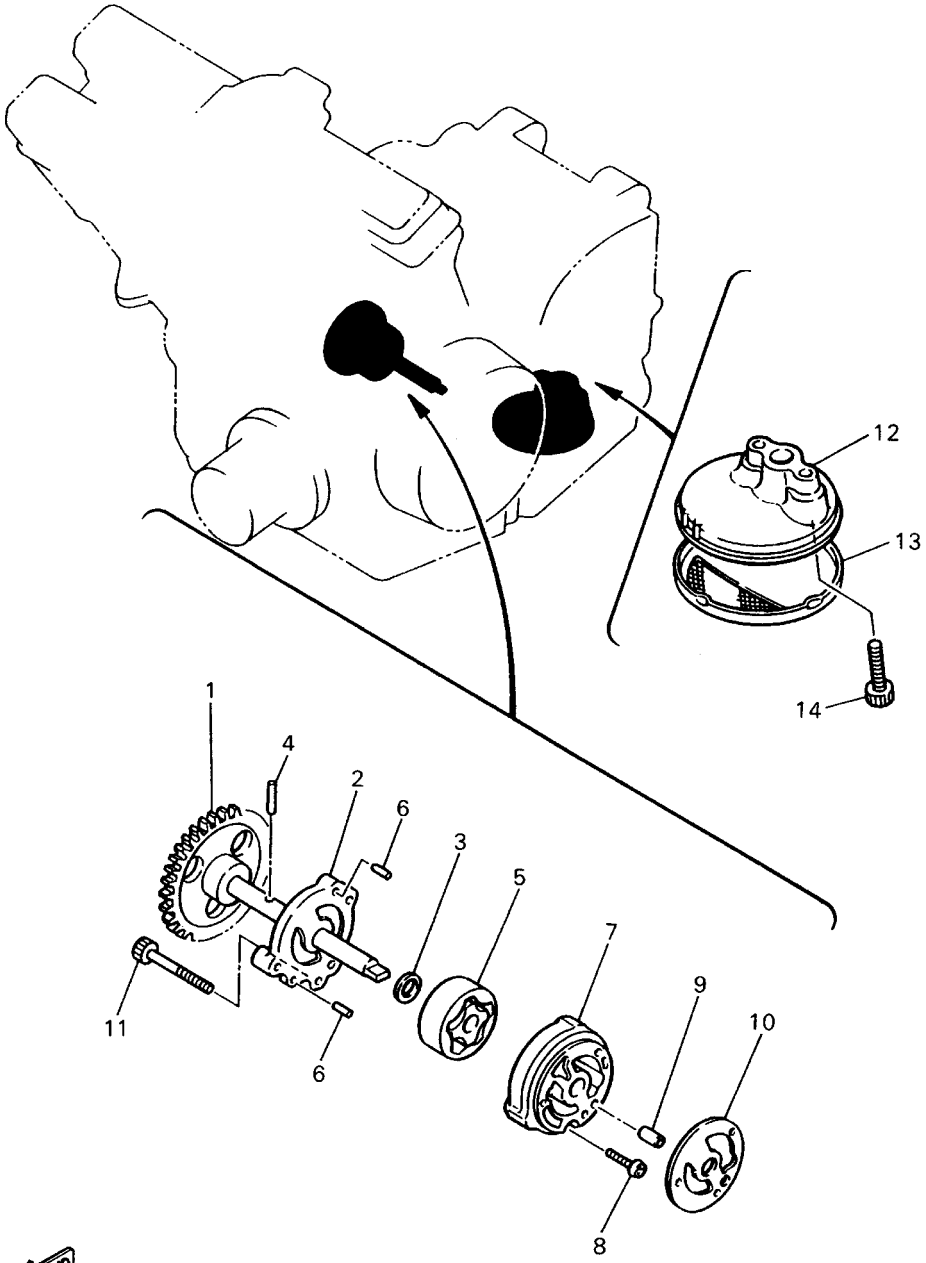

4JH351-4080

FIG. 8 BOMBA DE ACEITE

REF. NO.	CODIGO NO.	DESCRIPCION	5RT1					OBSERVACION
1	4JH–13330–00	EJE DE BOMBA COMPLETO	1					
2	1WG–13316–00	CUBIERTA DE BOMBA	1					
3	90201–113K2	ARANDELA PLANA	1					
4	93603–17070	PASADOR DE CLAVIJA	1					
5	1WG–13310–00	ROTOR COMPLETO 1	1					
6	93603–09106	PASADOR DE CLAVIJA	2					
7	1WG–13336–00	CAJA DE ROTOR	1					
8	98507–06020	TORNILLO DE CABEZA CON PLANA	1					
9	99530–08012	PASADOR, DE ESPIGA	1					
10	1WG–13329–00	EMPAQUE TAPA DE BOMBA	1					
11	90110–06130	TORNILLO ALLEN	3					
12	3TJ–13412–00	CAJA DE FILTRO	1					
13	4H7–13411–02	FILTRO DE ACEITE	1					
14	90110–06225	TORNILLO ALLEN	2					

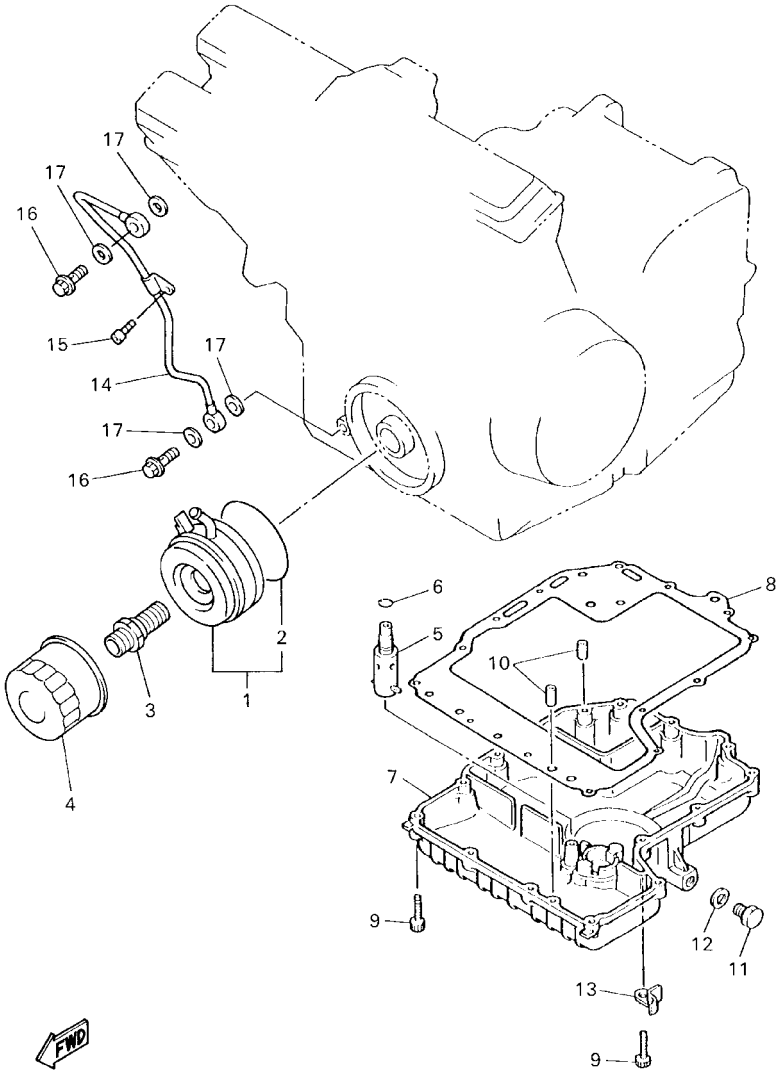

5DM351-8090

FIG. 9 ENFRIADOR DE AIRE

REF. NO.	CODIGO NO.	DESCRIPCION	5RT1					OBSERVACION
1	5DM–13470–00	ENFRIADOR DE ACEITE COMPLETO	1					
2	4JH–13473–00	.ANILLO O	1					
3	90401–20170	PERNO DE UNION	1					
4	5DM–13440–00	ELEMENTO FILTRO DE ACEITE	1					
5	4G0–13490–01	VALVELA DE DESCOMPRESION	1					
6	93210–10096	ANILLO O	1					
7	4YR–13417–00	TAPA DE FILTRO	1					
8	4TV–13414–00	EMPAQUE DE TAPA FILTRO	1					
9	91317–06025	PERNO	14					
10	99530–08016	PASADOR, DE ESPIGA	2					
11	90340–14132	TORNILLO, DE DRENAJE	1					
12	214–11198–01	EMPAQUE	1					
13	90465–10306	BRIDA	1					
14	5RT–13161–00	TUBO CONDUCTOR 1	1					
15	91317–06010	PERNO	1					
16	90401–10106	PERNO DE UNION	2					
17	90430–10188	JUNTA	4					

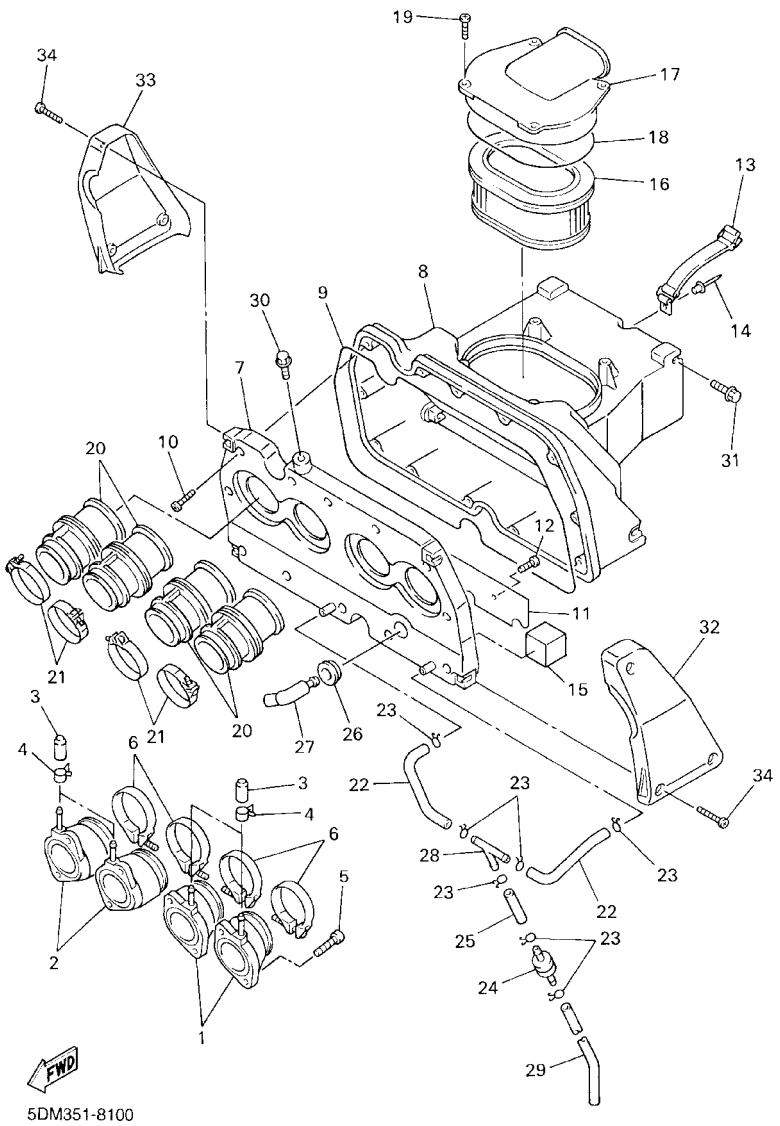

FIG. 10 ADMISION

REF. NO.	CODIGO NO.	DESCRIPCION	5RT1					OBSERVACION
1	5DM–13586–01	TOBERA DE CARBURADOR 1	2					
2	5DM–13596–01	TOBERA DE CARBURADOR 2	2					
3	16G–13569–00	TAPON CIEGO	4					
4	90467–10039	PRESILLA	4					
5	91317–06020	PERNO	8					
6	90450–47001	BRIDA, MANGUERA	4					
7	4YR–14411–00	CAJA FILTRO DEL AIRE 1	1					
8	4YR–14421–01	CAJA FILTRO DEL AIRE 2	1					
9	4BR–14452–00	SELLO	1					
10	97707–50125	TORNILLO ROSCA HEMBRA	12					
11	5DM–14477–00	PLACA	1					
12	97707–50120	TORNILLO ROSCA HEMBRA	2					
13	4HM–21647–00	BANDA	1					
14	90267–40054	REMACHE CIEGO	1					
15	5DM–14476–00	SELLO	1					
16	4YR–14451–01	ELEMENTO DEL FILTRO DEL AIRE	1					
17	5DM–14412–00	TAPA CAJA DEL FILTRO 1	1					
18	3GM–14452–00	SELLO	1					
19	97707–50130	TORNILLO ROSCA HEMBRA	4					
20	5DM–14453–00	UNION DEL FILTRO DEL AIRE 1	4					
21	90450–58090	BRIDA, MANGUERA	4					
22	4YR–1443E–00	TUBO, DRENAJE	2					
23	90467–10041	PRESILLA	7					
24	4X7–2149Y–00	FILTRO COMPLETO	1					
25	90445–11147	TUBO (L50)	1					
26	31A–14435–00	ANILLO PROTECTOR	1					
27	31A–14419–00	TUBO	1					

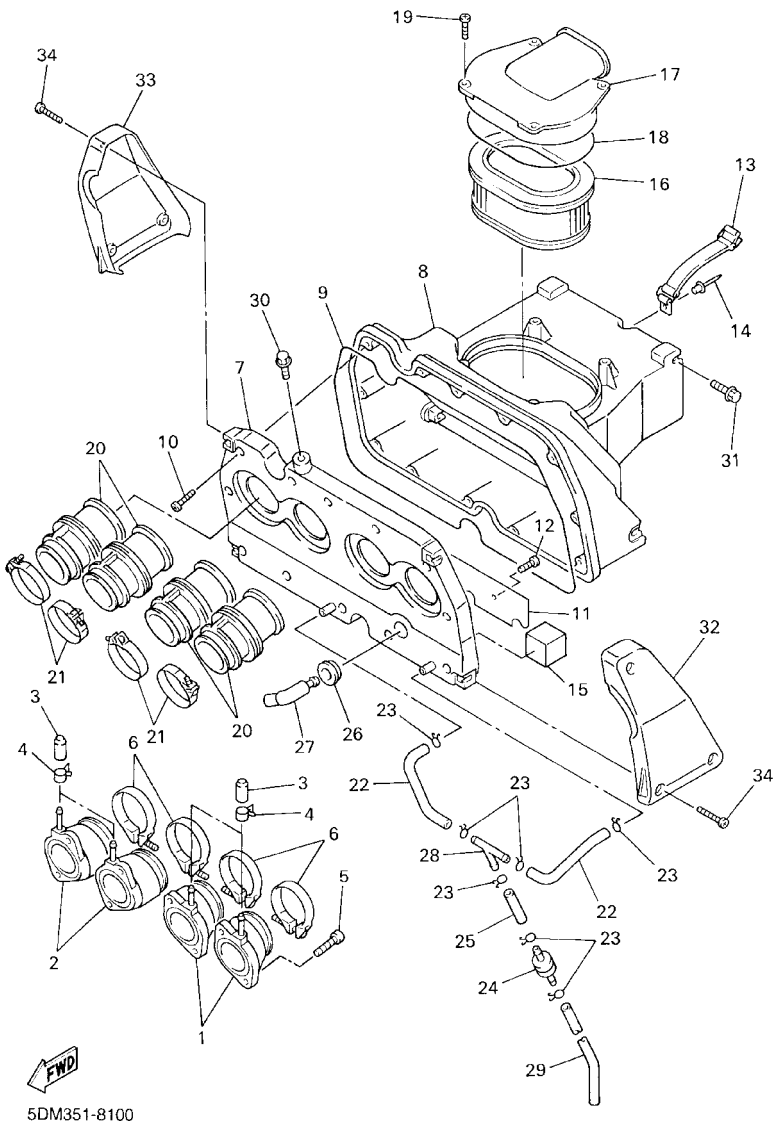

FIG. 10 ADMISION

REF. NO.	CODIGO NO.	DESCRIPCION	5RT1					OBSERVACION
28	90413–07007	UNION	1					
29	90445–11637	TUBO (L340)	1					
30	95807–06010	TUERCA DE REBORDE	1					
31	95807–06016	TUERCA DE REBORDE	2					
32	4YR–14417–00	CUBIERTA 1	1					
33	4YR–14418–00	CUBIERTA 2	1					
34	90154–06075	TORNILLO DE LIGAR	6					

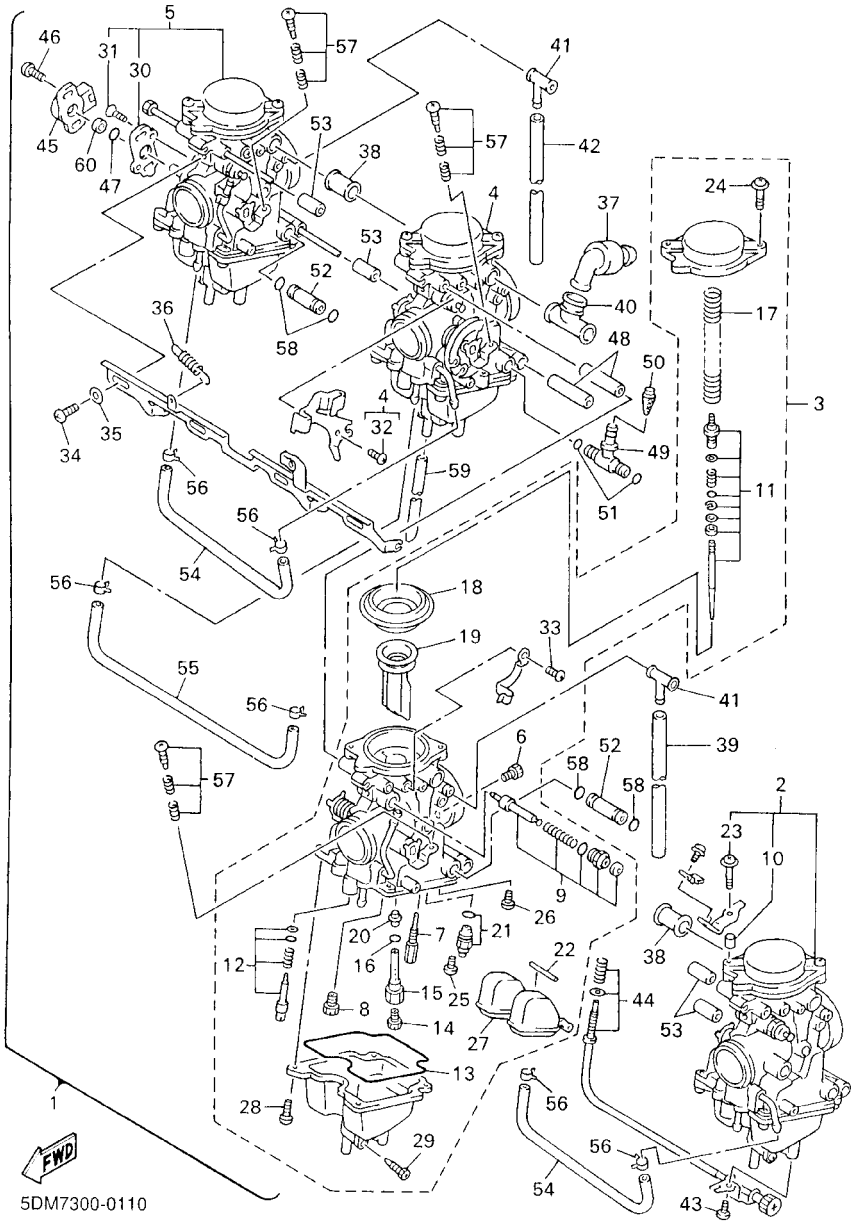

FIG. 11 CARBURADOR

REF. NO.	CODIGO NO.	DESCRIPCION	5RT1					OBSERVACION
1	5RT–14900–00	CARBURADOR COMPLETO	1					
2	5RT–14901–00	.CARBURADOR COMPLETO 1	1					
3	5RT–14902–00	.CARBURADOR COMPLETO 2	1					
4	5RT–14903–00	.CARBURADOR COMPLETO 3	1					
5	5RT–14904–00	.CARBURADOR COMPLETO 4	1					
6	1HX–14231–26	..INYECTOR,PRINCIPAL (#130)	1					
7	4KM–14142–12	..SURTIDOR DE RALENTI (# 12.5)	1					
8	3G2–14231–00	..INYECTOR,PRINCIPAL (0.6)	1					
9	5DM–1410A–00	..JUEGO DE ARRANQUE	1					
10	4KM–14194–00	..ANILLO	1					
11	5DM–1490J–00	..CJTO. AGUJA	1					
12	5MP–14105–00	..TORNILLO DE PILOTO	1					
13	5DM–14561–00	..ANILLO O	1					
14	3G2–14231–23	..INYECTOR,PRINCIPAL (#115)	1					
15	5DM–14261–00	..SOSTEN	1					
16	583–14561–00	..ANILLO O	1					
17	5DM–14933–00	..RESORTE DE DIAFRAGMA	1					
18	5DM–14940–00	..DIAFRAGMA COMPLETO	1					
19	5DM–14113–00	..VALVULA DE ACELERACION 2	1					
20	5DM–14141–40	..BOQUILLA PRINCIPAL	1					
21	4SV–14107–10	..VALVULA DE AGUJA	1					
22	127–14186–00	..PASADOR DE LA BOYA	1					
23	97890–05016	..TORNILLO DE CABEZA CON PLAN	1					
24	4KM–14216–00	..TORNILLO	1					UR #1
	4KM–14216–00	..TORNILLO	2					UR #2,3,4
25	98507–04008	..TORNILLO DE CABEZA CON PLAN	1					
26	1FN–14565–00	..TORNILLO	1					

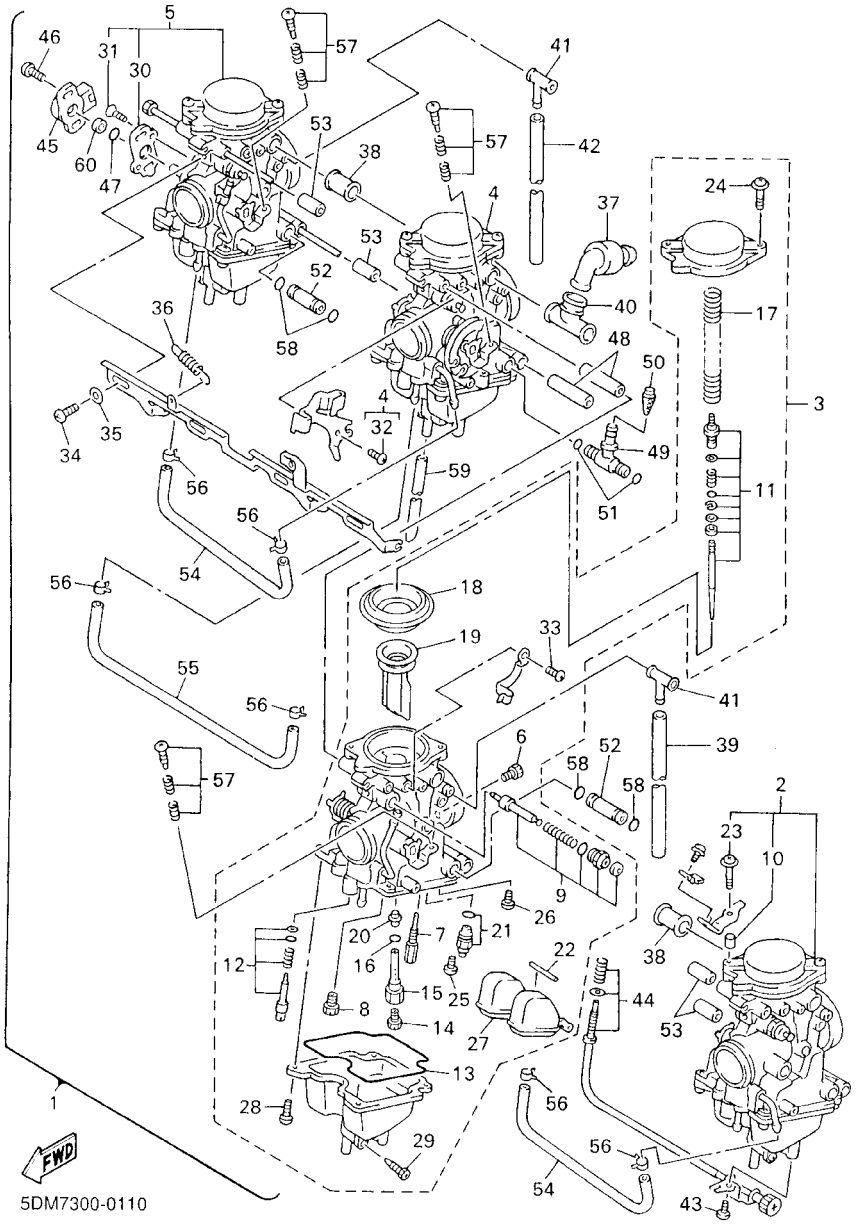

FIG. 11 CARBURADOR

REF. NO.	CODIGO NO.	DESCRIPCION	5RT1					OBSERVACION
27	5DM–14985–00	..BOIA	1					
28	98580–04010	..TORNILLO DE CABEZA CON PLAN	4					
29	12R–14191–00	..TORNILLO, DE DRENAJE	1					
30	5DM–14291–10	..SOPORTE 1	1					
31	98707–04008	..TORNILLO DE CABEZA PLANA	2					
32	98507–05010	..TORNILLO DE CABEZA CON PLAN	1					
33	98507–05008	..TORNILLO DE CABEZA CON PLAN	1					
34	5DM–14565–00	.TORNILLO	3					
35	4NK–14327–00	.EMPAQUE	3					
36	5DM–14935–00	.RESORTE	1					
37	5DM–24515–00	.RED DE FILTRO 2	1					
38	5DM–14348–00	.MANGUERA	2					
39	5DM–14349–00	.TUBO	1					
40	5DM–14396–00	.TUBO	1					
41	5DM–14396–10	.TUBO	2					
42	4XV–90445–10	.TUBO	1					
43	97890–05008	.TORNILLO DE CABEZA CON PLANA	1					
44	5DM–14103–00	.CJTO. TORNILLO DEL RALENTI	1					
45	4SV–85885–00	.TERMICA SENSORIO	1					
46	4HM–14216–00	.TORNILLO	2					
47	4KG–14285–00	.ARANDELA	1					
48	4XV–14149–50	.TUBO	2					
49	5DM–14251–00	.NIPLE	1					
50	1KT–14994–00	.FILTRO	1					
51	3EN–14997–00	.SELLO	2					
52	5DM–14148–00	.TUBO	2					
53	5DM–14149–00	.TUBO	4					

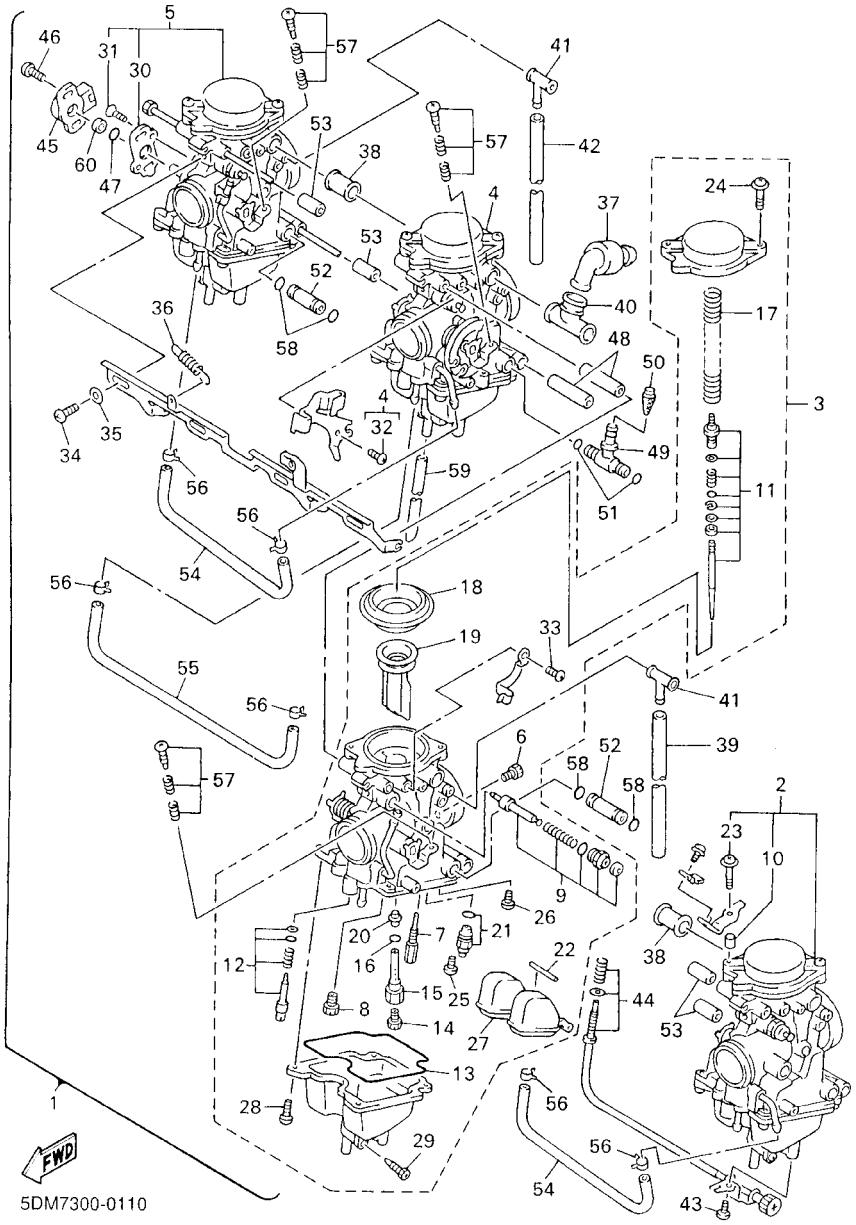

FIG. 11 CARBURADOR

REF. NO.	CODIGO NO.	DESCRIPCION	5RT1					OBSERVACION
54	5DM–14987–00	.TUBO	2					
55	5DM–14987–10	.TUBO	1					
56	5DM–14919–00	.PRESILLA	6					
57	3EN–1490K–00	.JUEGO DE TORNILLOS DE TOPE	3					
58	36Y–14147–00	.ANILLO O	4					
59	5DM–14348–10	.MANGUERA	1					
60	4HM–14239–00	.SELLO	1					

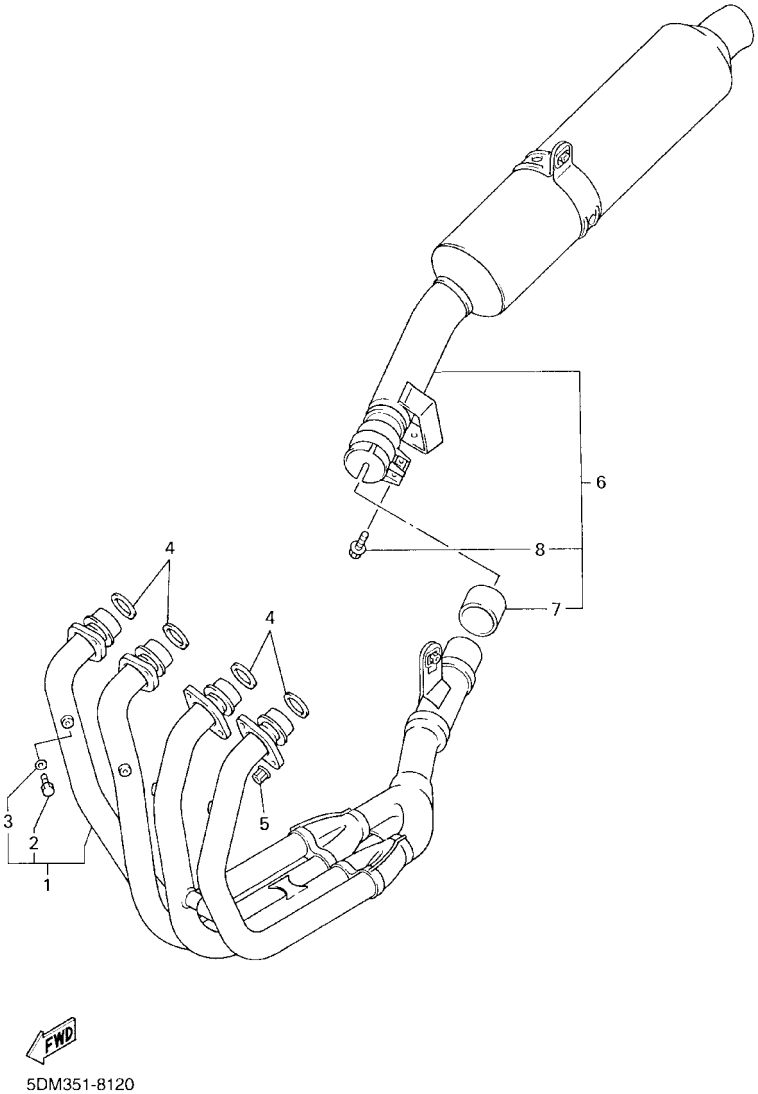

FIG. 12 DESCARGA

REF. NO.	CODIGO NO.	DESCRIPCION	5RT1					OBSERVACION
1	5RT–14602–00	TUBO DE ESPAPE COMPLETO	1					
2	97080–06008	.PERNO	4					
3	92990–06600	.ARANDELA	4					
4	3YF–14613–01	JUNTA, TUBO DE ESCAPE	4					
5	90179–06668	TUERCA	8					
6	5RT–14710–00	TUBO DE ESCAPE COMPLETO 1	1					
7	3XW–14714–00	.EMPAQUE DE SILENCIADOR	1					
8	95814–08025	.TUERCA DE REBORDE	1					

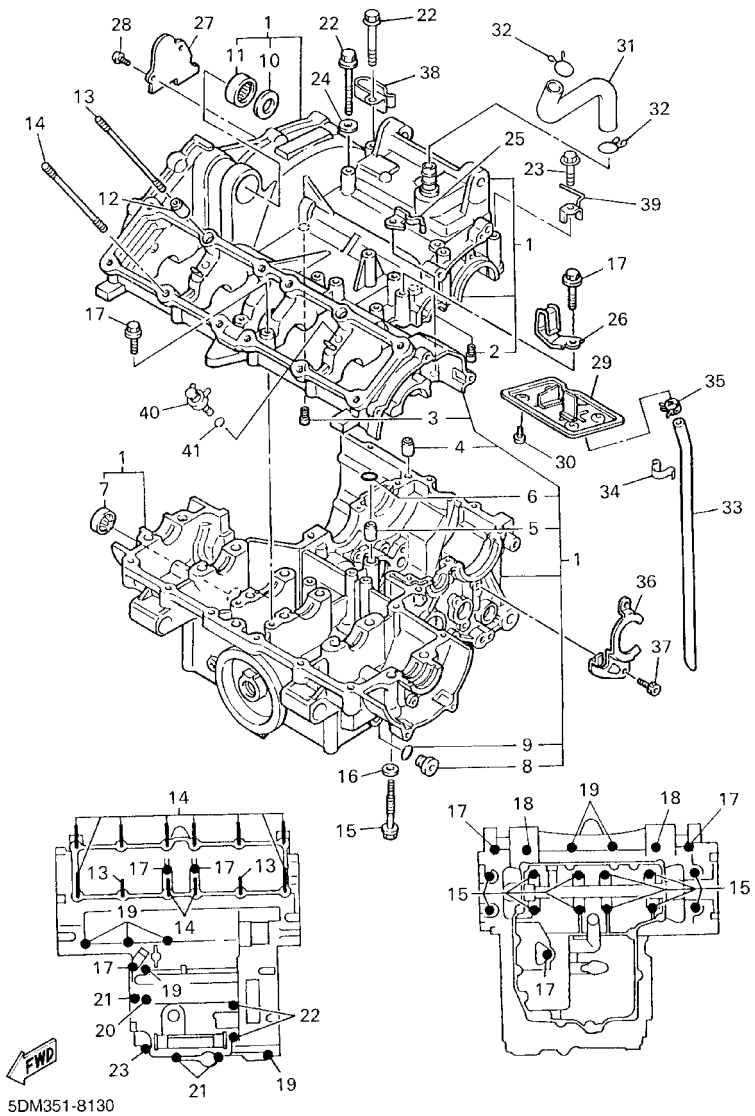

FIG. 13 CARTER

REF. NO.	CODIGO NO.	DESCRIPCION	5RT1					OBSERVACION
1	5DM–15100–02	CARTER COMPLETO	1					
2	11H–15138–00	.BOQUILLA 1	1					
3	26H–15138–00	.BOQUILLA 1	1					
4	99530–12016	.PASADOR, DE ESPIGA	1					
5	4JH–15138–00	.BOQUILLA 1	1					
6	93210–12152	.ANILLO O	1					
7	4H7–15361–00	.MEDIDOR DE NIVEL	1					
8	36Y–15189–00	.TAPON	2					
9	93210–16325	.ANILLO O	2					
10	90201–237K5	.ARANDELA PLANA	1					
11	93315–32516	.COJINETE	1					
12	93612–16254	PASADOR DE CLAVIJA	2					
13	90116–09615	ESPARRAGO	2					
14	90116–09616	ESPARRAGO	10					
15	90105–08630	TORNILLO	12					
16	90201–087K3	ARANDELA PLANA	12					
17	90105–063A6	TORNILLO	6					
18	90105–06024	TORNILLO	2					
19	90105–060A2	TORNILLO	7					
20	90105–063A7	TORNILLO	1					
21	90105–063A8	TORNILLO	3					
22	95817–06090	TUERCA DE REBORDE	2					
23	95817–08070	TUERCA DE REBORDE	1					
24	90430–06166	JUNTA	1					
25	90465–10307	BRIDA	1					
26	90465–10308	BRIDA	1					
27	4JH–11165–00	PLACA RESPIRADERO	1					

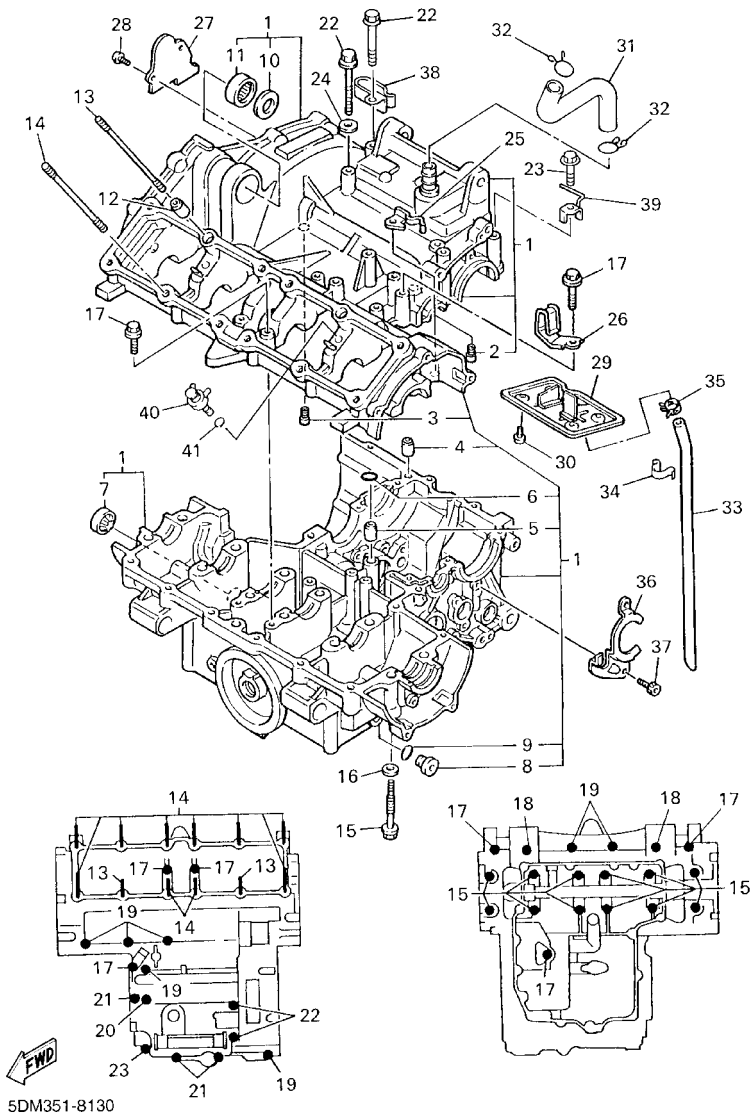

FIG. 13 CARTER

REF. NO.	CODIGO NO.	DESCRIPCION	5RT1					OBSERVACION
28	98507–06012	TORNILLO DE CABEZA CON PLANA	2					
29	5RT–11145–00	PLACA RESPIRADERO 2	1					
30	98507–06012	TORNILLO DE CABEZA CON PLANA	4					
31	4YR–11166–00	TUBO RESPIRADERO 1	1					
32	90467–14015	PRESILLA	2					
33	90445–116E9	TUBO (L249)	1					
34	90465–06289	BRIDA	1					
35	90467–10038	PRESILLA	1					
36	4JH–15381–00	PLACA CUBTA.RESPIRADERO	1					
37	91317–06012	PERNO	2					
38	90465–10393	BRIDA	1					
39	90462–16238	BRIDA	1					
40	5RT–15105–00	BOQUILLA	2					
41	93210–06422	ANILLO O	2					

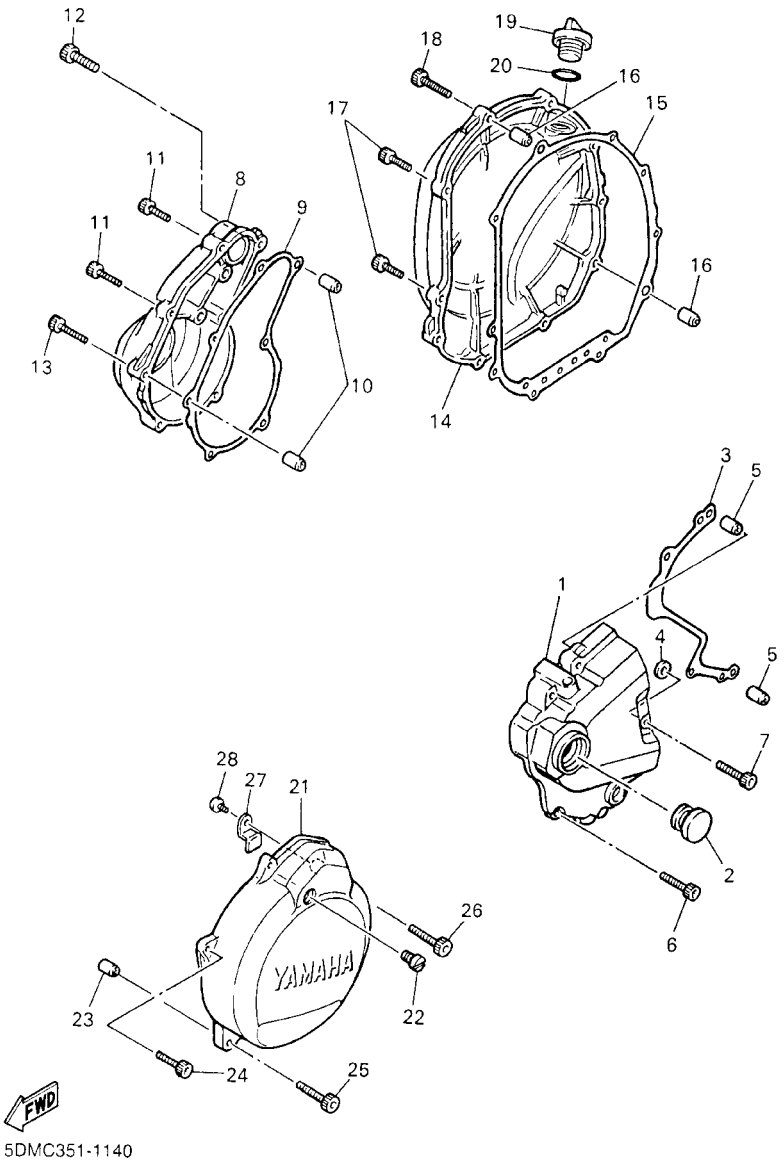

FIG. 14 CUBIERTA DE CARTER 1

REF. NO.	CODIGO NO.	DESCRIPCION	5RT1					OBSERVACION
1	5DM–15411–00	CUBIERTA DE CARTER 1	1					
2	1L9–15417–00	CUBIERTA DE TAPA	1					
3	3HE–15451–10	EMPAQ DE CUBIERTA DE CARTER	1					
4	3HE–15467–10	EMPAQUE	1					
5	99530–08016	PASADOR, DE ESPIGA	2					
6	91314–06040	PERNO	4					
7	91314–06050	PERNO	1					
8	4YR–15421–00	TAPA DE CARTER DERECHA	1					
9	4TV–15461–00	JUNTA TAPA CARTER DRCHO	1					
10	99530–08016	PASADOR, DE ESPIGA	2					
11	91314–06025	PERNO	2					
12	91314–06035	PERNO	4					
13	91314–06045	PERNO	1					
14	4YR–15431–00	CUBIERTA DE CARTER 3	1					
15	4TV–15462–00	EMPAQ CUBIERTA DE CARTER 3	1					
16	99530–08016	PASADOR, DE ESPIGA	2					
17	91314–06025	PERNO	8					
18	91314–06035	PERNO	2					
19	3F9–15362–00	TAPON DEL NIVEL DE ACEITE	1					
20	93210–27194	ANILLO O	1					
21	4YR–15415–00	CUBIERTA DE GENERADOR	1					
22	90340–08014	TORNILLO, DE DRENAJE	1					
23	99530–08016	PASADOR, DE ESPIGA	2					
24	91314–06025	PERNO	3					
25	91314–06035	PERNO	1					
26	91314–06035	PERNO	1					
27	90462–10182	BRIDA	1					

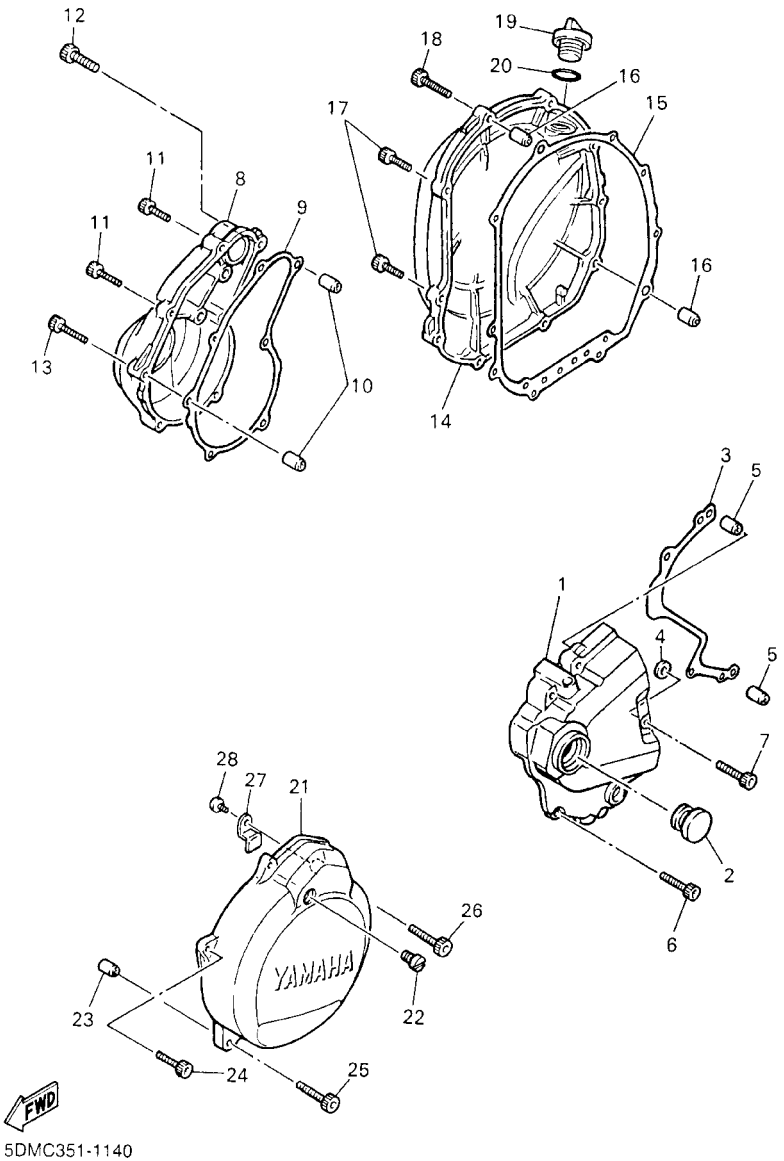

FIG. 14 CUBIERTA DE CARTER 1

REF. NO.	CODIGO NO.	DESCRIPCION	5RT1					OBSERVACION
28	98507–06010	TORNILLO DE CABEZA CON PLANA	1					

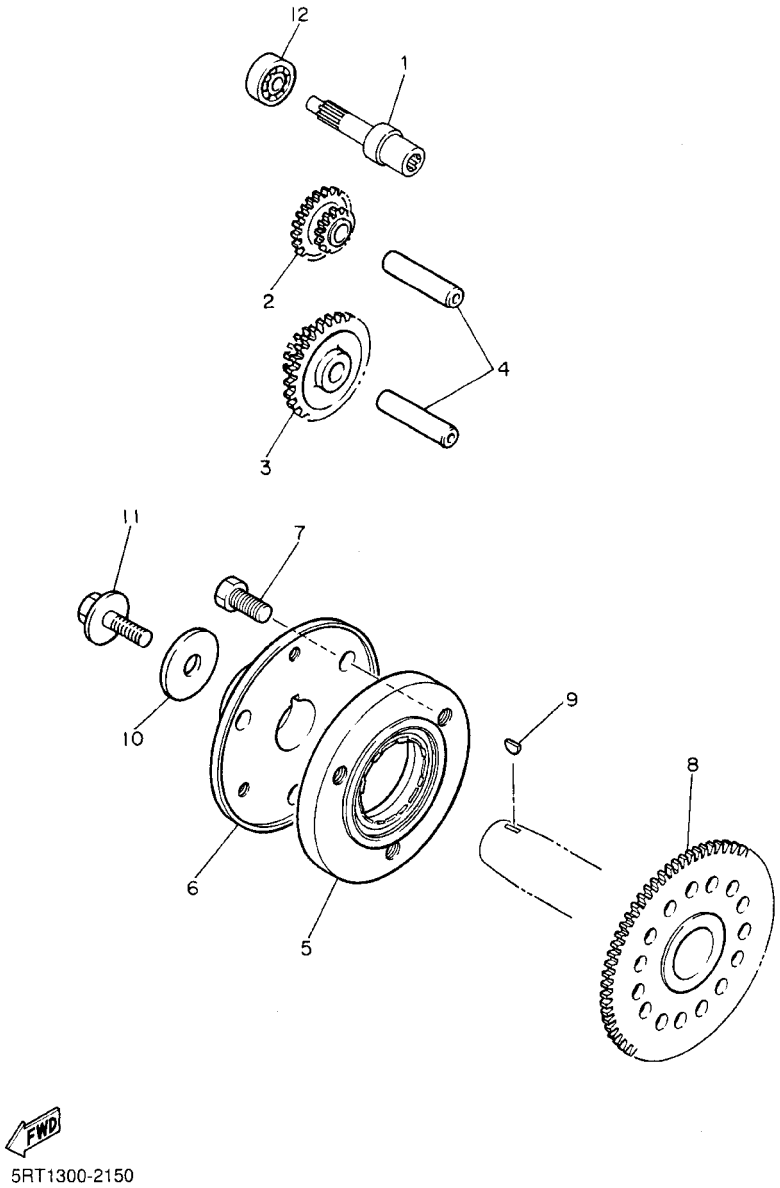

FIG. 15 EMBRAG. DEL ARRANQUE

REF. NO.	CODIGO NO.	DESCRIPCION	5RT1					OBSERVACION
1	5RT–15521–00	EJE 1	1					
2	3HE–15512–00	ENGRENAJE NEUTRO	1					
3	3HE–15517–00	ENGRENAJE POSICION 2DA	1					
4	3TJ–15521–00	EJE 1	2					
5	3HE–15590–02	ENSAMBLE GUIA CADENA ARRANQUE	1					
6	3HE–15524–00	RUEDA DE ARRANQUE	1					
7	91317–08020	PERNO	3					
8	4JH–15515–00	ENGRANAJE 3	1					
9	90280–05048	CUNA WOODRUFF	1					
10	90201–107K6	ARANDELA PLANA	1					
11	90105–10445	TORNILLO	1					
12	93306–20006	COJINETE (B6200)	1					NTN

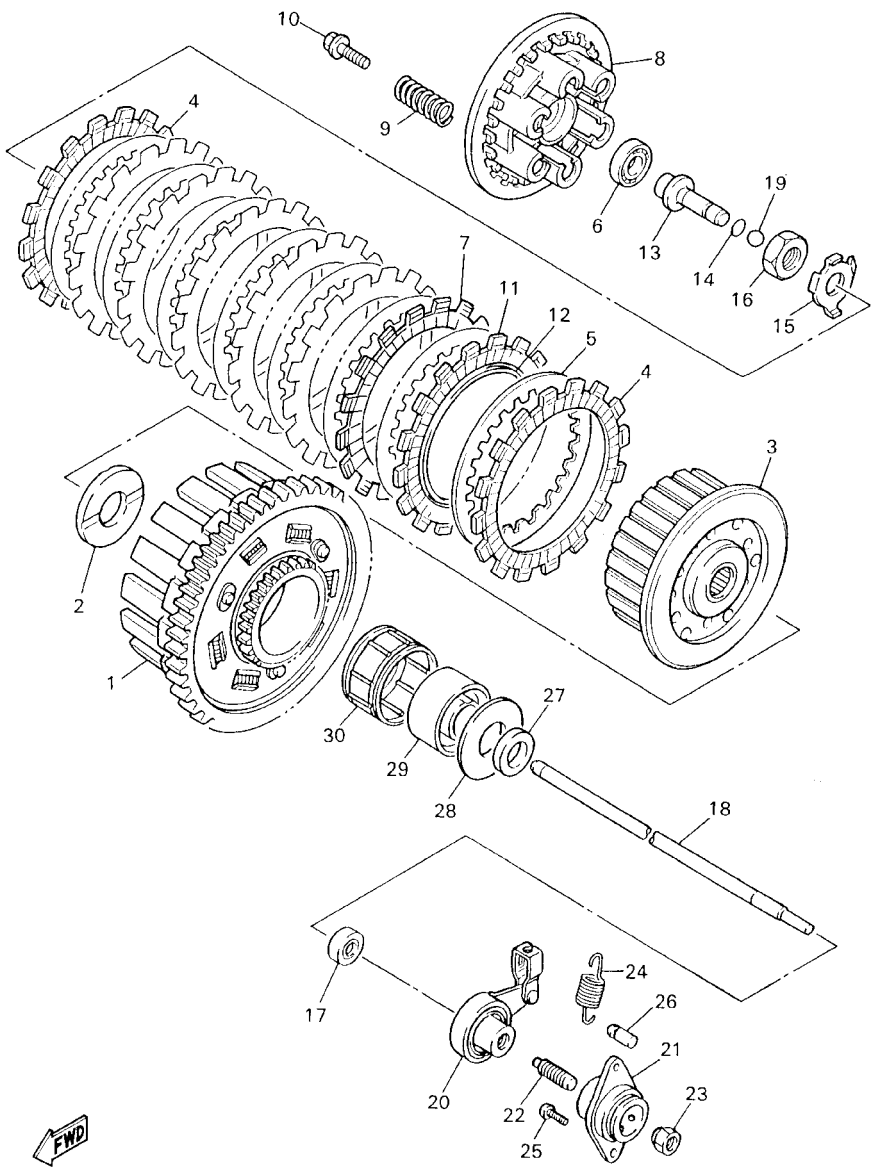

5DM7351-0160

FIG. 16 EMBRAGUE

REF. NO.	CODIGO NO.	DESCRIPCION	5RT1					OBSERVACION
1	4JH–16150–00	CAMPANA DE EMBRAGUE	1					
2	1WG–16154–00	ARANDELA, DE EMPUJE 1	1					
3	5DM–16371–10	CUBO, DE EMBRAGUE	1					
4	3JD–16321–00	PLACA DE FRICCION	2					
5	1LX–16324–00	PLACA DE EMBRAGUE	8					
6	93306–00105	COJINETE	1					
7	4JH–16321–00	PLACA DE FRICCION	6					
8	4JH–16351–00	PLATO DE PRESION	1					
9	90501–22001	RESORTE DE COMPRESION	6					
10	90159–06092	TORNILLO CON VALONA	6					
11	3JD–16331–00	DISCO, DE FRICCION	1					
12	3JD–16383–00	RESORTE DE COPA DE EMBRAGUE	1					
13	4JH–16356–00	VARILLA DE EMPUJE 1	1					
14	93210–48364	ANILLO O	1					
15	90215–18225	ARANDELA DE CIERRE	1					
16	90170–18221	TUERCA	1					
17	93109–08058	SELLO ACEITE (SD07 8–21–5.5 HS)	1					
18	4JH–16357–00	VARILLA DE EMPUJE 2	1					
19	93505–16006	BOLA	1					
20	4JH–16340–00	PALANCA DE EMPUJE COMPLETA	1					
21	1WG–16304–00	CAJA DE TORNILLO A BOLA COMPL.	1					
22	90113–08021	PERNO JUEGO	1					
23	90179–08179	TUERCA	1					
24	90506–11488	RESORTE DE TENSION	1					
25	90157–05065	TORNILLO CABEZA CONICA PLANA	2					
26	132–16346–00	GANCHO DE RESORTE	1					
27	90387–212R3	COLLAR	1					

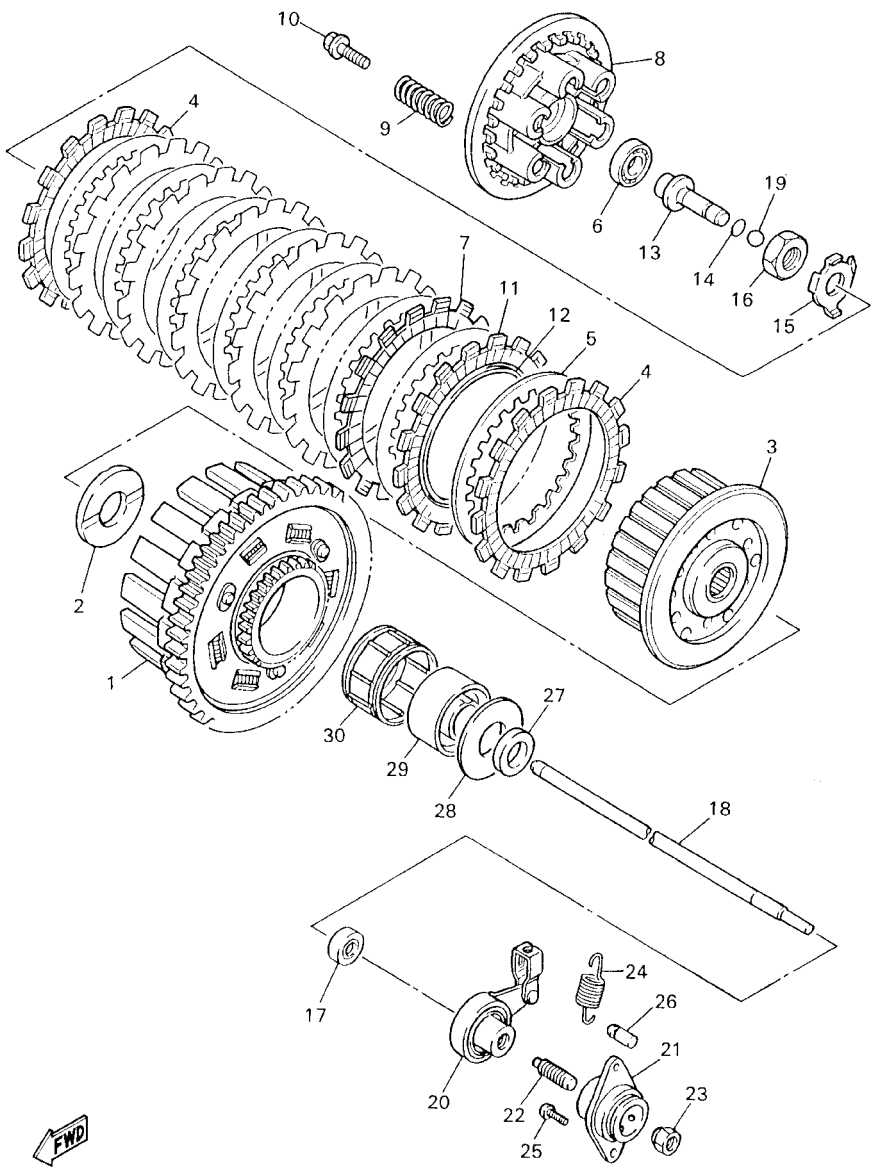

5DM7351-0160

FIG. 16 EMBRAGUE

REF. NO.	CODIGO NO.	DESCRIPCION	5RT1					OBSERVACION
28	1WG–16164–00	PLACA DE EMPUJE 2	1					
29	1WG–16181–00	SEPARADOR	1					
30	93310–345R8	COJINETE	1					

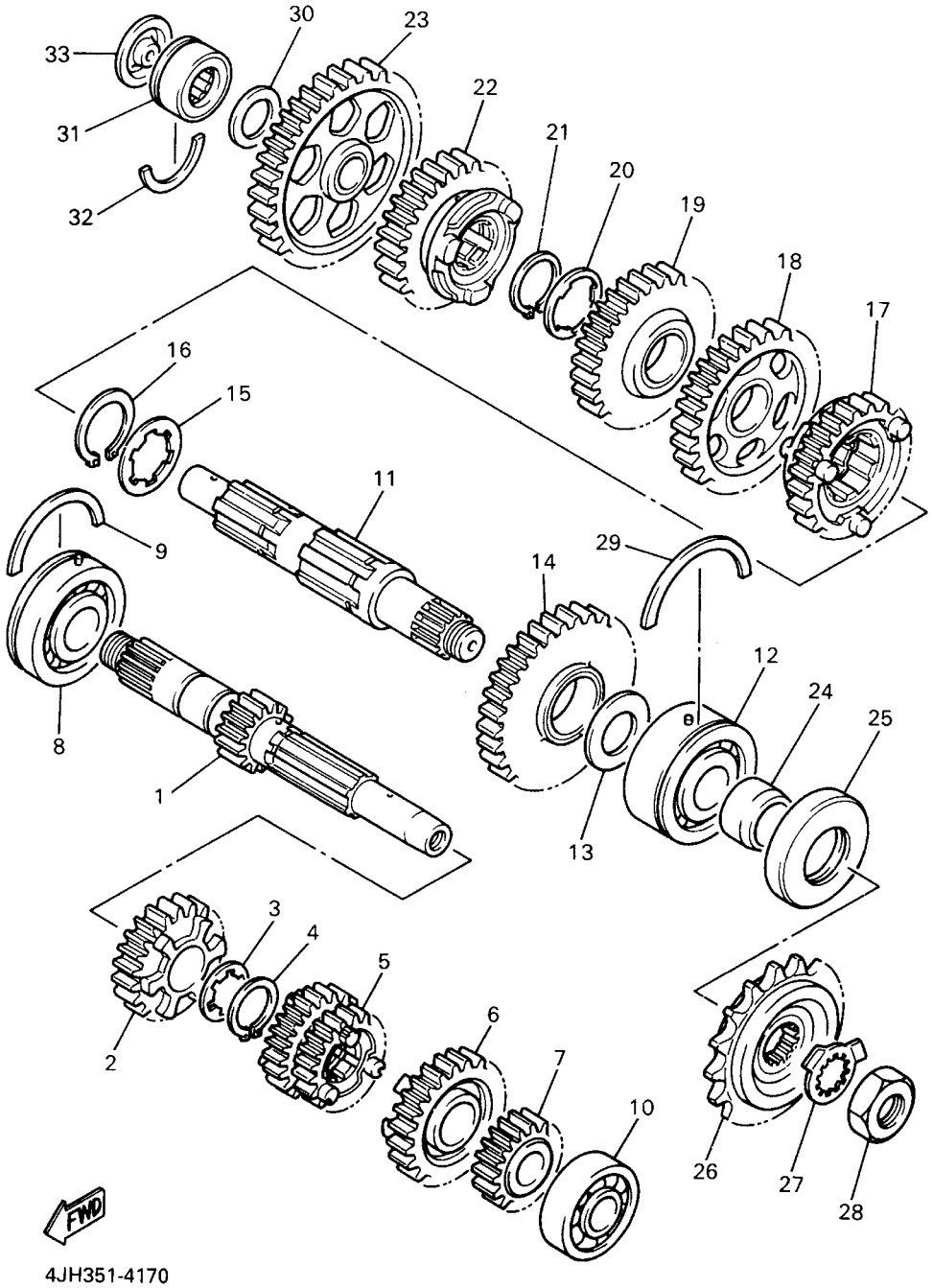

FIG. 17 TRANSMISION

REF. NO.	CODIGO NO.	DESCRIPCION	5RT1					OBSERVACION
1	4JH–17411–00	EJE, PRINCIPAL (13T)	1					
2	4TV–17151–00	ENGRANAJE PINON DE 5TA (21T)	1					
3	90209–22191	ARANDELA DE SEPARACION	1					
4	93440–25084	BOLA	1					
5	4JH–17131–00	ENGRANAJE PINON DE 3RA/4TA(22T/21T)	1					
6	4TV–17161–00	ENGRANAJE PINON 6TA (27T)	1					
7	4TV–17121–00	ENGRANAJE DE PINON DE 2DA (19T)	1					
8	93306–37208	COJINETE	1					
9	93440–54152	BOLA	1					
10	93306–20464	COJINETE	1					
11	4TV–17421–00	EJE SECUNDARIO	1					
12	93305–20509	COJINETE	1					
13	4TV–17417–00	ARANDELA DE REGLAJE	1					
14	4JH–17221–00	ENGRANAJE RUEDA DE 2DA (37T)	1					
15	90209–27336	ARANDELA DE SEPARACION	1					
16	93440–30077	BOLA	1					
17	4TV–17261–00	ENGRANAJE RUEDA DE 6TA (29T)	1					
18	4JH–17231–00	ENGRANAJE RUEDA DE 3RA (34T)	1					
19	4JH–17241–00	ENGRANAJE DE RUEDA 4TA (28T)	1					
20	90209–22191	ARANDELA DE SEPARACION	1					
21	93440–25084	BOLA	1					
22	4TV–17251–00	ENGRANAJE RUEDA DE 5TA (25T)	1					
23	4JH–17211–00	ENGRANAJE RUEDA DE 1 RA (37T)	1					
24	90387–2504A	COLLAR	1					
25	93102–35368	SELLO ACEITE	1					
26	4TV–17460–00	RUEDA DENTADA, TRACC (15T)	1					
27	90215–21022	ARANDELA DE CIERRE	1					

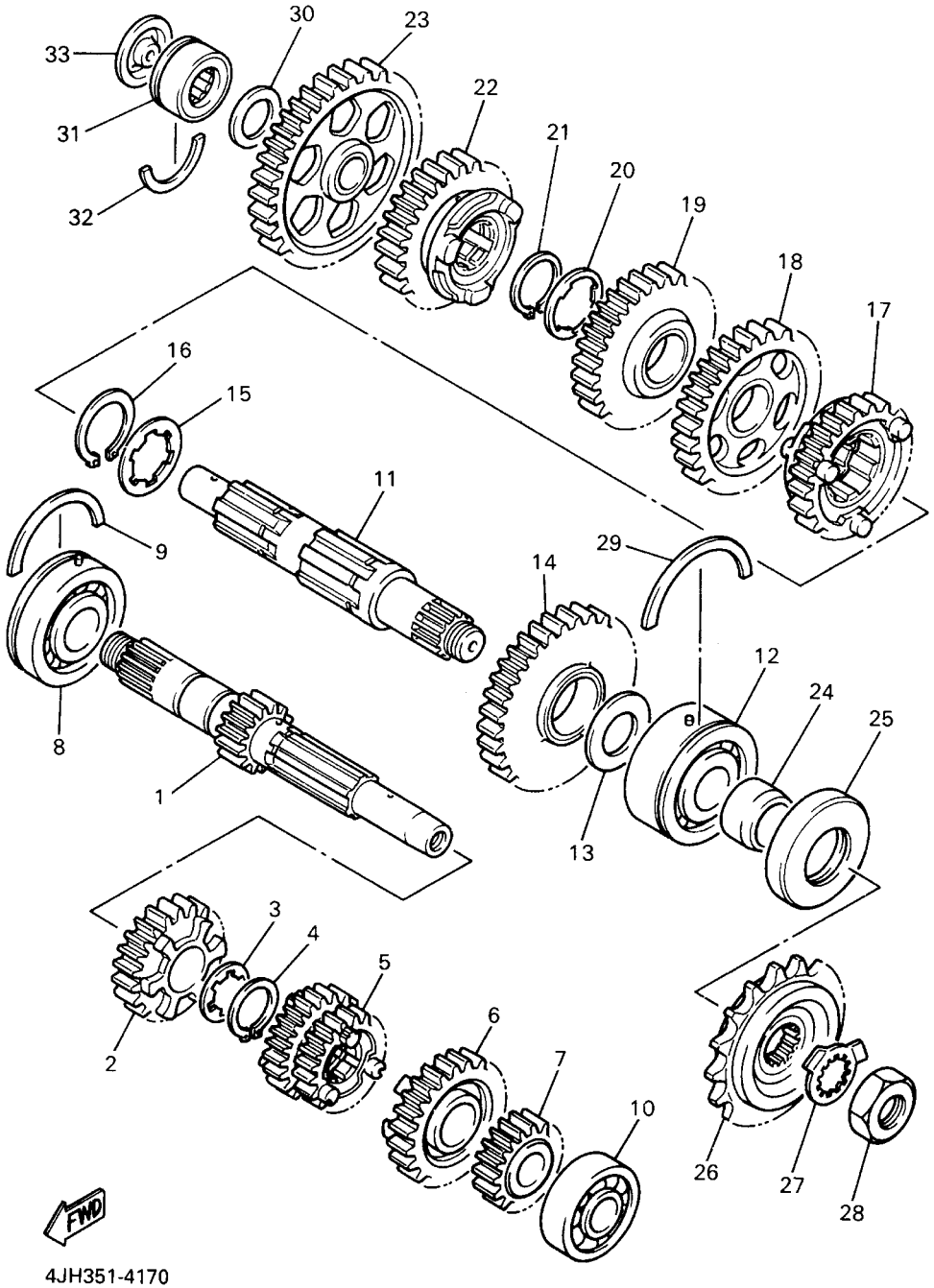

FIG. 17 TRANSMISION

REF. NO.	CODIGO NO.	DESCRIPCION	5RT1					OBSERVACION
28	90179–18020	TUERCA	1					
29	93440–52014	BOLA	1					
30	90201–20276	ARANDELA, PLACA(1.0T)	1					
31	93311–42045	COJINETE (20NG3315NE)	1					
32	278–17425–00	PRESILLA REDONDA 2	1					
33	4G0–17433–01	BOQUILLA	1					

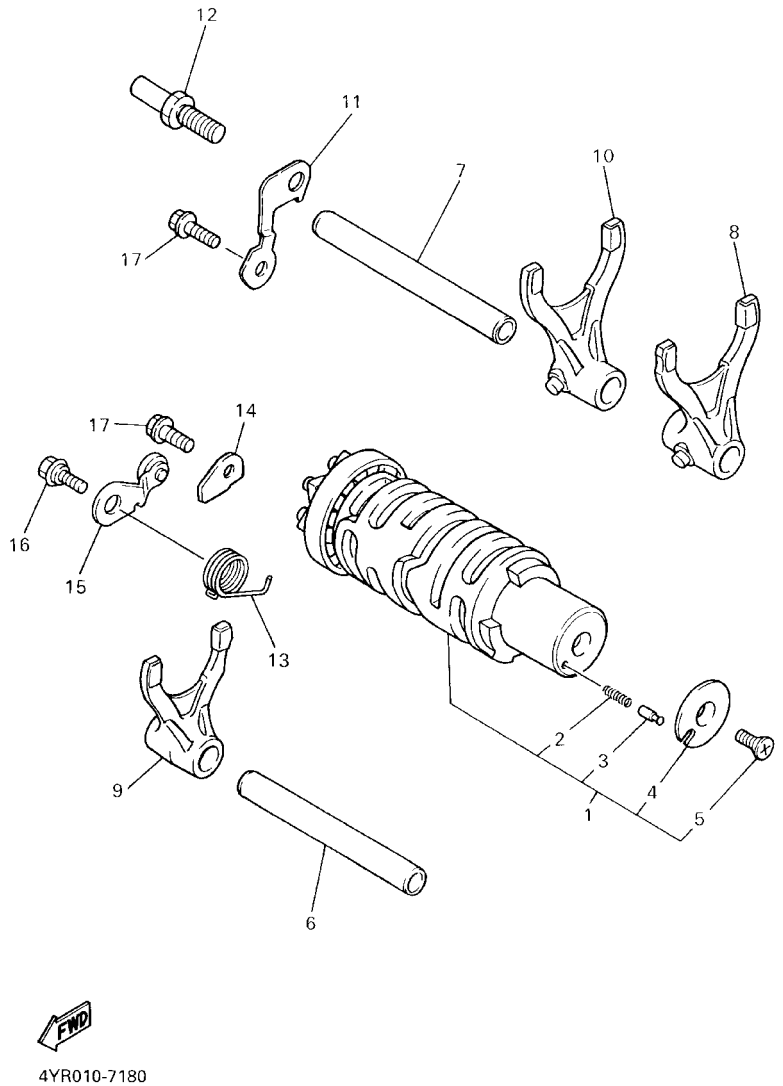

FIG. 18 LEVA DE CAMBIO. HORQ

REF. NO.	CODIGO NO.	DESCRIPCION	5RT1					OBSERVACION
1	5RT–18540–00	LEVADEL CAMBIO COMPLETA	1					
2	90501–06022	.RESORTE DE COMPRESION	1					
3	4UN–18542–00	.PUNTO MVERTO	1					
4	4UN–18566–00	.PLACA LATERAL 2	1					
5	90149–05321	.TORNILLO DE REGLAJE	1					
6	4JH–18531–01	BARRA GUIA HORQ. CAMBIO 1	1					
7	4JH–18535–00	BARRA GUIA HORQ.CAMBIO 2	1					
8	4JH–18511–00	HORQUILLA DEL CAMBIO 1	1					
9	4JH–18512–00	HORQUILLA DEL CAMBIO 2	1					
10	4JH–18513–00	HORQUILLA DE CAMBIO 3	1					
11	1WG–18536–00	TOPE DE PALANCA SELECTOR	1					
12	1HX–18127–00	PASADOR DE PALANCA	1					
13	90508–23007	RESORTE DE TORSION	1					
14	1WG–18562–00	PLACA DE TOPE 2	1					
15	5RT–18140–00	PALANCA DE TOPE COMPLETA	1					
16	90109–063F7	PERNO	1					
17	95827–06016	TUERCA DE REBORDE	2					

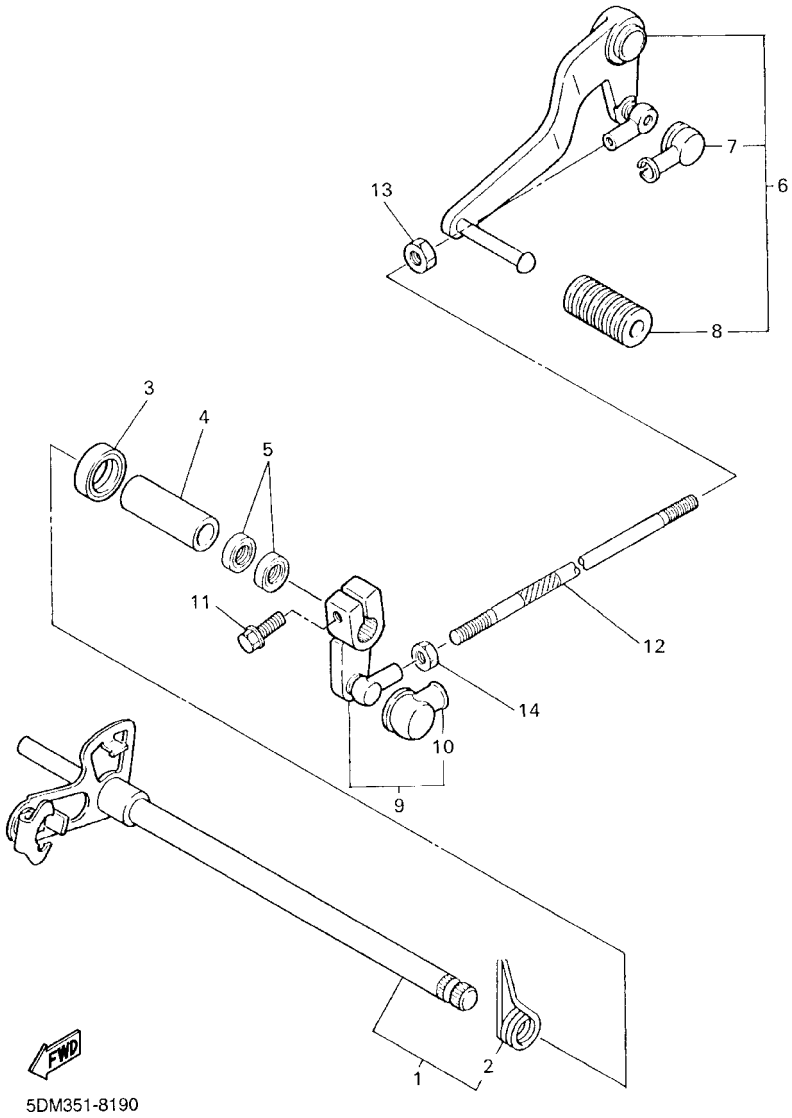

FIG. 19 EJE DE CAMBIO. PEDAL

REF. NO.	CODIGO NO.	DESCRIPCION	5RT1					OBSERVACION
1	5DM–18101–00	EJE SELECTOR COMPLETO	1					
2	90508–32007	.RESORTE DE TORSION	1					
3	93102–12106	SELLO ACEITE (SD 12–22–5 HS)	1					
4	90560–12211	SEPARADOR	1					
5	93109–12075	SELLO ACEITE	2					
6	1WG–18110–01	PEDAL DE CAMBIO COMPLETO	1					
7	2H9–18154–00	.CUBIERTA GUARDAPOLVO	1					
8	5EB–18113–00	.FUNDA DEL PEDAL DEL CAMBIO	1					
9	3LN–18130–00	EJE DE CAMBIO COMPLETO	1					
10	2H9–18154–00	.CUBIERTA GUARDAPOLVO	1					
11	97024–06020	PERNO	1					
12	2GV–18115–00	VARILLA DEL CANBIO	1					
13	90170–06228	TUERCA	1					
14	95304–06700	TUERCA	1					

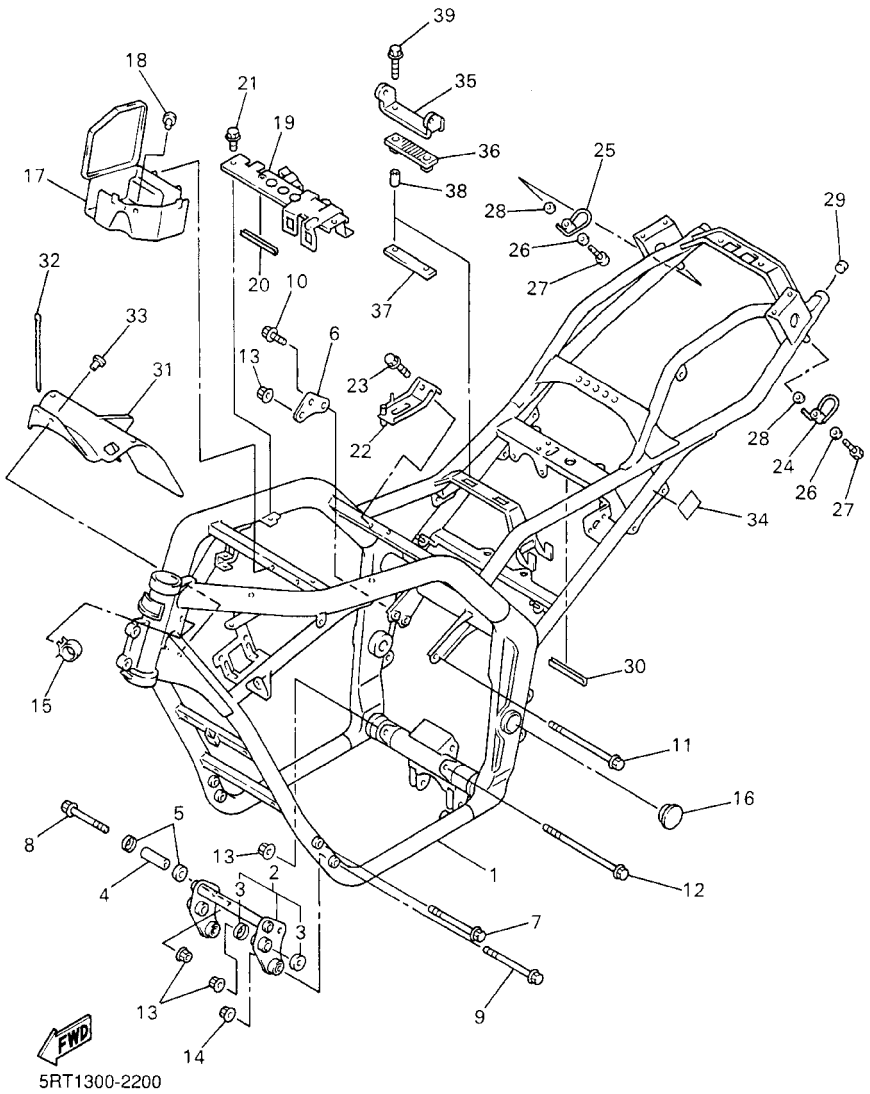

FIG. 20 CUADRO

REF. NO.	CODIGO NO.	DESCRIPCION	5RT1					OBSERVACION
1	5RT–21110–00	ARMAZON COMPLETO	1					
2	5DM–21400–00	SOPORTE DE MOTOR COMPLETO	1					
3	4SE–22129–00	.TAPA DE EMPUJE 2	4					
4	90387–1013M	COLLAR	2					
5	22W–22129–00	TAPA DE EMPUJE 2	4					
6	4HM–21318–00	SOPORTE DE MOTOR 5	1					
7	95814–10090	TUERCA DE REBORDE	2					
8	95814–10080	TUERCA DE REBORDE	2					
9	90105–085A5	TORNILLO	2					
10	95817–08014	TUERCA DE REBORDE	2					
11	90105–10731	TORNILLO	1					
12	95817–10170	TUERCA DE REBORDE	1					
13	95707–10500	TUERCA DE BRIDA	6					
14	95707–08500	TUERCA DE BRIDA	2					
15	90464–30252	BRIDA	2					
16	3SX–2135F–00	CUBIERTA	2					
17	4YR–21245–00	CAJA	1					
18	90269–07076	REMACHE	1					
19	5DM–24216–01	SOPORTE	1					
20	31A–24188–01	MOLDURA DEPOSITO COMBUST.	1					
21	95807–06010	TUERCA DE REBORDE	2					
22	5DM–21147–01	SOPORTE	1					
23	95027–06012	PERNO, DE BRIDA	1					
24	4SV–21654–11	CABLE	1					
25	4SV–21654–01	CABLE	1					
26	90206–08051	ARANDELA ONDULADA	2					
27	90109–061F3	PERNO	2					

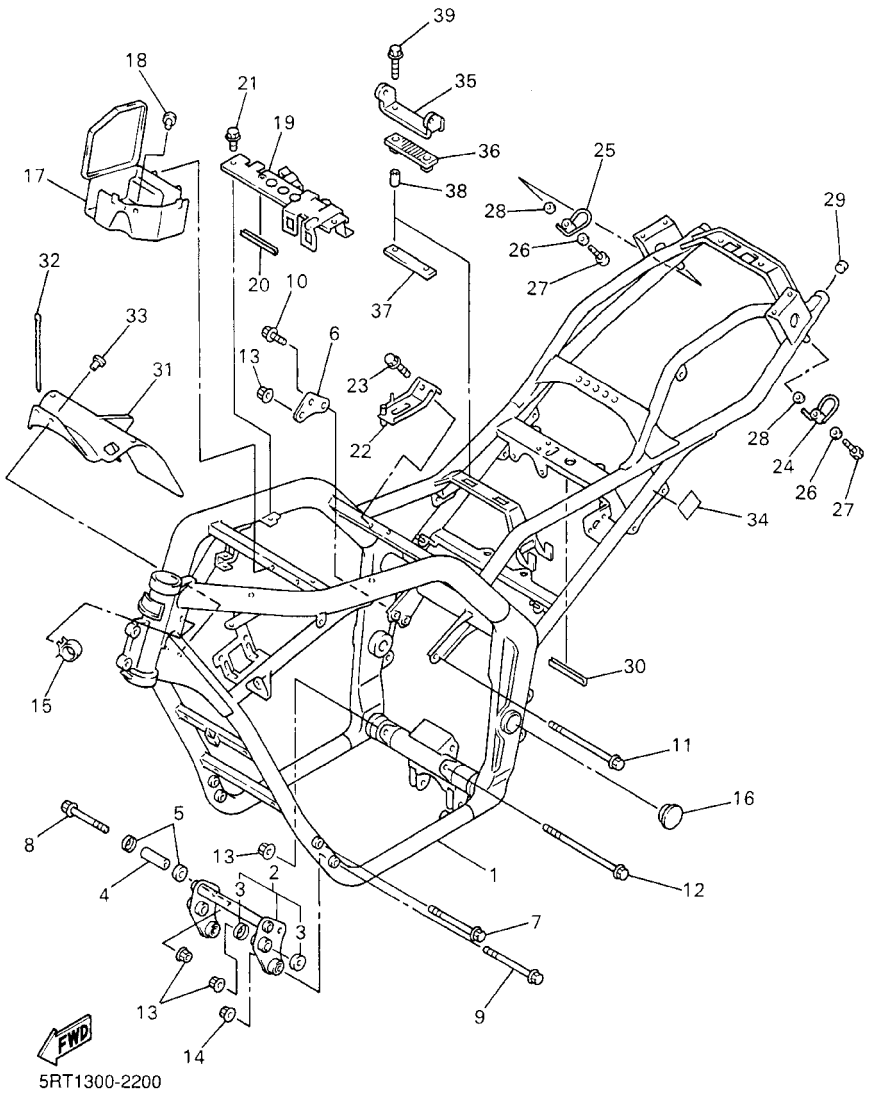

FIG. 20 CUADRO

REF. NO.	CODIGO NO.	DESCRIPCION	5RT1					OBSERVACION
28	90201–06043	ARANDELA PLANA	2					
29	3YJ–24481–00	TAPON	2					
30	31A–24188–01	MOLDURA DEPOSITO COMBUST.	1					
31	4YR–2137Y–01	GUIA DE AIRE	1					
32	90464–13073	BRIDA	2					
33	90269–06063	REMACHE	2					
34	3FY–21575–01	SELLO 1	2					
35	5DM–21346–00	SOPORTE, ACCESORIO DE DEPOSITO	1					
36	5DM–24181–00	AMORTIGUADOR DE MONTAJE	1					
37	5DM–21296–00	TUERCA	1					
38	90387–06299	COLLAR	2					
39	95027–06025	PERNO, DE BRIDA	2					

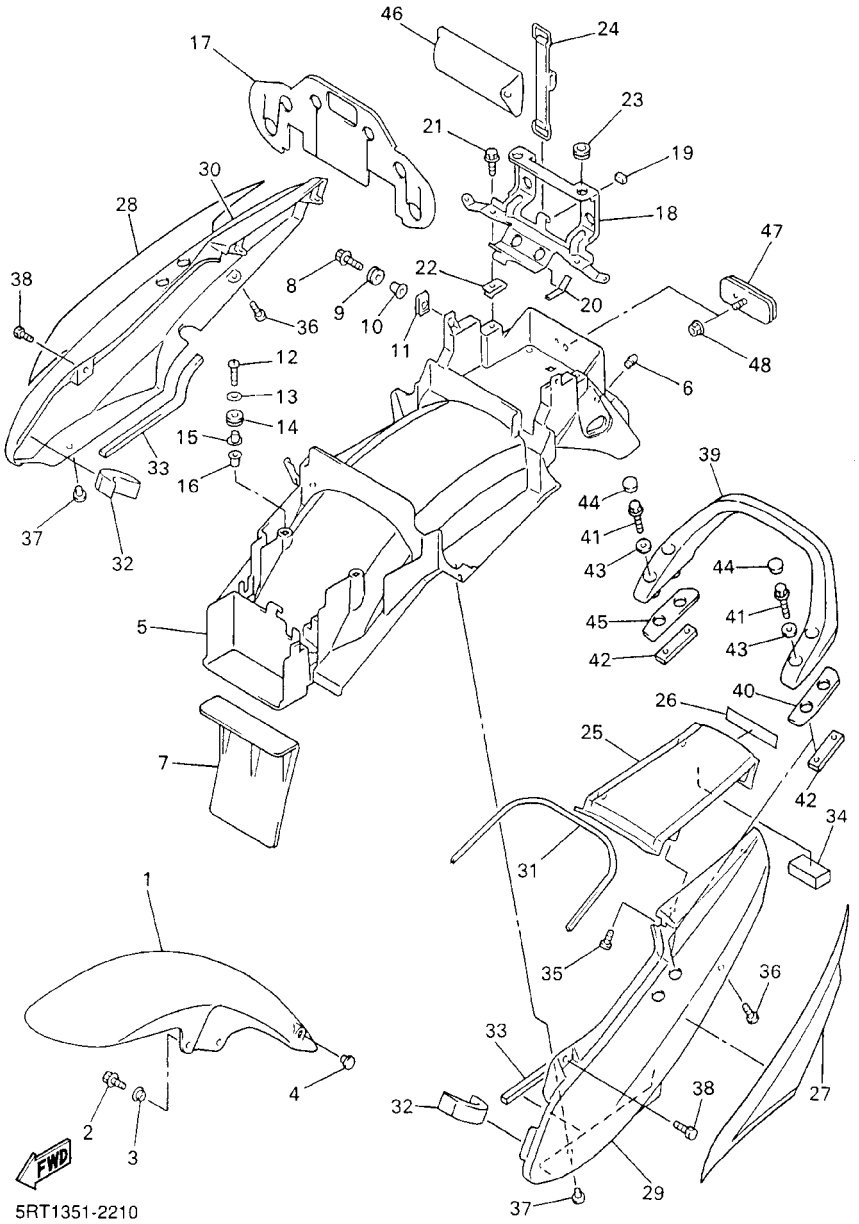

FIG. 21 GUARDABARRO

REF. NO.	CODIGO NO.	DESCRIPCION	5RT1					OBSERVACION
1	3MA–21511–21–PC	GUARDABARRO DELANTERO	1					UR DPBMC
	3MA–21511–21–PF	GUARDABARRO DELANTERO	1					UR S1
	3MA–21511–21–4B	GUARDABARRO DELANTERO	1					UR BL2 PARA RYC1
2	90119–06044	TORNILLO CON ARANDELA	4					
3	90387–06681	COLLAR	4					
4	90338–12192	TAPON	1					
5	4YR–21611–01	GUARDABARRO TRASERO	1					
6	4G0–21639–00	AMORTIGUADOR 2	1					
7	5DM–21621–00	CHARNELA	1					
8	90119–06097	TORNILLO CON ARANDELA	2					
9	90480–16616	TAPON	2					
10	90387–065J6	COLLAR	2					
11	90183–06023	TUERCA DE RESORTE	2					
12	97707–60025	TORNILLO ROSCA HEMBRA	2					
13	90201–06557	ARANDELA PLANA	2					
14	90480–14052	TAPON	2					
15	90387–065J6	COLLAR	2					
16	90338–08226	TAPON	2					
17	4YR–21691–10	CHARNELA	1					
18	4YR–2117E–00	SOPORTE DE LANTERNA TRAZERA	1					
19	1HX–28227–00	AMORTIGUADRO 2	1					
20	5H0–8235Y–M0	AMORTIGUADOR	1					
21	95807–06012	TUERCA DE REBORDE	2					
22	90183–06023	TUERCA DE RESORTE	2					
23	90480–14323	TAPON	2					
24	26L–82131–00	TIRANTE DE BATERIA	1					
25	4YR–21651–00–P6	TAPA DE GUARDABARRO TRAS.	1					UR DPBMC

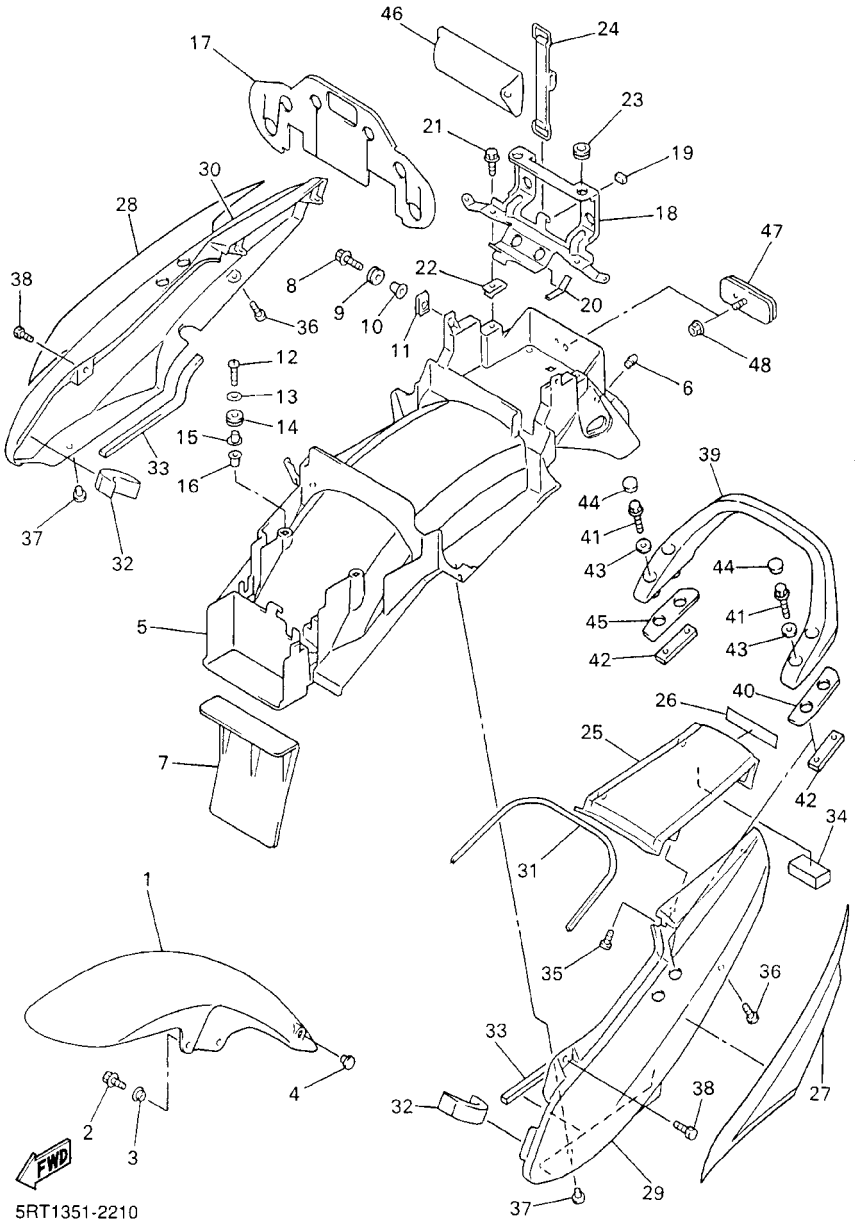

FIG. 21 GUARDABARRO

REF. NO.	CODIGO NO.	DESCRIPCION	5RT1					OBSERVACION
25	4YR–21651–00–P7	TAPA DE GUARDABARRO TRAS.	1					UR S1
	4YR–21651–00–4B	TAPA DE GUARDABARRO TRAS.	1					UR BL2 PARA RYC1
26	99241–00100	EMBLEMA, YAMAHA	1					UR PARA DPBMC
	99244–00100	EMBLEMA, YAMAHA	1					UR PARA S1
	99246–00100	EMBLEMA, YAMAHA	1					UR PARA RYC1
27	5RT–2173E–00	GRAFICO	1					UR PARA DPBMC
	5RT–2173E–10	GRAFICO	1					UR PARA S1
	5RT–2173E–20	GRAFICO	1					UR PARA RYC1
28	5RT–2173F–00	GRAFICO	1					UR PARA DPBMC
	5RT–2173F–10	GRAFICO	1					UR PARA S1
	5RT–2173F–20	GRAFICO	1					UR PARA RYC1
29	5DM–2163A–10–P4	CUBIERTA TRAS GUARDABARRO 1	1					UR DPBMC
	5DM–2163A–10–P5	CUBIERTA TRAS GUARDABARRO 1	1					UR S1
	5DM–2163A–10–4B	CUBIERTA TRAS GUARDABARRO 1	1					UR BL2 PARA RYC1
30	5DM–2163E–10–P4	CUBIERTA TRAS GUARDABARRO 2	1					UR DPBMC
	5DM–2163E–10–P5	CUBIERTA TRAS GUARDABARRO 2	1					UR S1
	5DM–2163E–10–4B	CUBIERTA TRAS GUARDABARRO 2	1					UR BL2 PARA RYC1
31	42N–28376–00	ADORNO	1					
32	4YR–21639–00	AMORTIGUADOR 2	2					
33	4BP–24737–00	AMORTIGUADOR DE ASIENTO	2					
34	5RT–2472F–00	SOPORTE	1					
35	97707–50012	TORNILLO ROSCA HEMBRA	4					
36	90154–05059	TORNILLO DE LIGAR	2					
37	90269–07076	REMACHE	2					
38	90109–063F1	PERNO	2					
39	5DM–24773–10–P3	MANIJA DE ASIENTO	1					UR DPBMC
	5DM–24773–10–P4	MANIJA DE ASIENTO	1					UR S1

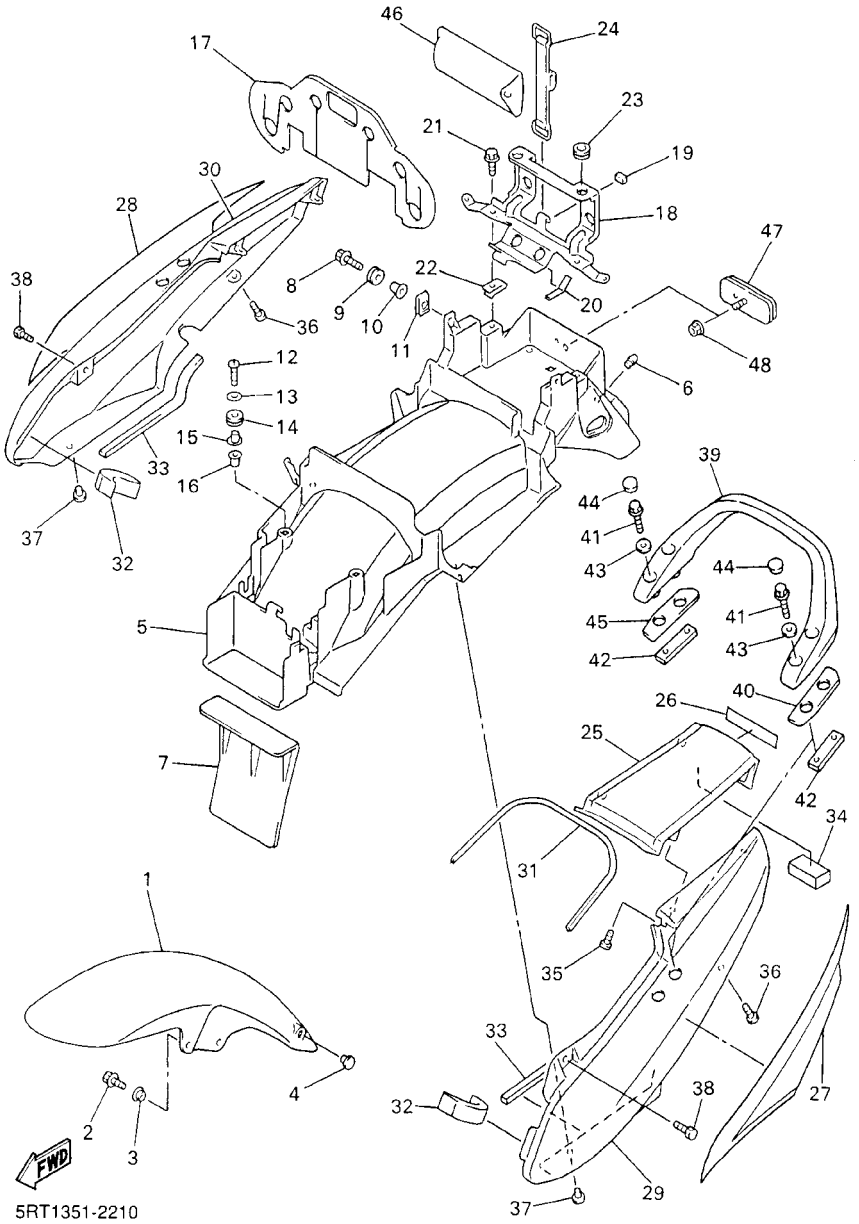

FIG. 21 GUARDABARRO

REF. NO.	CODIGO NO.	DESCRIPCION	5RT1					OBSERVACION
39	5DM–24773–10–4B	MANIJA DE ASIENTO	1					UR BL2 PARA RYC1
40	5DM–24732–00	PLACA	1					
41	90105–08016	TORNILLO CON ARANDELA	4					
42	5RT–21295–00	TUERCA	2					
43	90201–094G1	ARANDELA PLANA	4					
44	5DM–2143A–00	TAPA	4					
45	5DM–24732–10	PLACA	1					
46	4YR–28100–00	JUEGO DE HERRAMIENTAS	1					
47	3Y6–85130–02	REFLECTOR TRASERO COMPLETO	1					
48	95707–05500	TUERCA DE BRIDA	1					

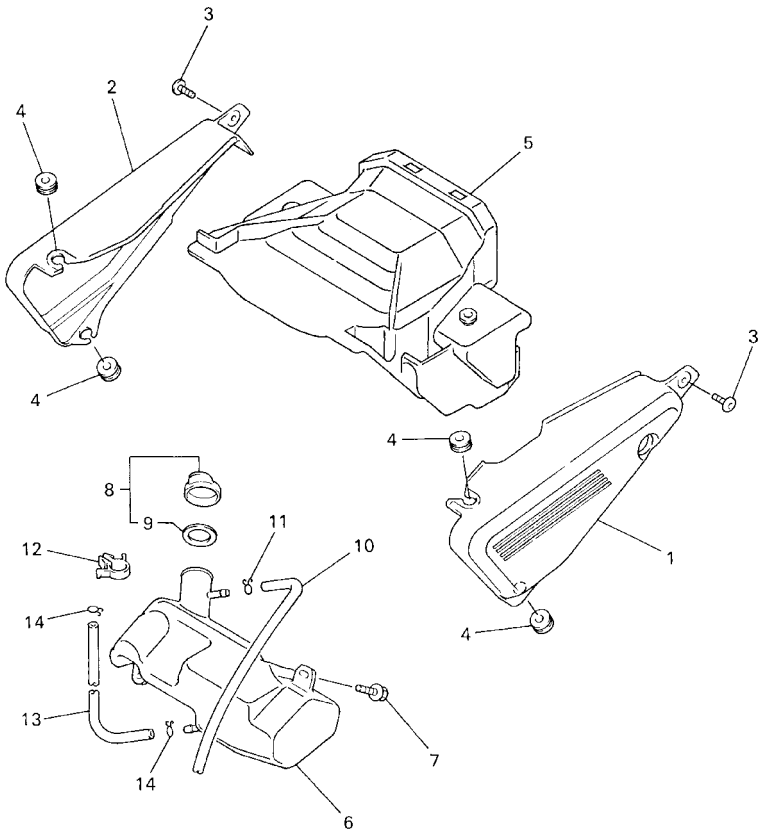

5DM351-8220

FIG. 22 CUBIERTA LATERAL

REF. NO.	CODIGO NO.	DESCRIPCION	5RT1					OBSERVACION
1	4YR–21711–00	JUEGO DE GRAFICOS	1					
2	4YR–21721–00	JUEGO DE GRAFICOS	1					
3	90149–06298	TORNILLO DE REGLAJE	2					
4	90480–12320	TAPON	2					
5	5DM–2172W–00	CUBIERTA	1					
6	4YR–21871–00	TANQUE DE RECUPERACION	1					
7	90119–06074	TORNILLO CON ARANDELA	2					
8	1AA–21815–00	TAPON	1					
9	1AA–21874–00	.CUNA	1					
10	90445–09353	TUBO (L520)	1					
11	90467–08003	PRESILLA	1					
12	90464–15157	BRIDA	1					
13	90445–081K8	TUBO (L780)	1					
14	90467–08075	PRESILLA	2					

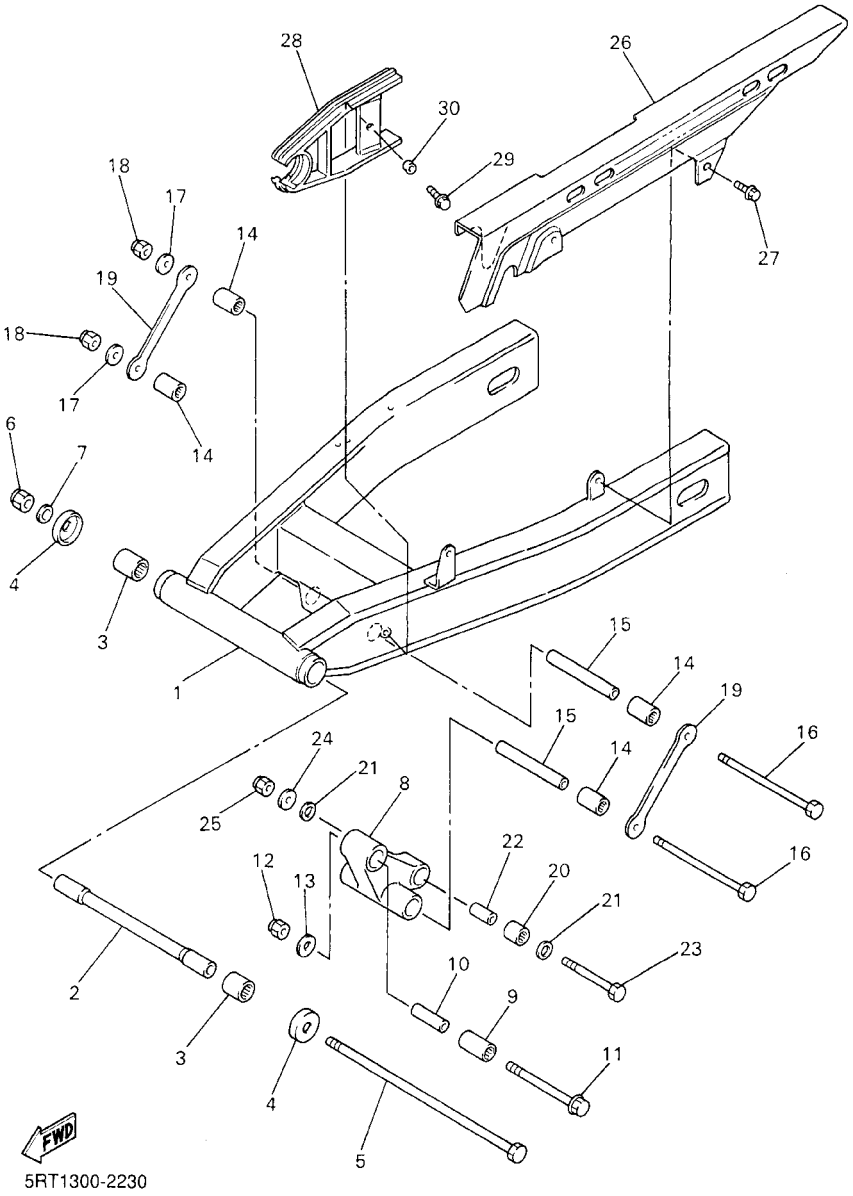

FIG. 23 BRAZO TRASERO

REF. NO.	CODIGO NO.	DESCRIPCION	5RT1					OBSERVACION
1	5RT–22110–00	BRAZO TRASERO COMPLETO	1					
2	5RT–22184–00	BUJE	1					
3	93320–32403	COJINETE	2					
4	47X–22129–00	TAPA DE EMPUJE 2	2					
5	4YR–22141–00	EJE DEL BARCULANTE	1					
6	90185–16127	TUERCA AUTOBLOCANTE	1					
7	90201–160F6	ARANDELA PLANA	1					
8	4KM–2217A–00	BRAZO REEURIO	1					
9	93317–42060	COJINETE	1					
10	90387–100T8	COLLAR	1					
11	90105–10727	TORNILLO	1					
12	95617–10100	PERNO DE PUNTAL	1					
13	90201–101J1	ARANDELA PLANA	1					
14	93317–41761	COJINETE	4					
15	90387–126T1	COLLAR	2					
16	90101–12673	TORNILLO	2					
17	90201–126A7	ARANDELA PLANA	2					
18	95617–12100	PERNO DE PUNTAL	2					
19	2KT–2217M–00	BRAZO 1	2					
20	93317–31771	COJINETE	1					
21	93109–17071	SELLO ACEITE	2					
22	90387–127W0	COLLAR	1					
23	90101–10659	TORNILLO	1					
24	90201–101J1	ARANDELA PLANA	1					
25	95617–10100	PERNO DE PUNTAL	1					
26	5LV–22311–00	CABRECADENA	1					
27	90119–06117	TORNILLO CON ARANDELA	3					

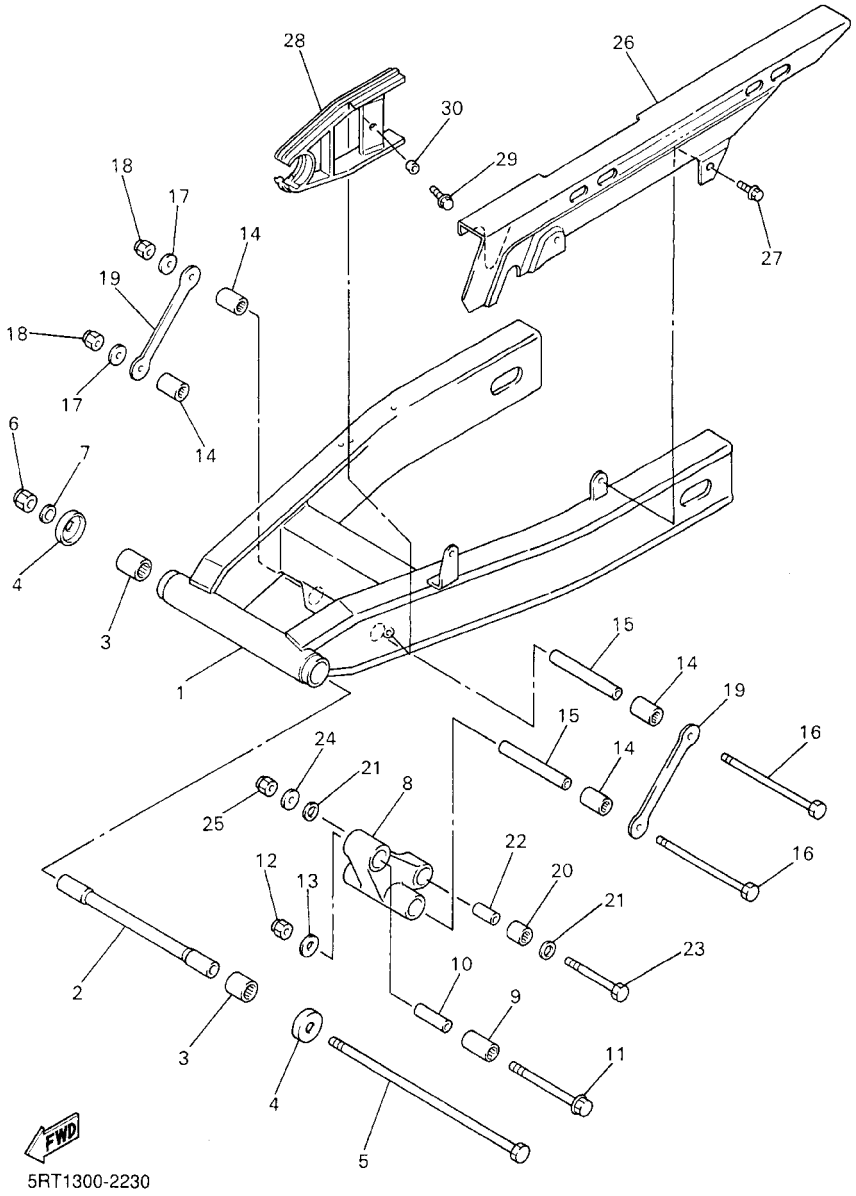

FIG. 23 BRAZO TRASERO

REF. NO.	CODIGO NO.	DESCRIPCION	5RT1					OBSERVACION
28	4YR–22151–00	SELLO DE GUARDA	1					
29	90119–06118	TORNILLO CON ARANDELA	1					
30	90387–06022	COLLAR	1					

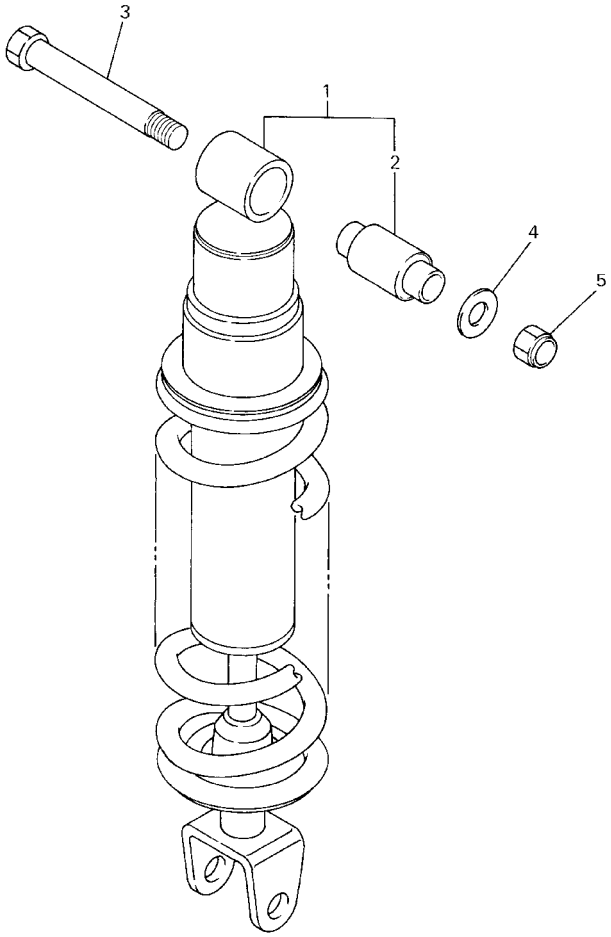

4YR010-7240

FIG. 24 SUSPENSION TRASERO

REF. NO.	CODIGO NO.	DESCRIPCION	5RT1					OBSERVACION
1	5DM–22210–00	AMORTIGUADOR TRASERO COMPLETO	1					
2	2YK–22216–00	.BUJE DEL AMORTIGUADOR TRASERO	1					
3	90109–10554	PERNO	1					
4	90201–101J1	ARANDELA PLANA	1					
5	95607–10100	TUERCA AUTOBLOCANTE	1					

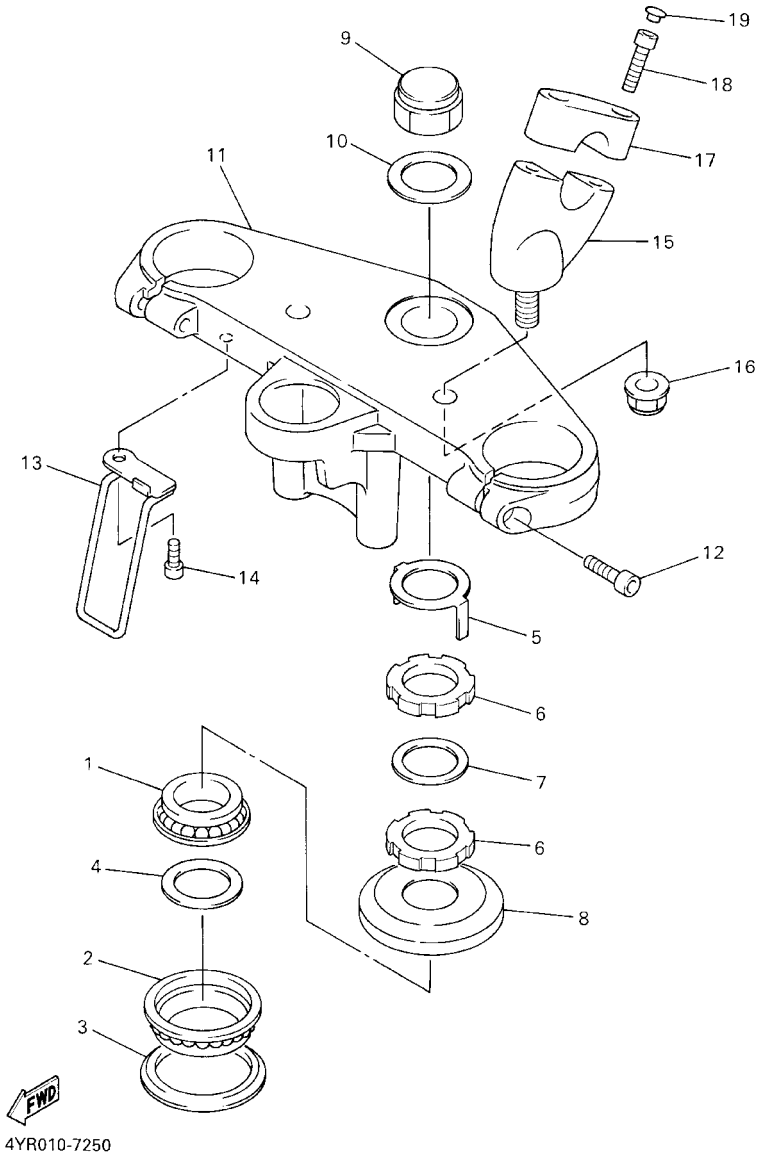

FIG. 25 DIRECCION

REF. NO.	CODIGO NO.	DESCRIPCION	5RT1					OBSERVACION
1	93399–99931	COJINETE	1					
2	93399–99932	COJINETE	1					
3	3FV–23462–00	RETEN DE DIRECCION	1					
4	90202–24190	ARANDELA DE PLANA	1					
5	26H–23418–01	ARANDELA ESPECIAL	1					
6	90179–25033	TUERCA	2					
7	90202–26142	ARANDELA DE PLANA	1					
8	1W1–23416–00	CUBIERTA DE BASE DE BOLA 2	1					
9	90176–22081	TUERCA CORONA	1					
10	90201–220T0	ARANDELA PLANA	1					
11	4YR–23435–10	PLATINA SUPERIOR	1					
12	91314–08030	PERNO	2					
13	5RT–23389–00	GUIA DE CABLE	1					
14	90110–06226	TORNILLO ALLEN	1					
15	4YR–23442–10	SOPORTE DE MANUBRIO INFERIOR	2					
16	95607–10200	TUERCA DE AUTO–CIERRE	2					
17	4H7–23441–00–98	SOPORTE DE MANUBRIO	2					LGB
18	91317–08030	PERNO	4					
19	341–23469–00	TAPA DE PERNO	4					

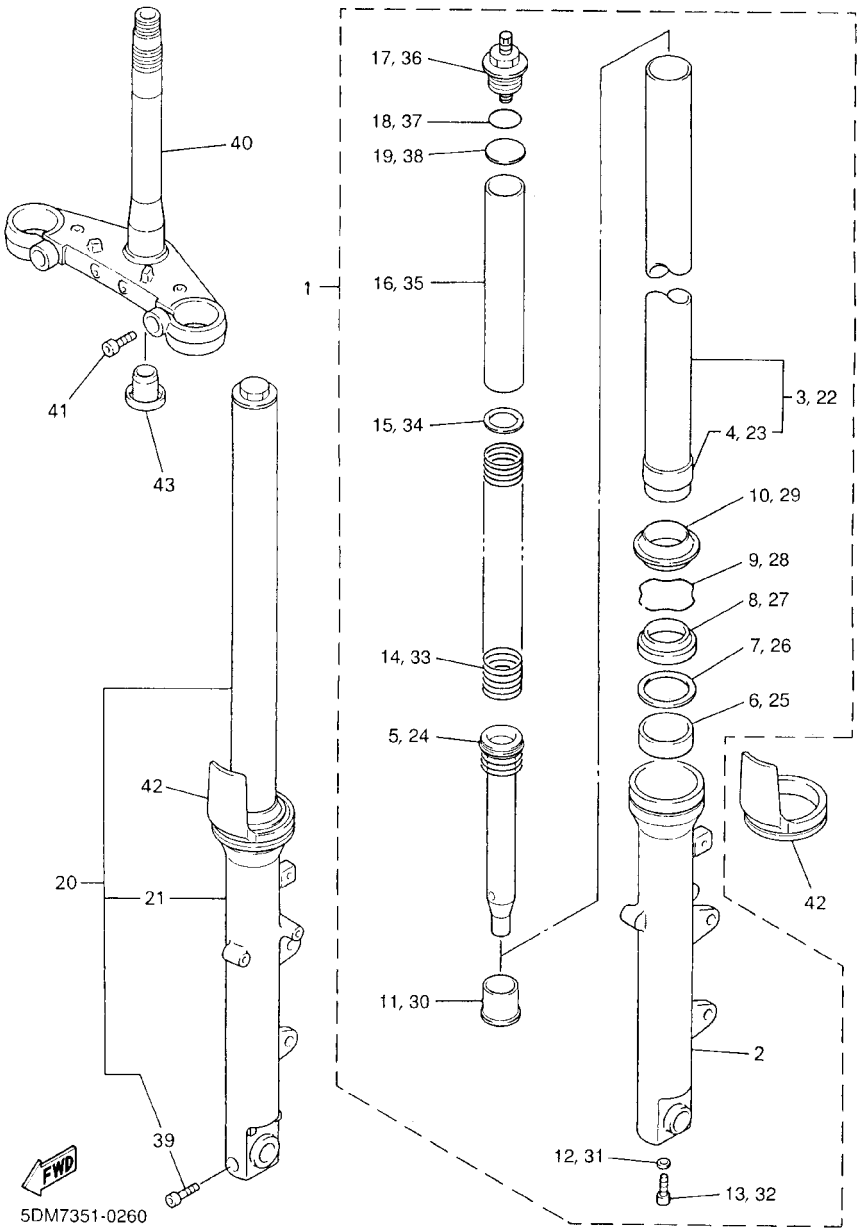

FIG. 26 HORQUILLA DELANTERA

REF. NO.	CODIGO NO.	DESCRIPCION	5RT1					OBSERVACION
1	5DM–23102–20	HORQUILLA DELANTERA COMPL.(MI)	1					
2	5DM–23126–20	.TUBO EXTERIOR 1	1					
3	4YR–23110–00	.TUBO INTERIOR COMPLETO 1	1					
4	4YR–23171–00	..PISTON HORQUILLA DELANT.	1					
5	5DM–23170–10	.CILINDRO COMPL DE HORQ DELAN	1					
6	4FM–23125–40	.METAL CORREDIZO 1	1					
7	36Y–23146–10	.ARANDELA DE SELLO DE ACEITE	1					
8	4EB–23145–00	.RETEN DE ACEITE	1					
9	26H–23156–00	.PRESILLA DEL RETEN DE ACEITE	1					
10	4EB–23144–00	.GUARDAPOLVO	1					
11	4YR–23173–00	.VASTAGO AHUSADO	1					
12	509–23158–L0	.EMPAQUE	1					
13	278–23181–50	.TORNILLO CABEZAHEXAGONAL	1					
14	5DM–23141–10	.RESORTE HORQUILLA DELANT.	1					
15	3EN–23149–50	.ARANDELA DE RESORTE SUPERIOR	1					
16	5EL–23118–00	.SEPARADOR	1					
17	4JH–23111–00	.TAPON	1					
18	43F–23188–10	.ANILLO O	1					
19	2GH–23149–00	.ARANDELA DE RESORTE SUPERIOR	1					
20	5DM–23103–20	HORQUILLA DELANTERA COMPL.(MD)	1					
21	5DM–23136–20	.TUBO EXTERIOR (DER.)	1					
22	4YR–23110–00	.TUBO INTERIOR COMPLETO 1	1					
23	4YR–23171–00	..PISTON HORQUILLA DELANT.	1					
24	5DM–23170–10	.CILINDRO COMPL DE HORQ DELAN	1					
25	4FM–23125–40	.METAL CORREDIZO 1	1					
26	36Y–23146–10	.ARANDELA DE SELLO DE ACEITE	1					
27	4EB–23145–00	.RETEN DE ACEITE	1					

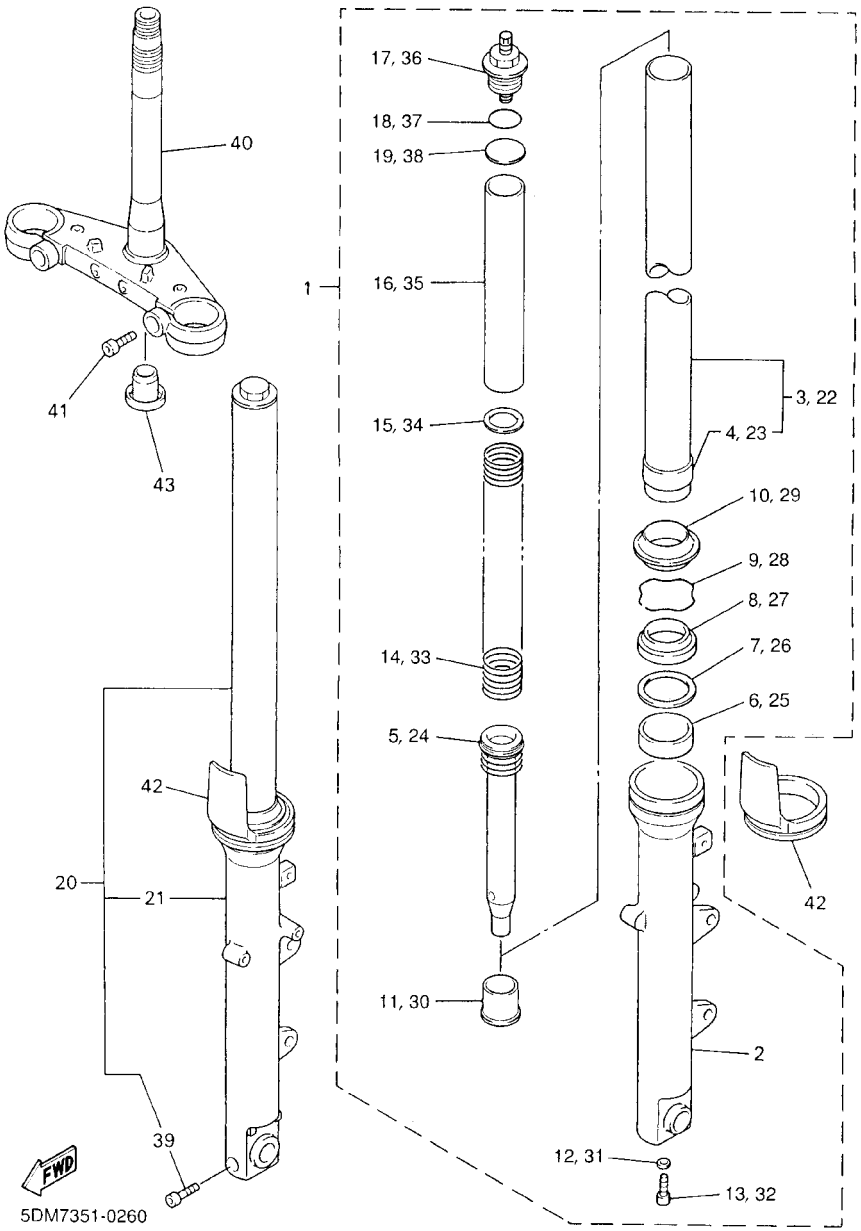

FIG. 26 HORQUILLA DELANTERA

REF. NO.	CODIGO NO.	DESCRIPCION	5RT1					OBSERVACION
28	26H–23156–00	.PRESILLA DEL RETEN DE ACEITE	1					
29	4EB–23144–00	.GUARDAPOLVO	1					
30	4YR–23173–00	.VASTAGO AHUSADO	1					
31	509–23158–L0	.EMPAQUE	1					
32	278–23181–50	.TORNILLO CABEZAHEXAGONAL	1					
33	5DM–23141–10	.RESORTE HORQUILLA DELANT.	1					
34	3EN–23149–50	.ARANDELA DE RESORTE SUPERIOR	1					
35	5EL–23118–00	.SEPARADOR	1					
36	4JH–23111–00	.TAPON	1					
37	43F–23188–10	.ANILLO O	1					
38	2GH–23149–00	.ARANDELA DE RESORTE SUPERIOR	1					
39	91314–08040	.PERNO	1					
40	5DM–23340–00	PLATINA INFERIOR COMPLETA	1					
41	91317–10025	PERNO	2					
42	4PU–2331G–00	CUBIERTA	2					
43	4KM–23123–01	CUBIERTA INFERIOR 1	1					

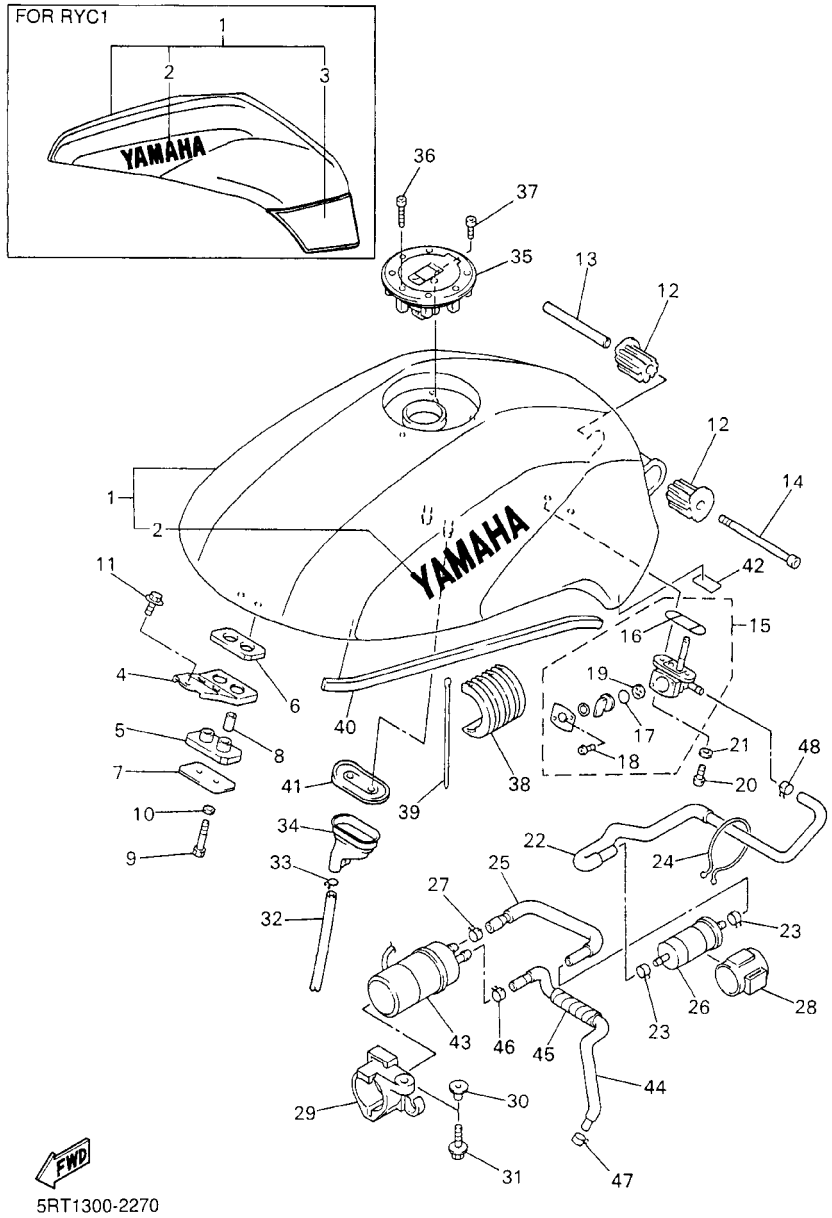

FIG. 27 DEPOSITO DE COMBUSTIBLE

REF. NO.	CODIGO NO.	DESCRIPCION	5RT1					OBSERVACION
1	5RT–Y2410–10–01	DEPOSITO DE COMBUSTIBLE COMP.	1					UR DPBMC
	5RT–Y2410–10–02	DEPOSITO DE COMBUSTIBLE COMP.	1					UR S1
	5RT–Y2410–10–03	DEPOSITO DE COMBUSTIBLE COMP.	1					UR RYC1
2	5DM–2153A–00	.EMBLEMA, YAMAHA	2					UR PARA DPBMC
	99224–00160	.EMBLEMA, YAMAHA	2					UR PARA S1,RYC1
3	5RT–24244–00	.CALCOMANIA DEPOSITO COMBUST.	1					PARA RYC1
4	5DM–24191–00	SOPORTE DEPOSITO DE COMBUST.1	1					
5	2GH–24181–00	AMORTIGUADOR DE MONTAJE	1					
6	2GH–24183–00	AMORTIGUADOR DE MONTAJE 3	1					
7	2GH–24186–00	ARANDELA ESPECIAL	1					
8	90387–06299	COLLAR	2					
9	97027–06030	PERNO	2					
10	92907–06600	ARANDELA	2					
11	90119–06213	TORNILLO CON ARANDELA	1					
12	4YR–24181–00	AMORTIGUADOR DE MONTAJE	2					
13	90387–061W9	COLLAR	1					
14	91317–06110	PERNO	1					
15	2VN–24500–01	GRIFO DE COMBUSTIBLE 1	1					
16	4X8–24512–00	.EMPAQUE	1					
17	3AJ–24534–00	.SELLO DE GRIFO	1					
18	98507–03008	.TORNILLO DE CABEZA CON PLANA	2					
19	3AJ–24523–00	.VALVULA	1					
20	90149–06008	TORNILLO DE REGLAJE	2					
21	90202–05193	ARANDELA DE PLANA	2					
22	5DM–24311–00	TUBO DE COMBUSTIBLE 1	1					
23	90467–11044	PRESILLA	2					
24	90464–44109	BRIDA	1					

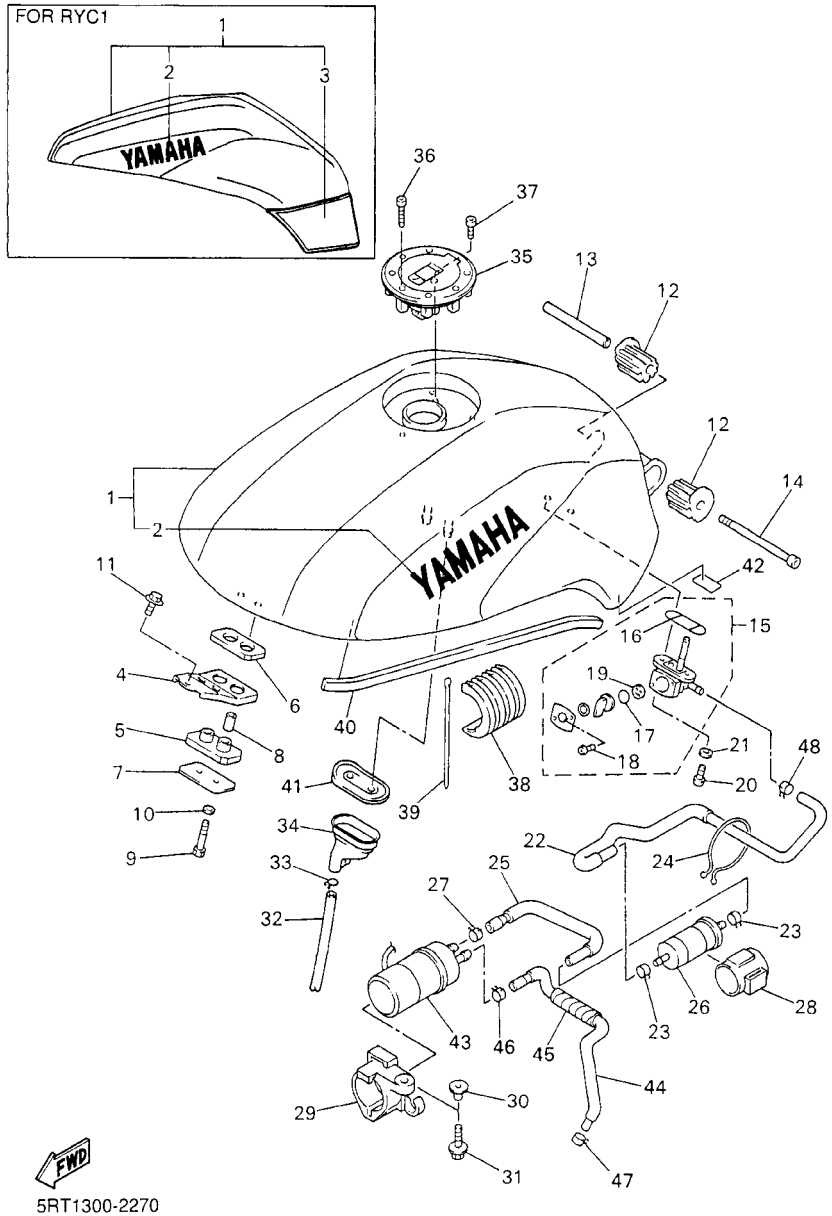

FIG. 27 DEPOSITO DE COMBUSTIBLE

REF. NO.	CODIGO NO.	DESCRIPCION	5RT1					OBSERVACION
25	5DM–24312–00	TUBO 2	1					
26	1FK–24560–10	FILTRO COMPLETO	1					
27	90467–13073	PRESILLA	1					
28	1FK–24566–00	SOPORTE DEL FILTRO	1					
29	5DM–24398–00	BANDA 1	1					
30	90387–07391	COLLAR	1					
31	95807–06020	TUERCA DE REBORDE	1					
32	90445–104F3	TUBO (L540)	1					
33	90467–09006	PRESILLA	1					
34	5DM–24217–00	CUBIERTA	1					
35	5JJ–24602–00	TAPON COMPLETO	1					
36	90110–05112	TORNILLO ALLEN	3					
37	91314–05010	PERNO	1					
38	4YR–24183–01	AMORTIGUADOR DE MONTAJE 3	2					
39	3MA–82591–00	BANDA	2					
40	4YR–24188–10	MOLDURA DEPOSITO COMBUST.	2					
41	4YR–2414G–00	SELLO	1					
42	3FY–21575–01	SELLO 1	1					
43	5RT–13907–00	BOMBA DE COMBUSTIBLE COMPLETA	1					
44	5DM–14294–00	MANGUERA	1					
45	5DM–14293–00	CUBIERTA	1					
46	90467–13123	PRESILLA	1					
47	90467–11032	PRESILLA	1					
48	90467–11175	PRESILLA	1					

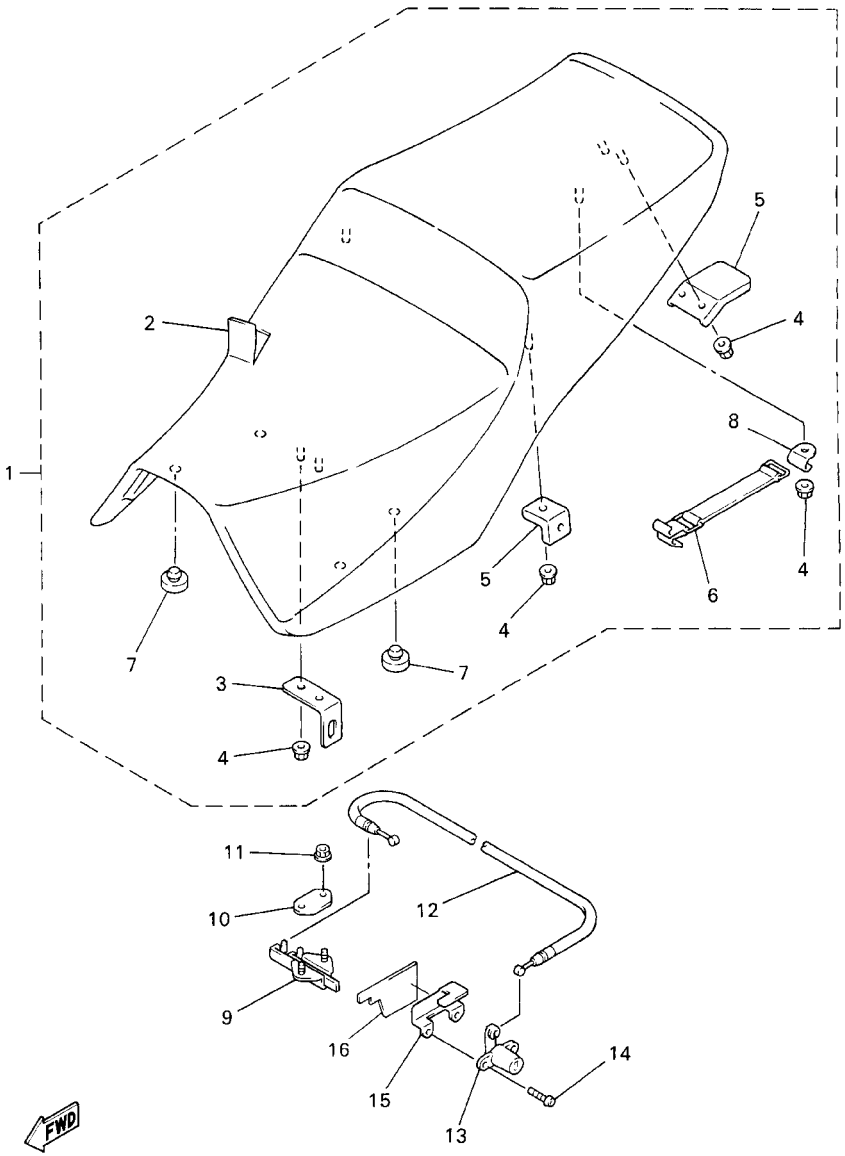

FIG. 28 ASIENTO

REF. NO.	CODIGO NO.	DESCRIPCION	5RT1					OBSERVACION
1	5DM–24730–10	SILLIN DOBLE COMPLETO	1					
2	5DM–24731–10	.FUNDA DE SILLIN	1					
3	4HM–24728–00	.SOPORTE DE ASIENTO	1					
4	90179–06635	.TUERCA	5					
5	4YR–2471A–01	.SOPORTE DE ASIENTO	1					
6	4YR–21376–00	.BANDA DE HERRAMIENTA	1					
7	1T4–24741–00	.COJIN DE ASIENTO	4					
8	4YR–24754–00	.GANCHO DE ASIENTO	1					
9	4BP–24780–00	TORNILLO CONTROL DE AIRE	1					
10	4BP–24792–00	PLACA	1					
11	95707–06500	TUERCA DE BRIDA	2					
12	4YR–2478E–00	CABLE	1					
13	2TV–W2470–00	ASIENTO DE CIERRE COMPLETO	1					
14	90149–06308	TORNILLO DE REGLAJE	2					
15	4YR–2478X–01	SOPORTE	1					
16	5RT–24723–00	AMORTIGUADOR DE ASIENTO	1					

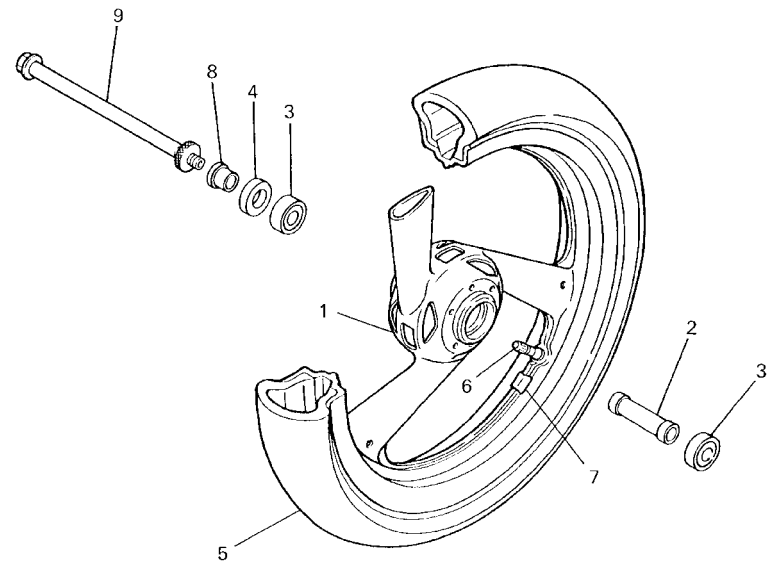

4YR010-7290

FIG. 29 RUEDA DELANTERA

REF. NO.	CODIGO NO.	DESCRIPCION	5RT1					OBSERVACION
1	4HM–25168–00–98	RUEDA FUNDIDA DELANTERA	1					LGB
2	90560–17358	SEPARADOR	1					
3	93306–20314	COJINETE	2					
4	93102–23252	SELLO ACEITE	1					
5	94111–1712U	NEUMATICO (110/70ZR17 54W D207F)	1					UR DUNLOP
	94111–1712W	NEUMATICO (110/70ZR17 54W BT57F)	1					UR BRIDGESTONE
6	93900–00030	VALVULA DE ARO	1					
7	5MT–25398–00	BALANCEADOR DE RUEDA(10G)	1					UR
	5MT–25398–10	BALANCEADOR DE RUEDA (20G)	1					UR
	5MT–25398–20	BALANCEADOR DE RUEDA (30G)	1					UR
8	90387–177V5	COLLAR	1					
9	3MA–25181–01	EJE DE LA RUEDA	1					

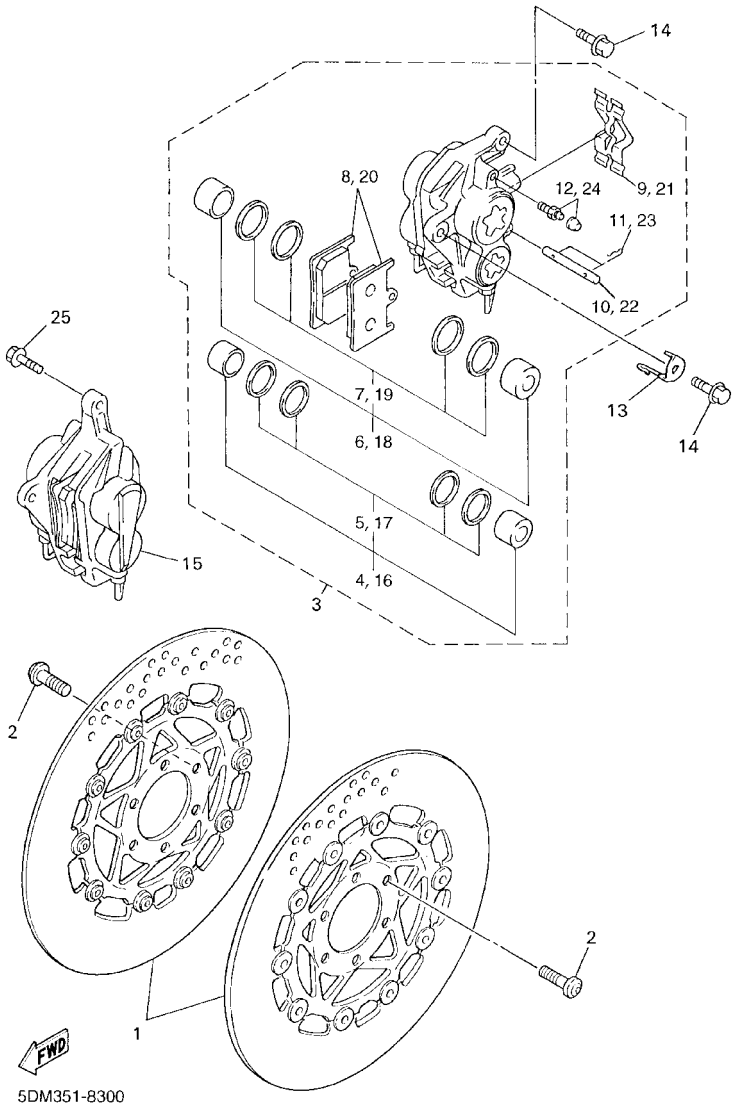

FIG. 30 CALIBRE FRENO DELANTERA

REF. NO.	CODIGO NO.	DESCRIPCION	5RT1					OBSERVACION
1	4HM–2581T–11	DISCO DE FRENO	2					
2	90109–083G4	PERNO	12					
3	5DM–2580T–00	CALIBRE COMPLETO (IZQUIERDO)	1					
4	4SV–W0057–00	.PISTON COMPLETO PINZA	1					
5	3MA–W0047–10	..JUEGO DE RETENES DE PINZA	1					
6	4SV–W0057–10	.PISTON COMPLETO PINZA	1					
7	3GM–W0047–10	..JUEGO DE RETENES DE PINZA	1					
8	4SV–W0045–00	.JUEGO DE COJIN DE FRENO	1					
9	4SV–25919–00	.SOPORTE DE PASTILLAS	1					
10	4SV–25924–00	.PASADOR	1					
11	3GM–25925–00	.PRESILLA	2					
12	1J3–W0048–00	.CJTO TORNILLO DE PURGA	1					
13	4YR–23317–00	SOSTEN DE CABLE	1					
14	90105–10638	TORNILLO	2					
15	5DM–2580U–00	CALIBRE COMPLETO (DERECO)	1					
16	4SV–W0057–00	.PISTON COMPLETO PINZA	1					
17	3MA–W0047–10	..JUEGO DE RETENES DE PINZA	1					
18	4SV–W0057–10	.PISTON COMPLETO PINZA	1					
19	3GM–W0047–10	..JUEGO DE RETENES DE PINZA	1					
20	4SV–W0045–00	.JUEGO DE COJIN DE FRENO	1					
21	4SV–25919–00	.SOPORTE DE PASTILLAS	1					
22	4SV–25924–00	.PASADOR	1					
23	3GM–25925–00	.PRESILLA	2					
24	1J3–W0048–00	.CJTO TORNILLO DE PURGA	1					
25	90105–10638	TORNILLO	2					

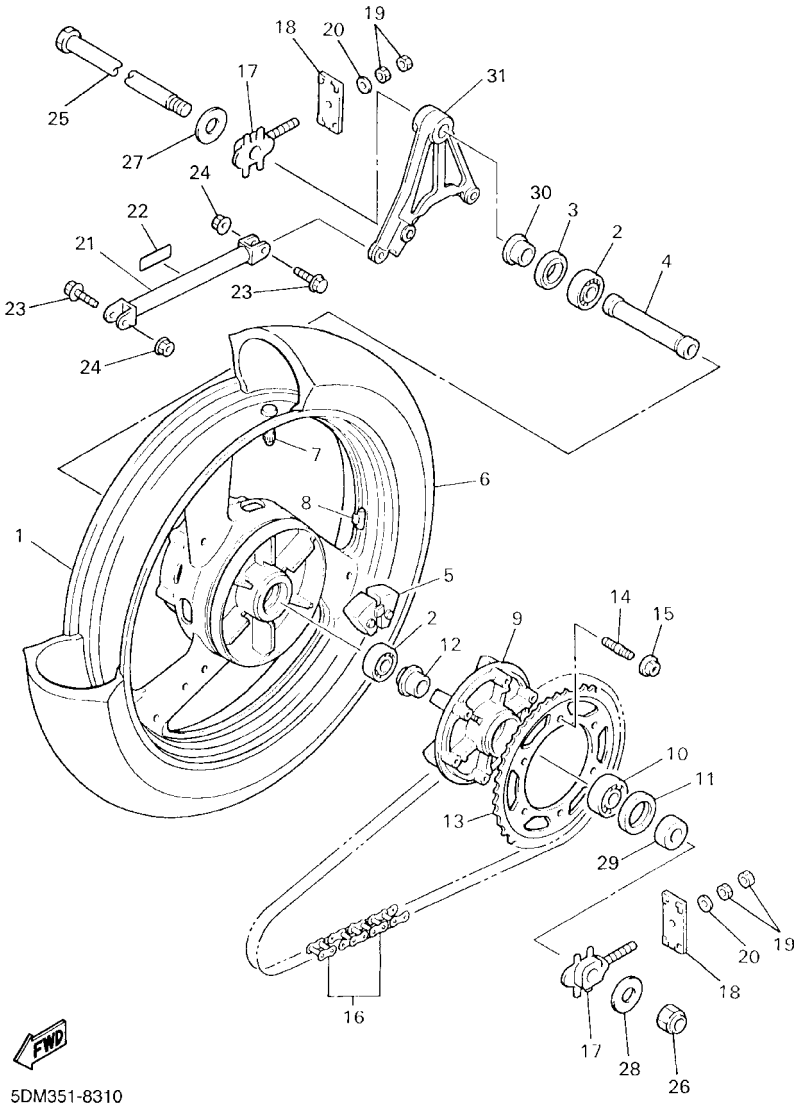

FIG. 31 RUEDA TRASERA

REF. NO.	CODIGO NO.	DESCRIPCION	5RT1					OBSERVACION
1	4JH–25338–00–98	RUEDA FUNDIDA TRASERA	1					LGB
2	93306–20417	COJINETE	2					
3	93102–28022	SELLO ACEITE	1					
4	90387–2004F	COLLAR	1					
5	4FM–25364–00	AMORTIGUADOR	6					
6	94116–1712V	NEUMATICO (160/60ZR17 69W D207)	1					UR DUNLOP
	94116–1712X	NEUMATICO (160/60ZR17 69W BT57R)	1					UR BRIDGESTONE
7	93900–00030	VALVULA DE ARO	1					
8	5MT–25398–00	BALANCEADOR DE RUEDA(10G)	1					UR
	5MT–25398–10	BALANCEADOR DE RUEDA (20G)	1					UR
	5MT–25398–20	BALANCEADOR DE RUEDA (30G)	1					UR
9	4FM–25366–00	EMBRAGUE DE MASA	1					
10	93306–20644	COJINETE	1					
11	93106–40041	SELLO ACEITE	1					
12	90387–2004E	COLLAR	1					
13	5DM–25448–10	CORONA (48T)	1					
14	90116–10575	ESPARRAGO	6					
15	95607–10200	TUERCA DE AUTO–CIERRE	6					
16	94582–01110	CADENA	1					
17	4YR–25388–00	TIRADOR DE CADENA 1	2					
18	2GH–25389–00	TIRADOR DE CADENA 2	2					
19	95307–08600	TUERCA	4					
20	92907–08200	ARANDELA	2					
21	1AE–25371–01	BARRA TENSORA	1					
22	1JK–21268–00	SELLO	1					
23	90105–083A9	TORNILLO	2					
24	95607–08200	TUERCA DE AUTO–CIERRE	2					

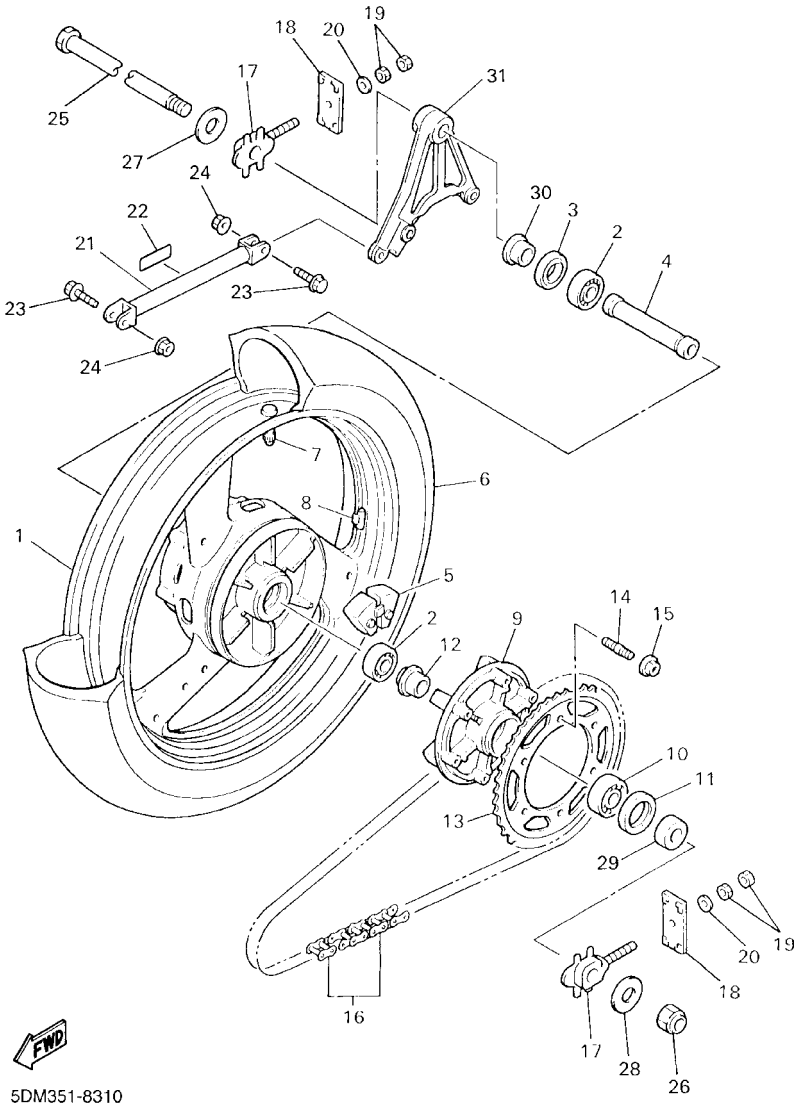

FIG. 31 RUEDA TRASERA

REF. NO.	CODIGO NO.	DESCRIPCION	5RT1					OBSERVACION
25	4YR–25381–00	EJE DE RUEDA	1					
26	90185–18167	TUERCA AUTOBLOCANTE	1					
27	90201–200P6	ARANDELA PLANA	1					
28	90201–180P5	ARANDELA PLANA	1					
29	90387–203U5	COLLAR	1					
30	90387–2004D	COLLAR	1					
31	4YR–25819–00	SOPORTE DE CALIBRE	1					

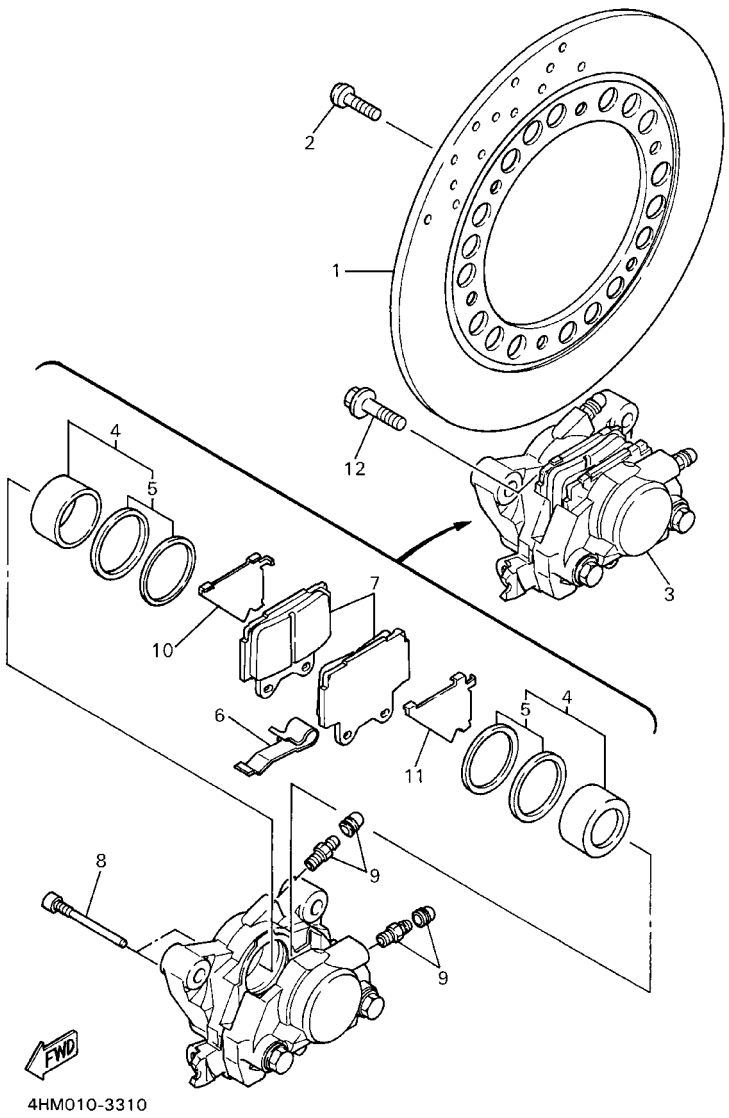

FIG. 32 CALIBRE FRENO TRASERA

REF. NO.	CODIGO NO.	DESCRIPCION	5RT1					OBSERVACION
1	4JH–2582W–00	DISCO DE FRENO TRASEROS 2	1					
2	90109–083G4	PERNO	6					
3	4HM–2580W–00	CALIBRE COMPLETO TRASEROS 2	1					
4	51L–W0057–00	.PISTON COMPLETO PINZA	1					
5	51L–W0047–00	..JUEGO DE RETENES DE PINZA	1					
6	51L–25919–00	.SOPORTE DE PASTILLAS	1					
7	3TJ–W0046–00	.JUEGO DE PASTILLAS DE FRENO 2	1					
8	4FL–25924–00	.PASADOR	2					
9	51L–W0048–00	.CJTO TORNILLO DE PURGA	2					
10	47X–25827–00	.SOPORTE PASTILLA IZQUIERDO	1					
11	47X–25827–10	.SOPORTE PASTILLA IZQUIERDO	1					
12	90105–10561	TORNILLO	2					

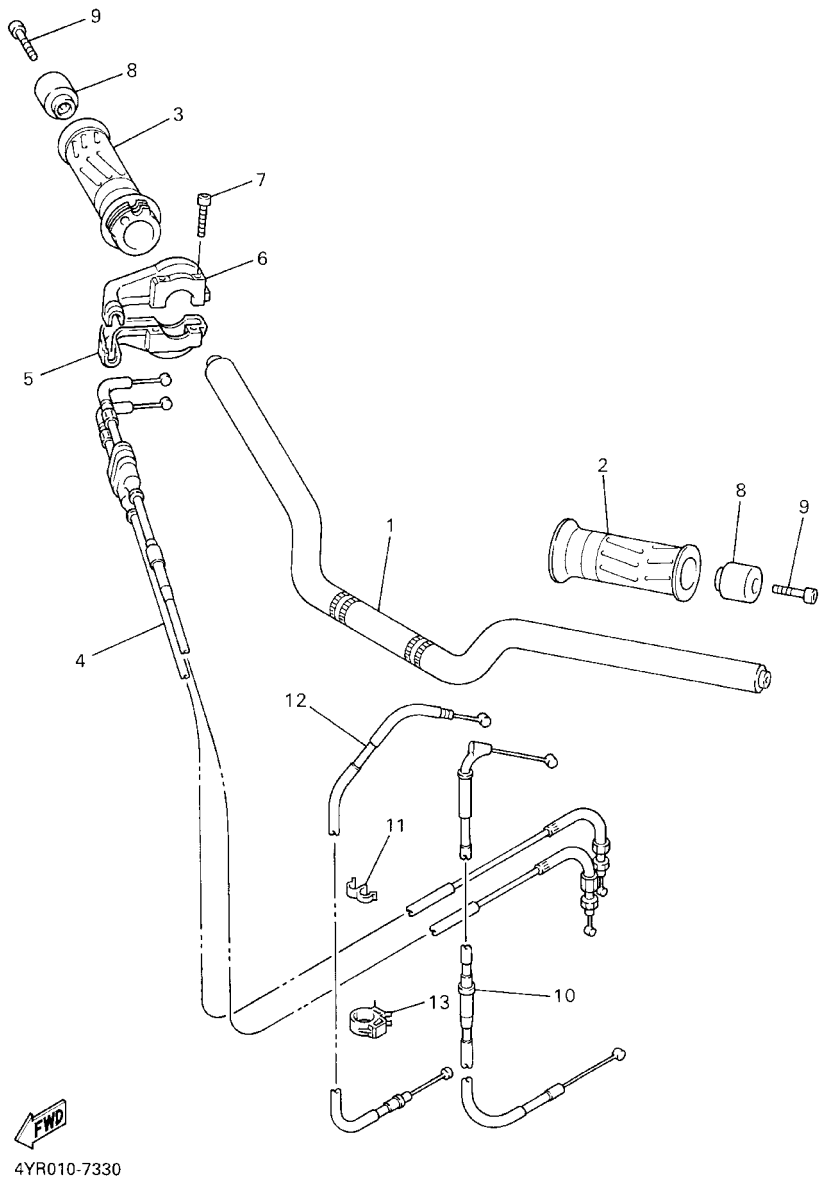

FIG. 33 MANUBRIO. CABLE

REF. NO.	CODIGO NO.	DESCRIPCION	5RT1					OBSERVACION
1	5RT–26110–00	MANUBRIO COMPLETE	1					
2	4YR–26241–01	EMPUNADURA	1					
3	4YR–26240–01	EMPUNADURA COMPLETA	1					
4	5RT–26302–00	CABLE DE ACELERADOR COMPLETO	1					
5	4KG–26281–00	TAPA DE EMPUNADURA SUPERIOR	1					
6	3XW–26282–01	TAPA DE EMPUNADURA INFERIOR	1					
7	91317–05035	PERNO	2					
8	4YR–26246–00	EXTREMO DE EMPUNADURA	2					
9	91317–06035	PERNO	2					
10	5RT–26330–00	CABLE DE ARRANQUE COMPLETO	1					
11	90468–15139	PRESILLA	1					
12	5RT–26335–00	CABLE DE EMBRAGUE	1					
13	90464–15192	BRIDA	1					

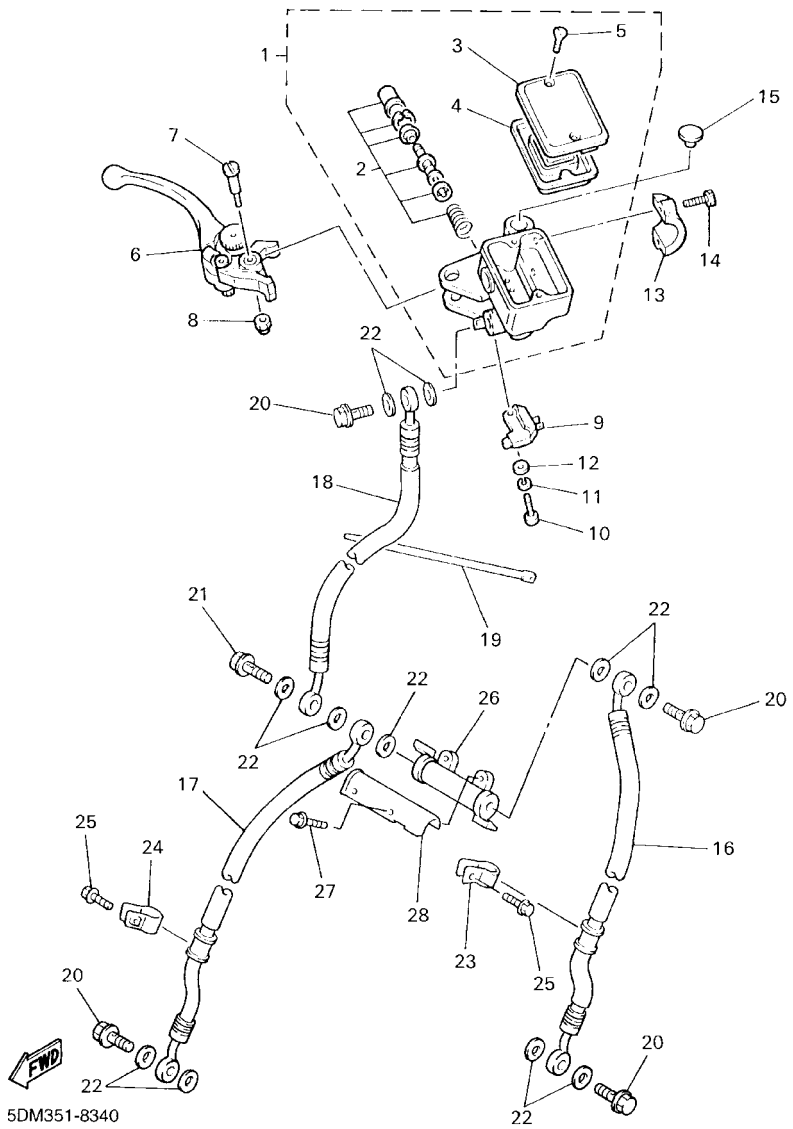

FIG. 34 CILINDRO MAESTRO DELANTERO

REF. NO.	CODIGO NO.	DESCRIPCION	5RT1					OBSERVACION
1	5DM–W2587–00	CILINDRO MAESTRO SUB COMPLET	1					
2	5DM–W0041–50	.JUEGO DE CILINDRO MAESTRO	1					
3	4HM–W2585–00	.TAPA DE TANQUE DE RESERVA	1					
4	4HM–25854–00	.DIAFRAGMA TANQUE RESERVA	1					
5	98706–04012	.TORNILLO DE CABEZA PLANA	2					
6	5EB–83922–01	PALANCA 2	1					
7	3FV–2589F–00	PERNO DE PALANCA	1					
8	95606–06100	PERNO DE PUNTAL	1					
9	3FV–83980–00	INTERRUP.PARADA DELANTERO	1					
10	98502–04012	TORNILLO DE CABEZA CON PLANA	1					
11	92902–04100	ARANDELA	1					
12	92902–04600	ARANDELA	1					
13	4HM–25867–00	SOPORTE DE CILINDRO MAESTRO	1					
14	91316–06020	PERNO	2					
15	90338–09012	TAPON	1					
16	5DM–25872–00	MANGUERA DE FRENO 1	1					
17	5DM–25873–00	MANGUERA DE FRENO 2	1					
18	4YR–25874–00	MANGUERA DE FRENO	1					
19	1UA–82591–00	BANDA	1					
20	90401–10159	PERNO DE UNION	4					
21	90401–10160	PERNO DE UNION	1					
22	90201–10118	ARANDELA PLANA	11					
23	3EN–25875–01	SOPORTE DE MANGUERA FRENO 1	1					
24	2R8–25876–01	SOPORTE DE MANGUERA FRENO 2	1					
25	95027–06025	PERNO, DE BRIDA	2					
26	42H–25885–01	UNION	1					
27	95027–06020	PERNO, DE BRIDA	2					

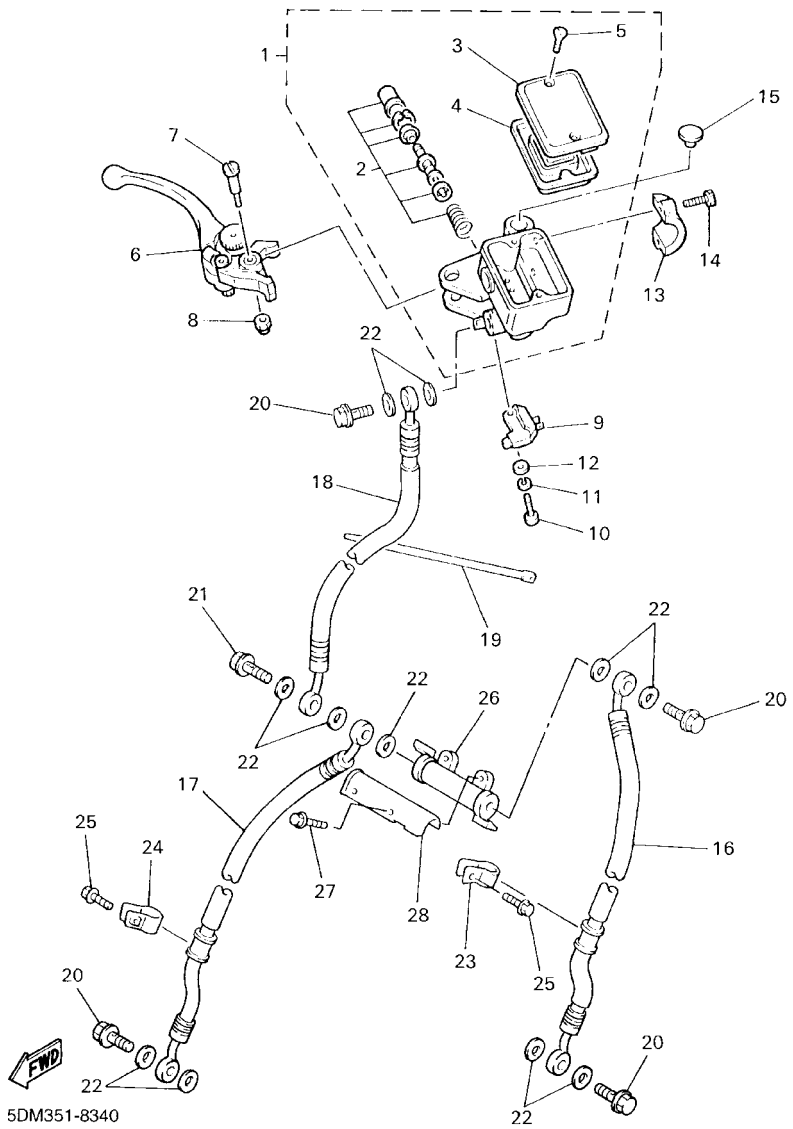

FIG. 34 CILINDRO MAESTRO DELANTERO

REF. NO.	CODIGO NO.	DESCRIPCION	5RT1					OBSERVACION
28	4YR–82361–00	GRAMPA DE CABLE	1					

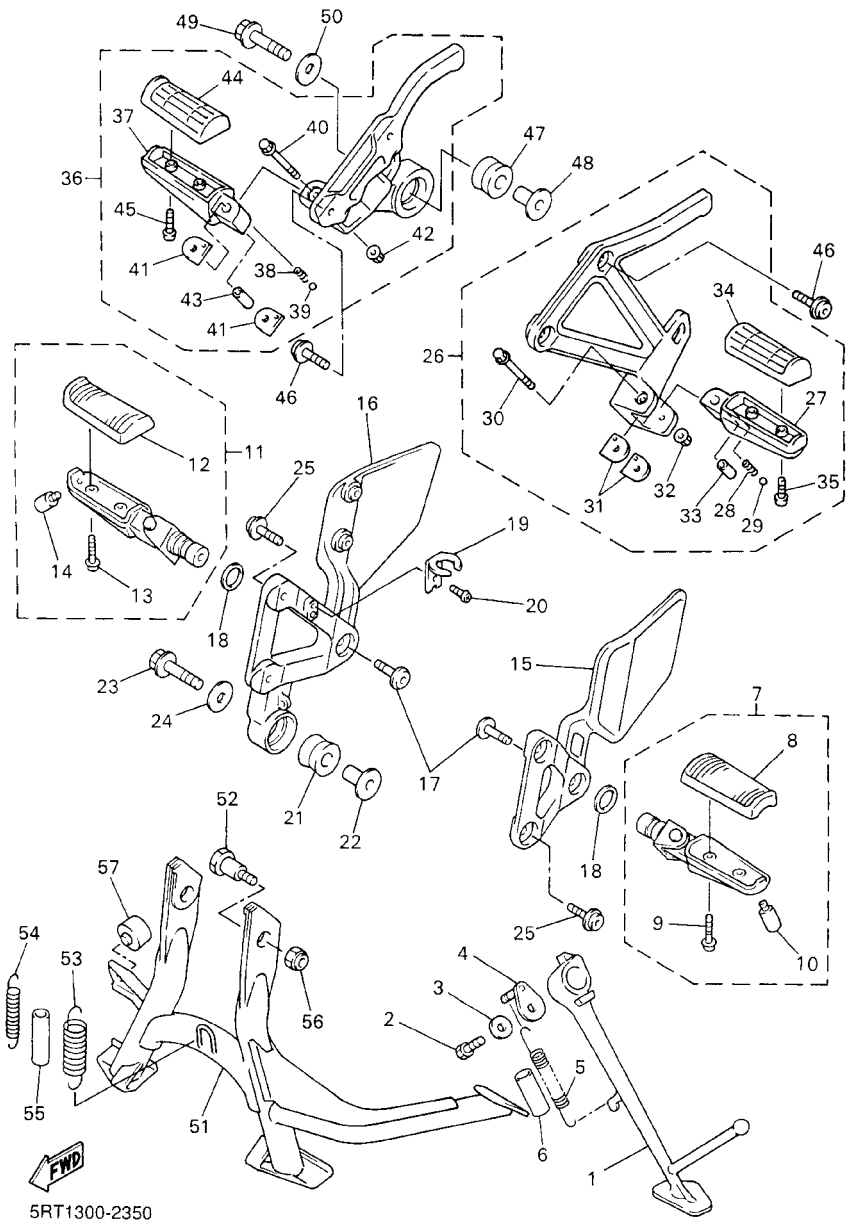

FIG. 35 SOPORTE. APOYAPIE

REF. NO.	CODIGO NO.	DESCRIPCION	5RT1					OBSERVACION
1	4YR–27311–00	PUNTAL LATERAL	1					
2	90101–08662	TORNILLO	1					
3	90201–081R9	ARANDELA PLANA	1					
4	36Y–27352–00	GANCHO DE PUNTAL LATERAL	1					
5	90506–20006	RESORTE DE TENSION	1					
6	90445–197J2	TUBO (L60)	1					
7	5DM–27410–00	APOYAPIE DELANTERO (MI)	1					
8	4BP–27413–00	.CUBIERTA DE APOYAPIE	1					
9	90157–05079	.TORNILLO CABEZA CONICA PLANA	2					
10	4SV–27435–00	.PERNO	1					
11	5DM–27420–00	APOYAPIE DELANTERO (MD)	1					
12	4BP–27413–00	.CUBIERTA DE APOYAPIE	1					
13	90157–05079	.TORNILLO CABEZA CONICA PLANA	2					
14	4SV–27435–00	.PERNO	1					
15	4YR–27442–00	SOPORTE 2	1					
16	4YR–27443–00	SOPORTE 3	1					
17	90109–103A9	PERNO	2					
18	90206–17084	ARANDELA ONDULADA	2					
19	4DN–2144G–00	SOPORTE DE INTERRUPTOR	1					
20	98507–06008	TORNILLO DE CABEZA CON PLANA	1					
21	4SV–27414–00	AMORTIGUADOR DE APOYAPIE	1					
22	90387–1012G	COLLAR	1					
23	95814–08045	TUERCA DE REBORDE	1					
24	90201–087G2	ARANDELA PLANA	1					
25	90109–087F1	PERNO	4					
26	5RT–27430–00	APOYAPIE POSTERIOR COMPLETO 1	1					
27	5RT–27431–00	.APOYAPIE POSTERIOR 1	1					

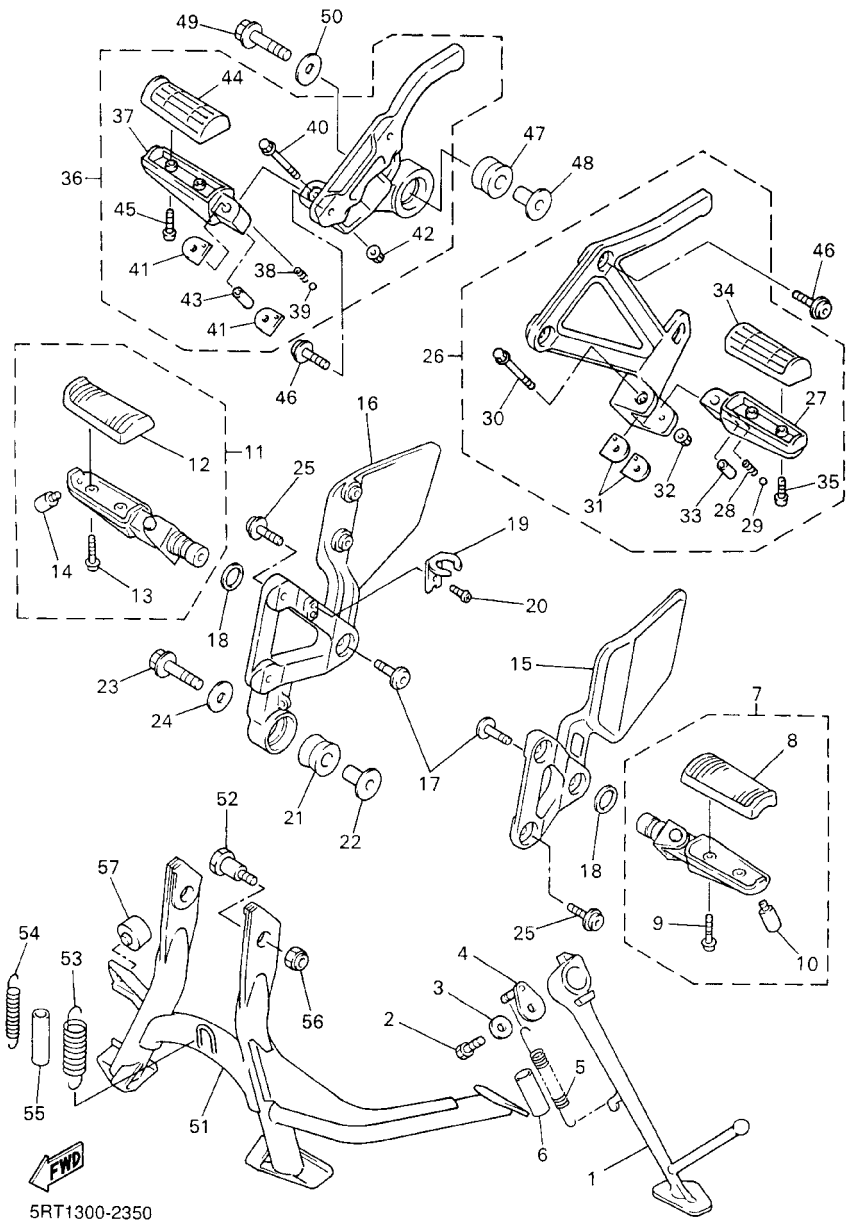

FIG. 35 SOPORTE. APOYAPIE

REF. NO.	CODIGO NO.	DESCRIPCION	5RT1					OBSERVACION
28	90501–12743	.RESORTE DE COMPRESION	1					
29	93501–04011	.BOLA	1					
30	95024–06045	.PERNO, DE BRIDA	1					
31	1HX–27437–00	.ARANDELA ESPECIAL	2					
32	95604–06200	.TUERCA DE AUTO–CIERRE	1					
33	90387–064H8	.COLLAR	1					
34	3YX–27413–00	.CUBIERTA DE APOYAPIE	1					
35	90157–05079	.TORNILLO CABEZA CONICA PLANA	2					
36	5RT–27440–00	APOYAPIE POSTERIOR COMPLETO 2	1					
37	5RT–27441–00	.APOYAPIE POSTERIOR 2	1					
38	90501–12743	.RESORTE DE COMPRESION	1					
39	93501–04011	.BOLA	1					
40	95024–06045	.PERNO, DE BRIDA	1					
41	1HX–27437–00	.ARANDELA ESPECIAL	2					
42	95604–06200	.TUERCA DE AUTO–CIERRE	1					
43	90387–064H8	.COLLAR	1					
44	3YX–27413–00	.CUBIERTA DE APOYAPIE	1					
45	90157–05079	.TORNILLO CABEZA CONICA PLANA	2					
46	90109–087F1	PERNO	4					
47	2H7–27414–00	AMORTIGUADOR DE APOYAPIE	1					
48	90387–10636	COLLAR	1					
49	95814–10040	TUERCA DE REBORDE	1					
50	90201–100A1	ARANDELA PLANA	1					
51	5DM–27111–10	PUNTAL PRINCIPAL	1					
52	90109–101E6	PERNO	2					
53	90506–40508	RESORTE DE TENSION	1					
54	90506–23509	RESORTE DE TENSION	1					

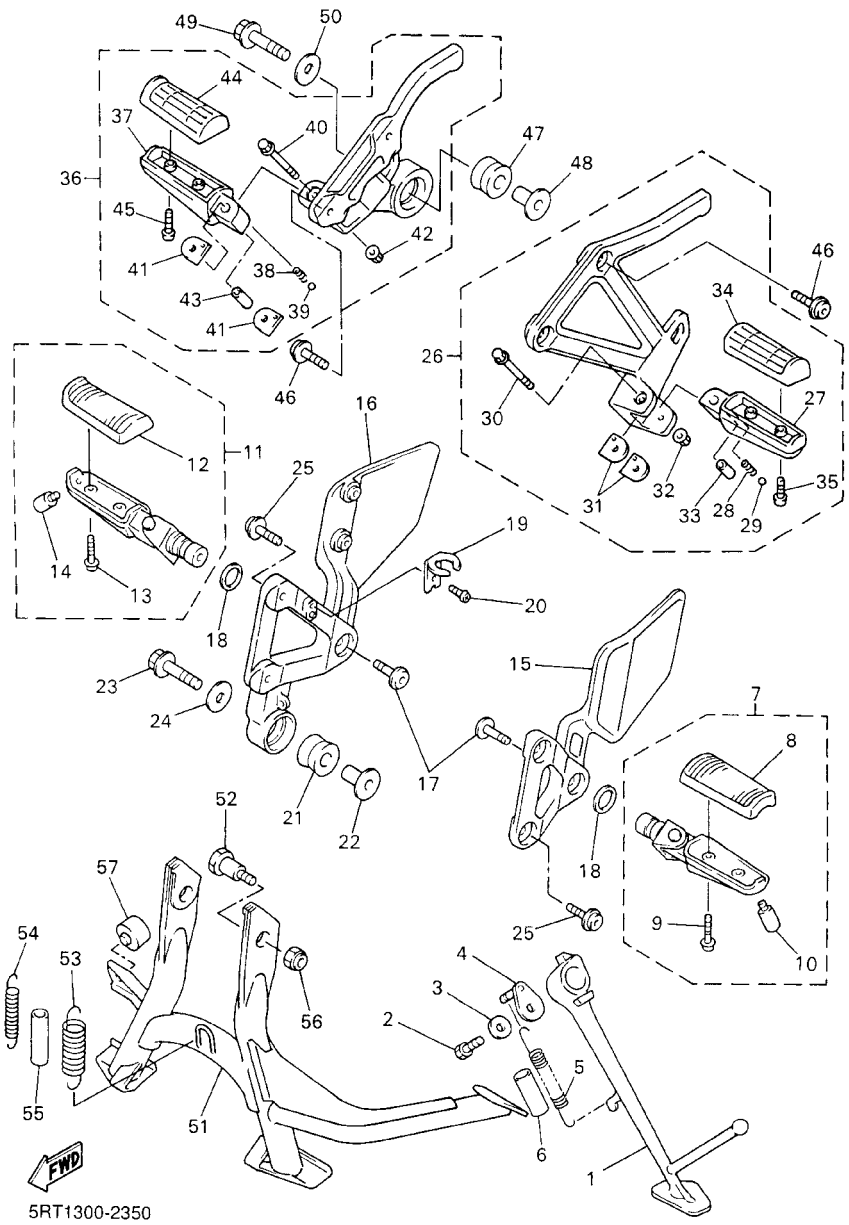

FIG. 35 SOPORTE. APOYAPIE

REF. NO.	CODIGO NO.	DESCRIPCION	5RT1					OBSERVACION
55	90445–170K9	TUBO (L60)	1					
56	90185–10091	TUERCA AUTOBLOCANTE	2					
57	1A0–27114–00	TOPE DE PUNTAL PRINCIPAL	1					

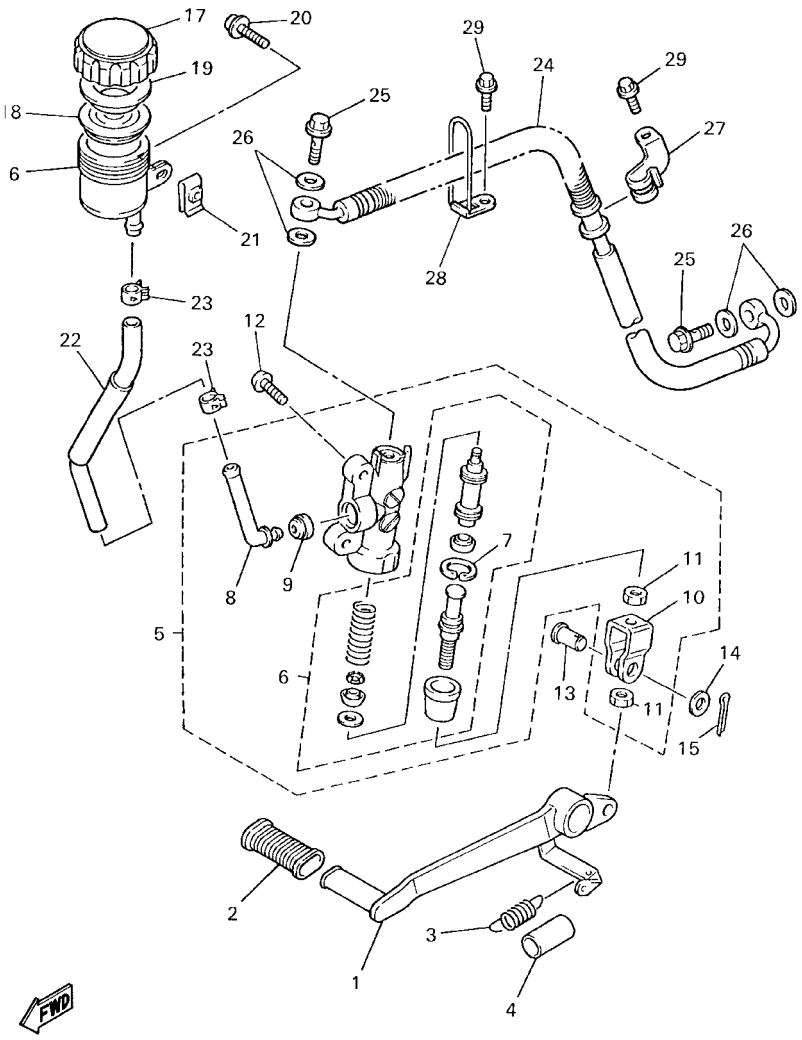

5DM4351-9360

FIG. 36 CILINDRO MAESTRO TRASERO

REF. NO.	CODIGO NO.	DESCRIPCION	5RT1					OBSERVACION
1	3YX–27211–01	PEDAL DE FRENO	1					
2	22N–18113–00	FUNDA DEL PEDAL DEL CAMBIO	1					
3	90506–20377	RESORTE DE TENSION	1					
4	90446–17346	TUBO RESEIRADERO	1					
5	4BP–2583V–00	CILINDRO, MAESTRO TRASERO	1					
6	4BP–W0042–50	.JUEGO DE CILINDRO MAESTRO	1					
7	3LN–2585G–00	..PRECILLA REDONDA	1					
8	4BP–2582A–00	.CONECTOR	1					
9	4BP–2585F–00	.BUJE	1					
10	4BP–27222–00	.UNION	1					
11	95307–08700	.TUERCA	2					
12	92014–08020	PERNO	2					
13	90240–08124	PASADOR CON HOYO	1					
14	90201–08083	ARANDELA PLANA	1					
15	91401–20012	PASADOR DE CHAVETA	1					
16	31A–25894–01	TANQUE DE RESERVA	1					
17	2KF–25852–50	TAPA DE TANQUE DE RESERVA	1					
18	360–25854–01	DIAFRAGMA TANQUE RESERVA	1					
19	2GU–25855–00	BUJE DE DIAFRAGMA	1					
20	90159–06085	TORNILLO CON VALONA	1					
21	90183–06023	TUERCA DE RESORTE	1					
22	5DM–25895–00	MANGUERA DE TANQUE DE RESERVA	1					
23	90467–14057	PRESILLA	2					
24	5RT–2581K–00	MANGUERA, DE FRENO	1					
25	90401–10159	PERNO DE UNION	2					
26	90201–10118	ARANDELA PLANA	4					
27	4FM–25876–00	SOPORTE DE MANGUERA FRENO 2	1					

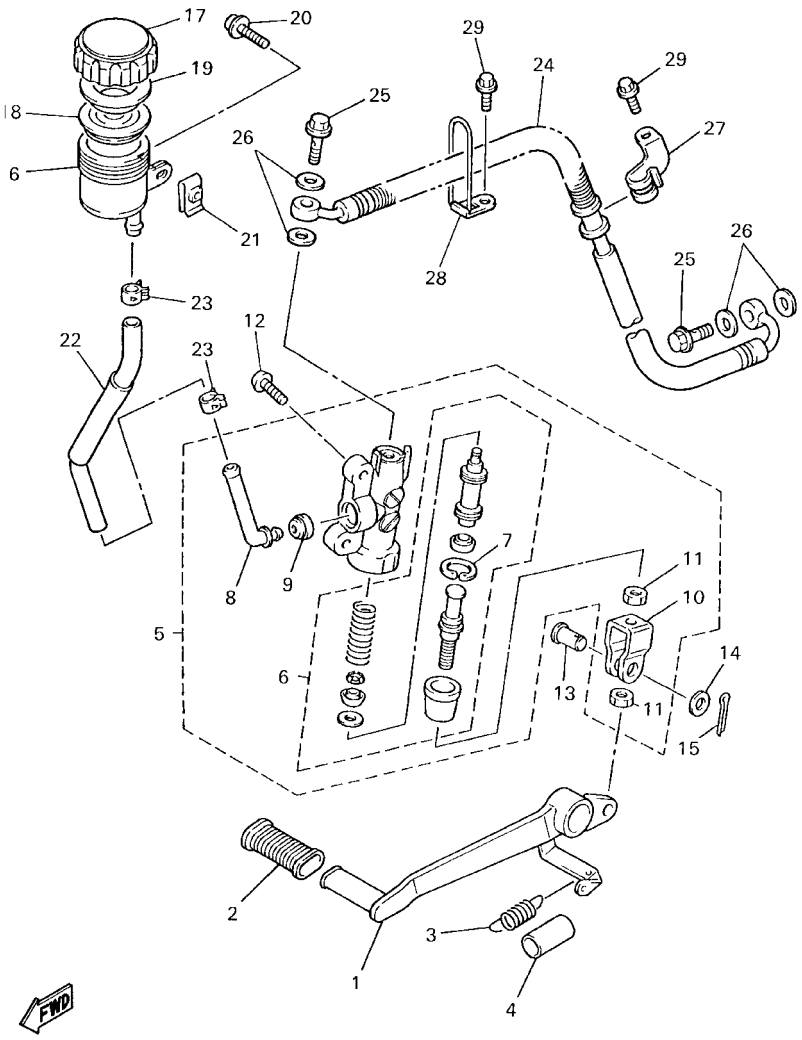

5DM4351-9360

FIG. 36 CILINDRO MAESTRO TRASERO

REF. NO.	CODIGO NO.	DESCRIPCION	5RT1					OBSERVACION
28	4BH–25886–01	SOPORTE DE MANGUERA FRENO	1					
29	95027–06010	PERNO, DE BRIDA	2					

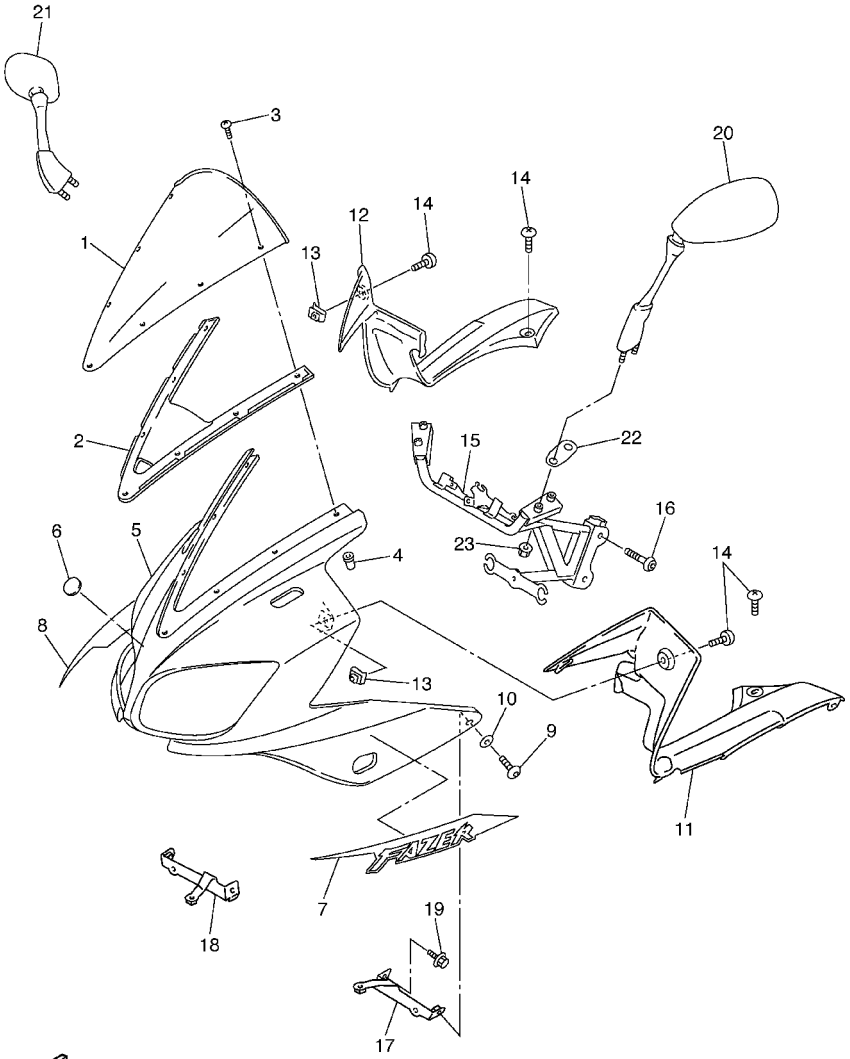

5RT1300-2370

FIG. 37 BOVEDA 1

REF. NO.	CODIGO NO.	DESCRIPCION	5RT1					OBSERVACION
1	5RT–28381–00	PARABRISA	1					
2	5RT–87278–00	CUBIERTA DE MEDIDOR	1					
3	90150–05023	TORNILLO CABEZA REDONDA	7					
4	90179–05523	TUERCA	7					
5	5RT–2835G–00–P0	CARROCERIA, DELANT. SUP. 1	1					UR DPBMC
	5RT–2835G–00–P1	CARROCERIA, DELANT. SUP. 1	1					UR S1
	5RT–2835G–00–P2	CARROCERIA, DELANT. SUP. 1	1					UR RYC1
6	5LV–2836B–00	MARCA	1					
7	5RT–28391–00	CALCOMANIA DE BOVEDA 1	1					UR PARA DPBMC
	5RT–28391–10	CALCOMANIA DE BOVEDA 1	1					UR PARA S1
	5RT–28391–20	CALCOMANIA DE BOVEDA 1	1					UR PARA RYC1
8	5RT–28392–00	CALCOMANIA DE BOVEDA 2	1					UR PARA DPBMC
	5RT–28392–10	CALCOMANIA DE BOVEDA 2	1					UR PARA S1
	5RT–28392–20	CALCOMANIA DE BOVEDA 2	1					UR PARA RYC1
9	90110–06200	TORNILLO ALLEN	2					
10	90202–06170	ARANDELA DE PLANA	2					
11	5RT–2836K–00	PANEL 1	1					
12	5RT–2836L–00	PANEL 2	1					
13	90183–05074	TUERCA DE RESORTE	2					
14	90154–05013	TORNILLO DE LIGAR	4					
15	5RT–28356–00	SOPORTE 1	1					
16	90110–08071	TORNILLO ALLEN	2					
17	5RT–2836A–00	SOPORTE 1	1					
18	5RT–2836E–00	SOPORTE 2	1					
19	95807–06010	TUERCA DE REBORDE	2					
20	5LV–26280–00	ESPEJO COMPLETO (IZQUIERDO)	1					
21	5LV–26290–00	ESPEJO COMPLETO (DERECHO)	1					

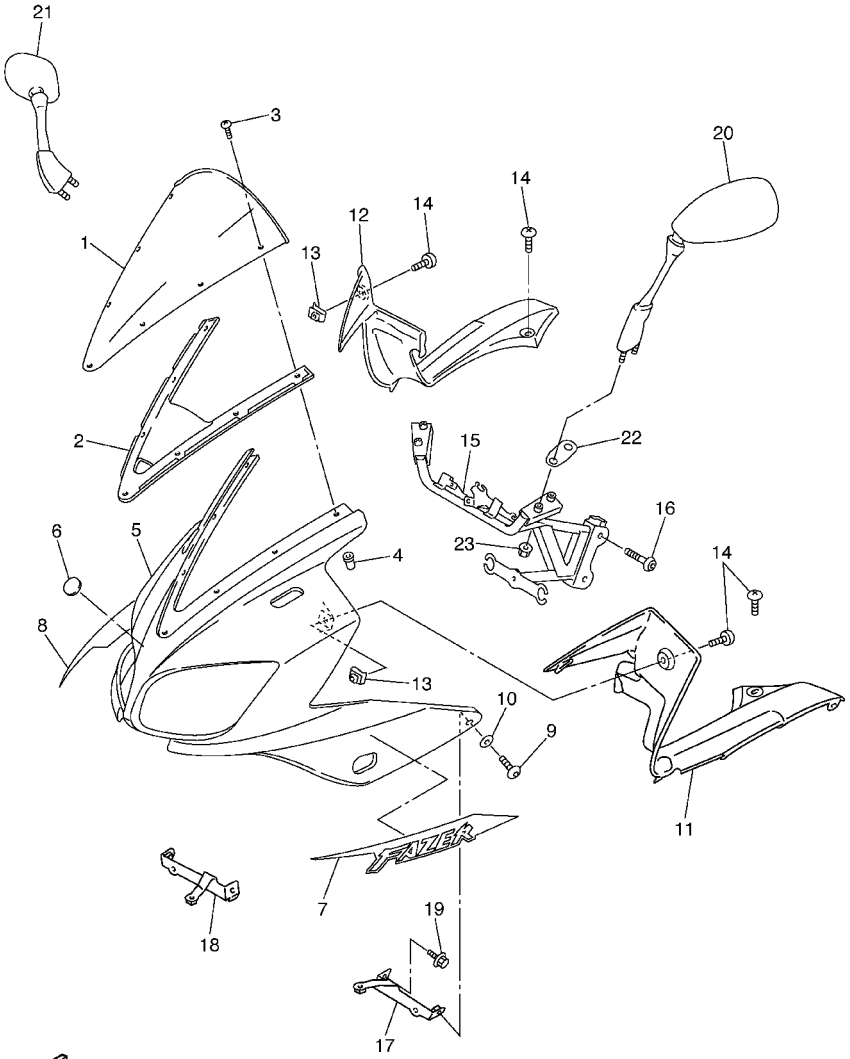

5RT1300-2370

FIG. 37 BOVEDA 1

REF. NO.	CODIGO NO.	DESCRIPCION	5RT1					OBSERVACION
22	4SV–26298–00	PLACA DE ESPEJO 1	2					
23	95707–06500	TUERCA DE BRIDA	4					

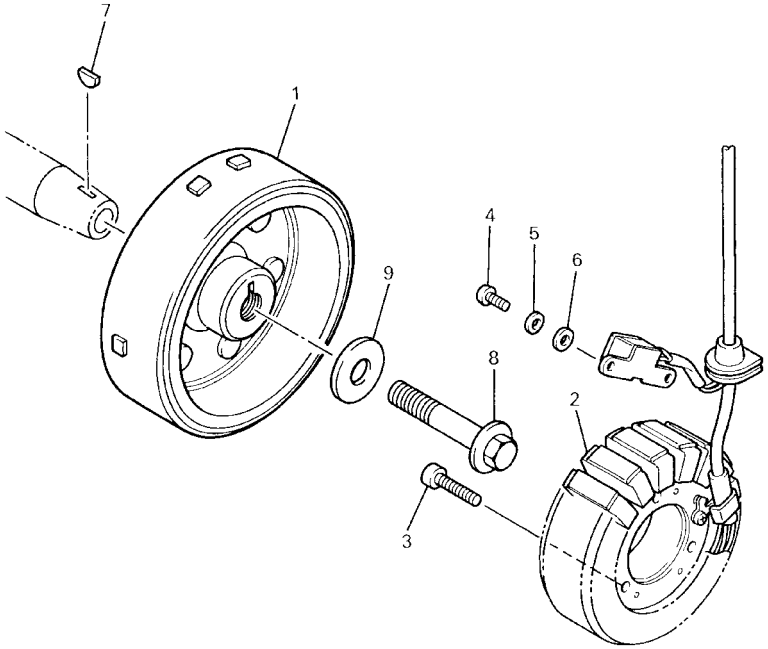

4YR010-7380

FIG. 38 GENERADOR

REF. NO.	CODIGO NO.	DESCRIPCION	5RT1					OBSERVACION
1	5RT–81450–00	ROTOR COMPLETO	1					
2	5RT–81410–00	ESTATOR COMPLETO	1					
3	92017–06030	PERNO	3					
4	98507–05016	TORNILLO DE CABEZA CON PLANA	2					
5	92907–05600	ARANDELA	2					
6	90201–05027	ARANDELA PLANA	2					
7	90280–03047	CUNA WOODRUFF	1					
8	90105–12584	TORNILLO	1					
9	90201–121H0	ARANDELA PLANA	1					

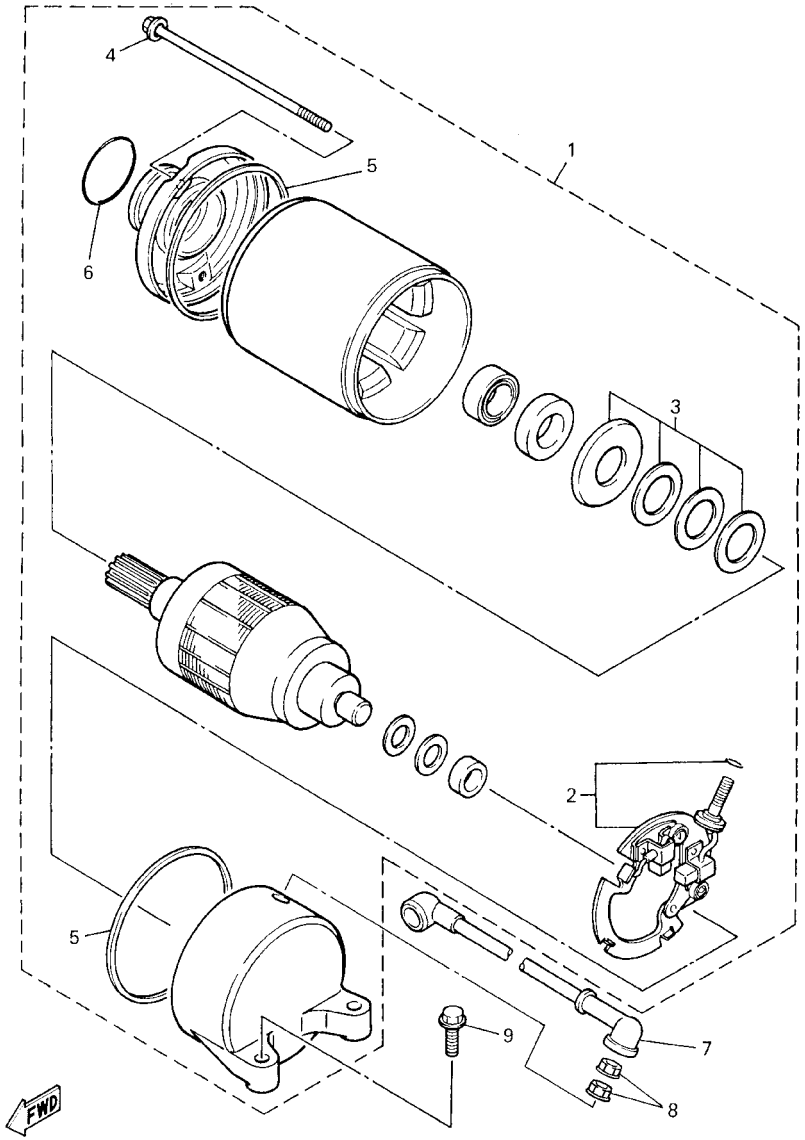

FIG. 39 MOTOR DE ARRANQUE

REF. NO.	CODIGO NO.	DESCRIPCION	5RT1					OBSERVACION
1	4YR–81890–00	MOTOR DE ARRANQUE COMPLETO	1					
2	3HE–81840–00	.SOSTEN DE ESCOBILLA COMPLETO	1					
3	3AJ–81809–00	.JUEGO DE ARANDELA	1					
4	3HE–81826–00	.PERNO	2					
5	11H–81844–00	.EMPAQUE	2					
6	1FK–81847–00	.ANILLO GOMA	1					
7	4YR–81815–00	CABLE, MOTOR DE ARRANQUE	1					
8	4XV–8182A–00	TUERCA	2					
9	90105–060A0	TORNILLO	2					

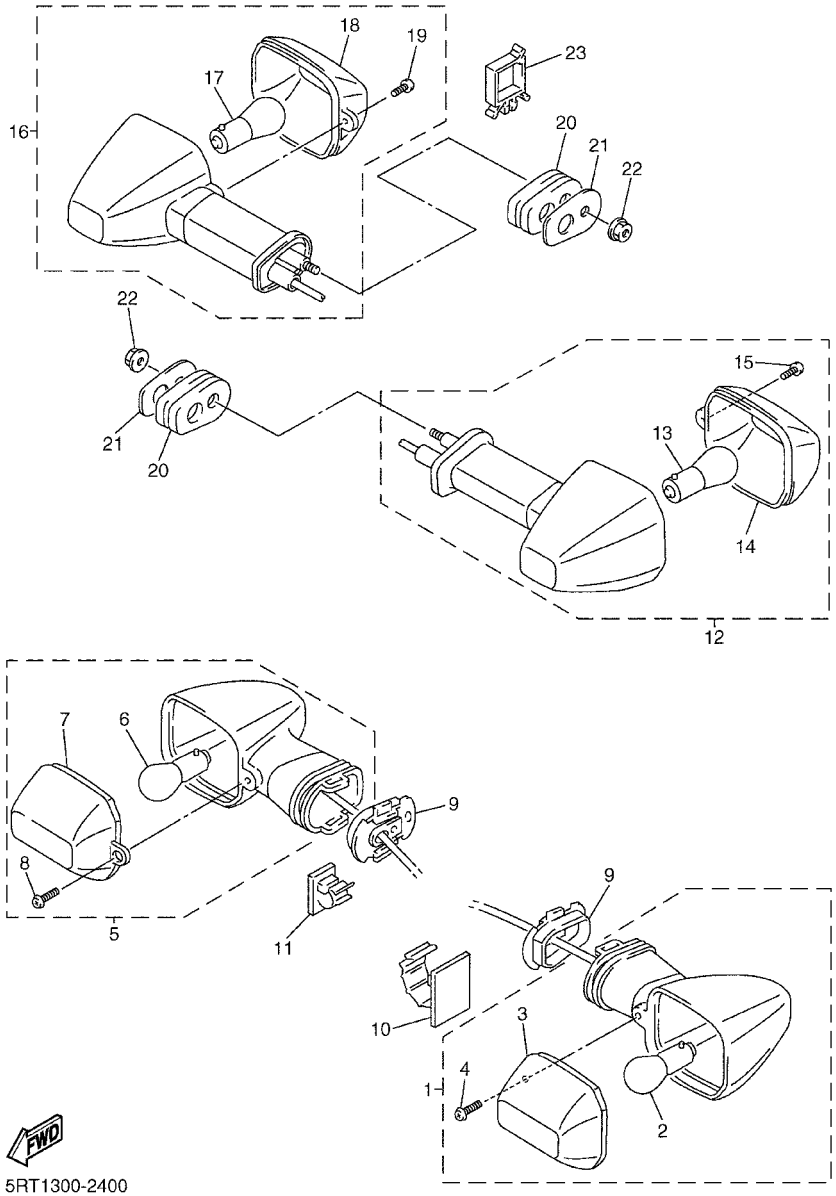

5RT1300-2400

FIG. 40 LUZ DE DESTELLADOR

REF. NO.	CODIGO NO.	DESCRIPCION	5RT1					OBSERVACION
1	5DM–83310–00	DESTELLADOR DE LUZ DELANT.	1					
2	306–83311–40	.BOMBILLA (12V–21W)	1					
3	4JH–83332–00	.LENTE DE DESTELLADOR	1					
4	97702–40610	.TORNILLO ROSCA HEMBRA	1					
5	5DM–83320–00	DESTELLADOR DE LUZ DELANT.	1					
6	306–83311–40	.BOMBILLA (12V–21W)	1					
7	4JH–83342–00	.LENTE DE DESTELLADOR	1					
8	97702–40610	.TORNILLO ROSCA HEMBRA	1					
9	5DM–8331L–00	PLACA TOPE	2					
10	90464–20003	BRIDA	1					
11	90464–62085	BRIDA	1					
12	4JH–83330–00	DESTELLADOR DE LUZ TRAS.COMPL.	1					
13	306–83311–40	.BOMBILLA (12V–21W)	1					
14	4JH–83342–00	.LENTE DE DESTELLADOR	1					
15	97702–40610	.TORNILLO ROSCA HEMBRA	1					
16	4JH–83340–00	DESTELLADOR DE LUZ COMPL.	1					
17	306–83311–40	.BOMBILLA (12V–21W)	1					
18	4JH–83332–00	.LENTE DE DESTELLADOR	1					
19	97702–40610	.TORNILLO ROSCA HEMBRA	1					
20	4FM–83345–00	TAPON CIEGO	2					
21	4FM–83369–00	SOPORTE DE DESTELLADOR 2	2					
22	95707–06500	TUERCA DE BRIDA	2					
23	90464–16025	BRIDA	1					

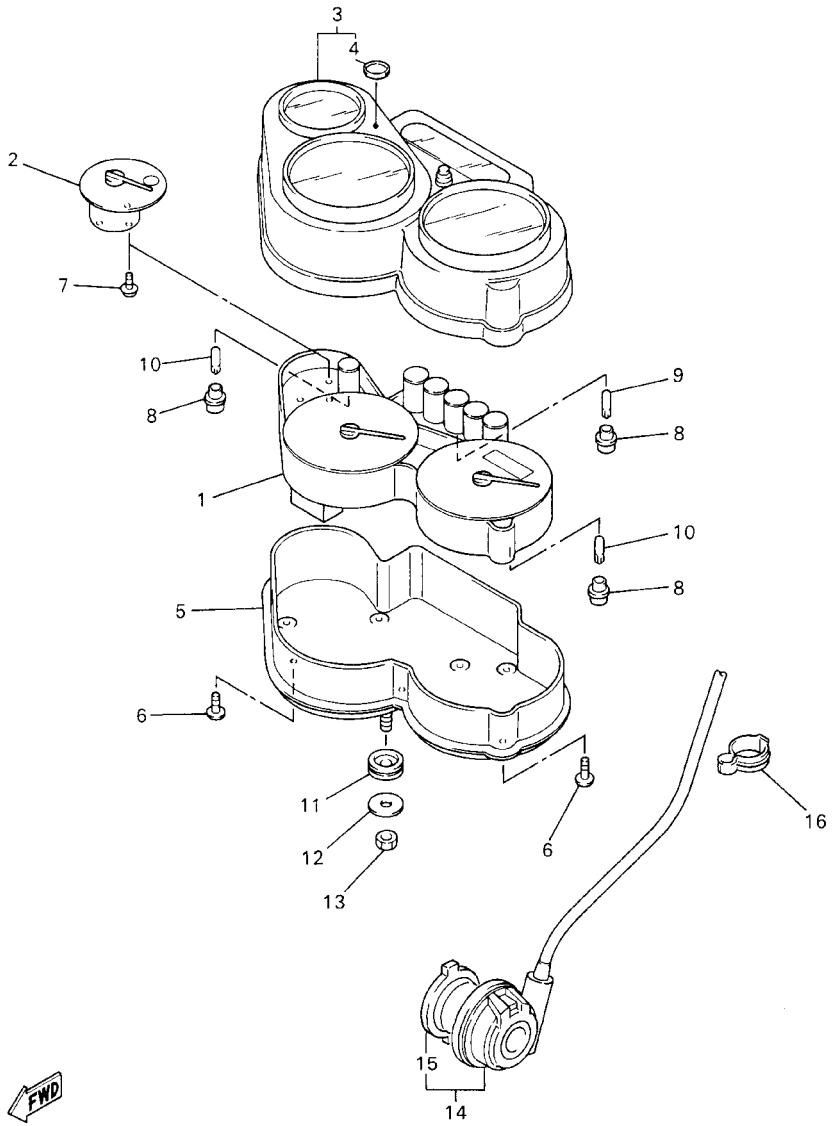

5DMC351-1410

FIG. 41 MEDIDOR

REF. NO.	CODIGO NO.	DESCRIPCION	5RT1					OBSERVACION
1	5RT–83570–00	VELOCIMETRO COMPLETO	1					
2	4YR–85750–01	MEDIDOR DE COMBUSTIBLE COMPL.	1					
3	5RT–8353E–00	CAJA DE MEDIDOR SUPERIOR	1					
4	5DM–2341B–00	.EMBLEMA	1					
5	4YR–83572–00	CAJA DE VELOCIMETRO INFERIOR	1					
6	97707–40018	TORNILLO ROSCA HEMBRA	7					
7	4YR–8362Y–00	TORNILLO ESPECIAL	3					
8	4YR–83534–00	ENCASTRE DE NEUTRO	9					
9	4YR–83517–00	AMPOLLETA (12V–1.4W T5)	5					
10	4YR–83517–10	AMPOLLETA (12V–2W T5)	4					
11	90480–14585	TAPON	3					
12	90201–06380	ARANDELA PLANA	3					
13	95307–06600	TUERCA	3					
14	4YR–83755–02	SENSOR DE VELOCI	1					
15	4YR–2517G–00	.ROTOR DE SENSOR	1					
16	90465–14310	BRIDA	4					

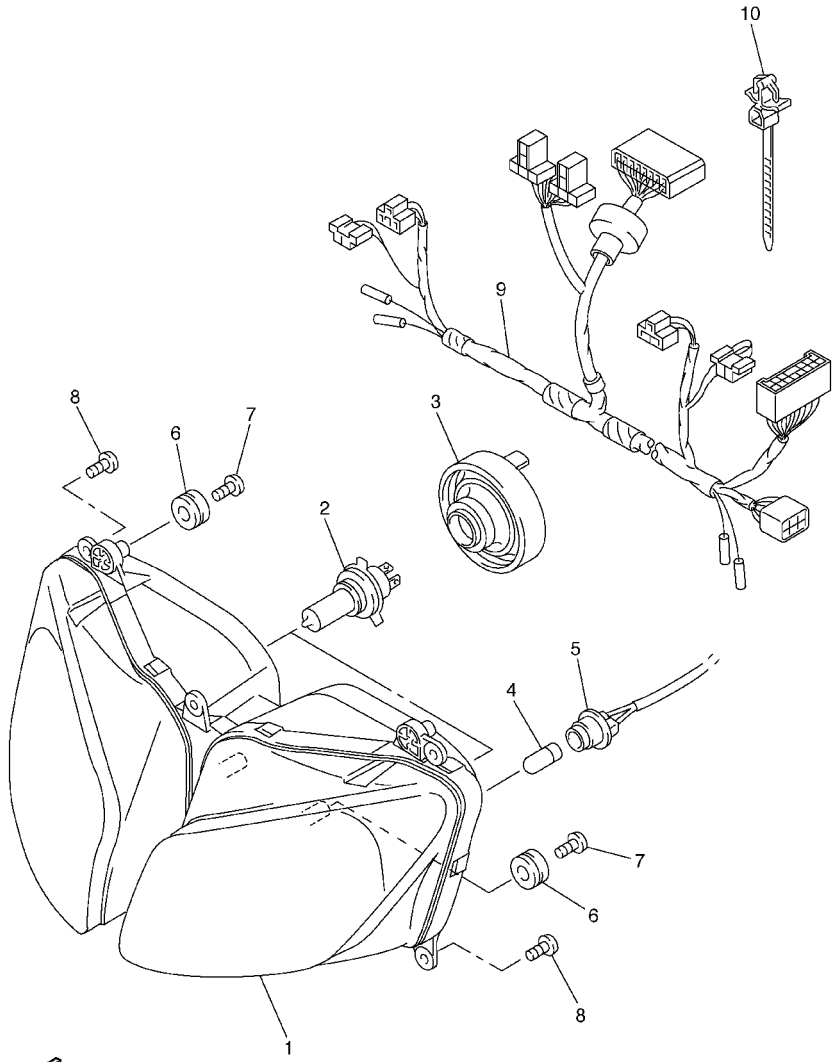

5RT1351-2420

FIG. 42 FARO DELANTERO

REF. NO.	CODIGO NO.	DESCRIPCION	5RT1					OBSERVACION
1	5LV–84310–00	UNIDAD DE FARO DELANTERO COMPL	1					
2	8V0–84314–00	BOMBILLA (12V–60/55W)	2					
3	5LV–84397–00	CUBIERTA DE ENCASTRE	2					
4	4SV–84347–00	BOMBILLA (12V–5W)	2					
5	5RT–84312–00	ENCASTRE	2					
6	90480–14229	TAPON	4					
7	90164–05014	TORNILLO ROSCA HEMBRA	4					
8	97707–50016	TORNILLO ROSCA HEMBRA	5					
9	5RT–84359–00	CABLE DE FARO DELANTERO	1					
10	90464–12089	BRIDA	2					

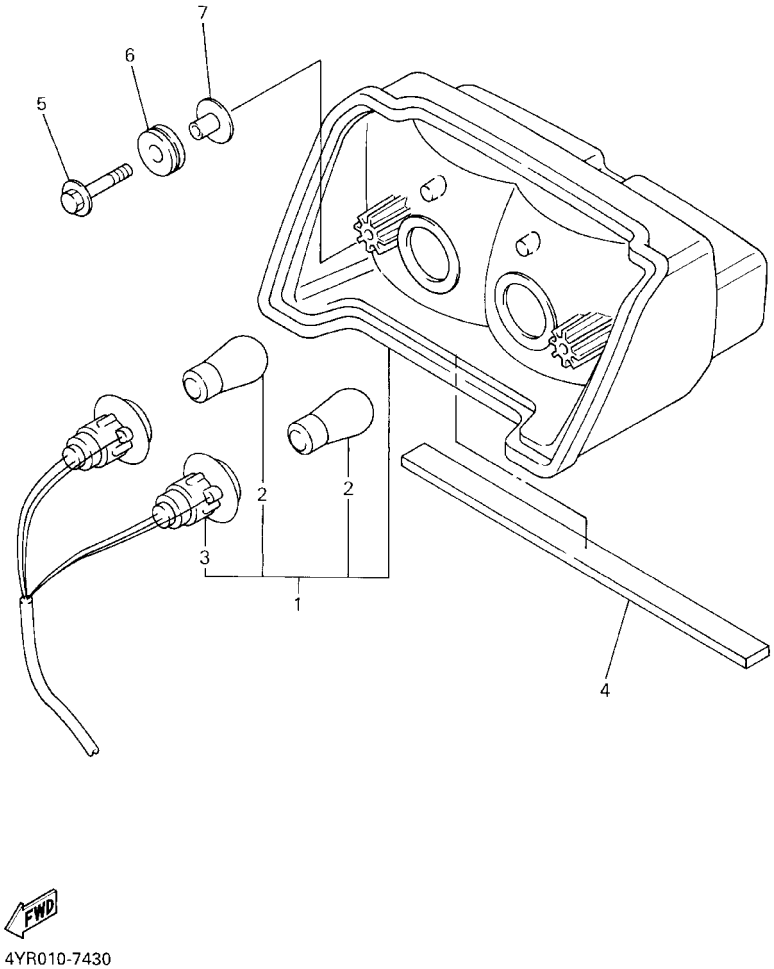

FIG. 43 LUZ DE COLA

REF. NO.	CODIGO NO.	DESCRIPCION	5RT1					OBSERVACION
1	5RT–84710–00	CONJT. FARO TRASERO	1					
2	137–84714–60	.BOMBILLA (12V–21/5W)	2					
3	4SV–84735–00	.CABLE COMPLETA	1					
4	4YR–21649–00	AMORTIGUADOR	1					
5	90119–06118	TORNILLO CON ARANDELA	2					
6	90480–18276	TAPON	2					
7	90387–077M3	COLLAR	2					

FIG. 44 INTERRUPTOR DE MANIJA. PALANCA

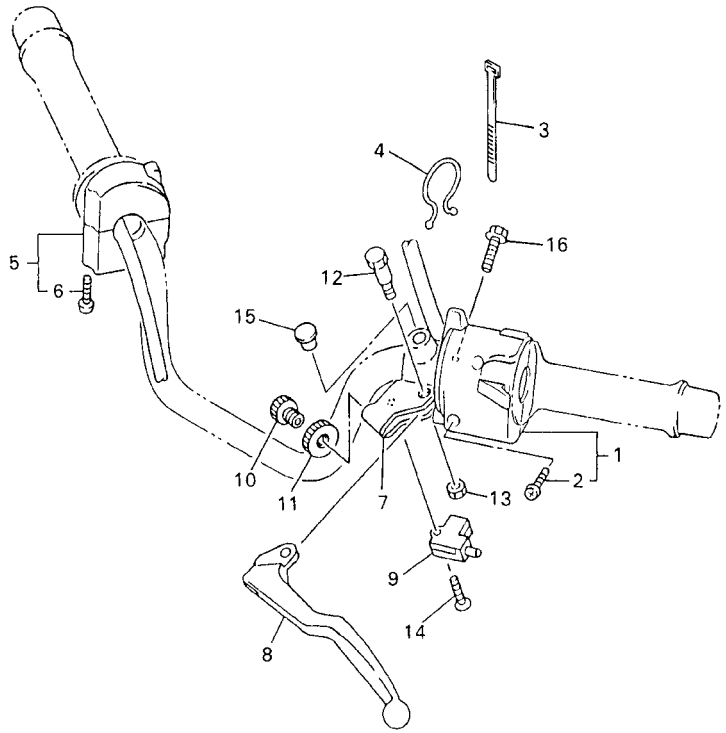

5RT1351-2440

REF. NO.	CODIGO NO.	DESCRIPCION	5RT1					OBSERVACION
1	5RT–83969–00	INTERRUPTOR DE MANIJA 5	1					
2	98507–05025	.TORNILLO DE CABEZA CON PLANA	2					
3	90465–10098	BRIDA	1					
4	90464–23041	BRIDA	1					
5	5RT–83963–00	INTERRUPTOR DE MANIJA 3	1					
6	98507–05045	.TORNILLO DE CABEZA CON PLANA	2					
7	3YX–82911–01	SOPORTE DE LEVA 1	1					
8	3YX–83912–00	PALANCA 1	1					
9	3YX–82917–00	INTERRUPTOR	1					
10	90123–08096	PERNO	1					
11	90179–08148	TUERCA	1					
12	3YX–83945–00	PERNO DE PALANCA	1					
13	95607–06100	TUERCA AUTOBLOCANTE	1					
14	98707–03020	TORNILLO DE CABEZA PLANA	1					
15	90338–09012	TAPON	1					
16	95027–06020	PERNO, DE BRIDA	1					

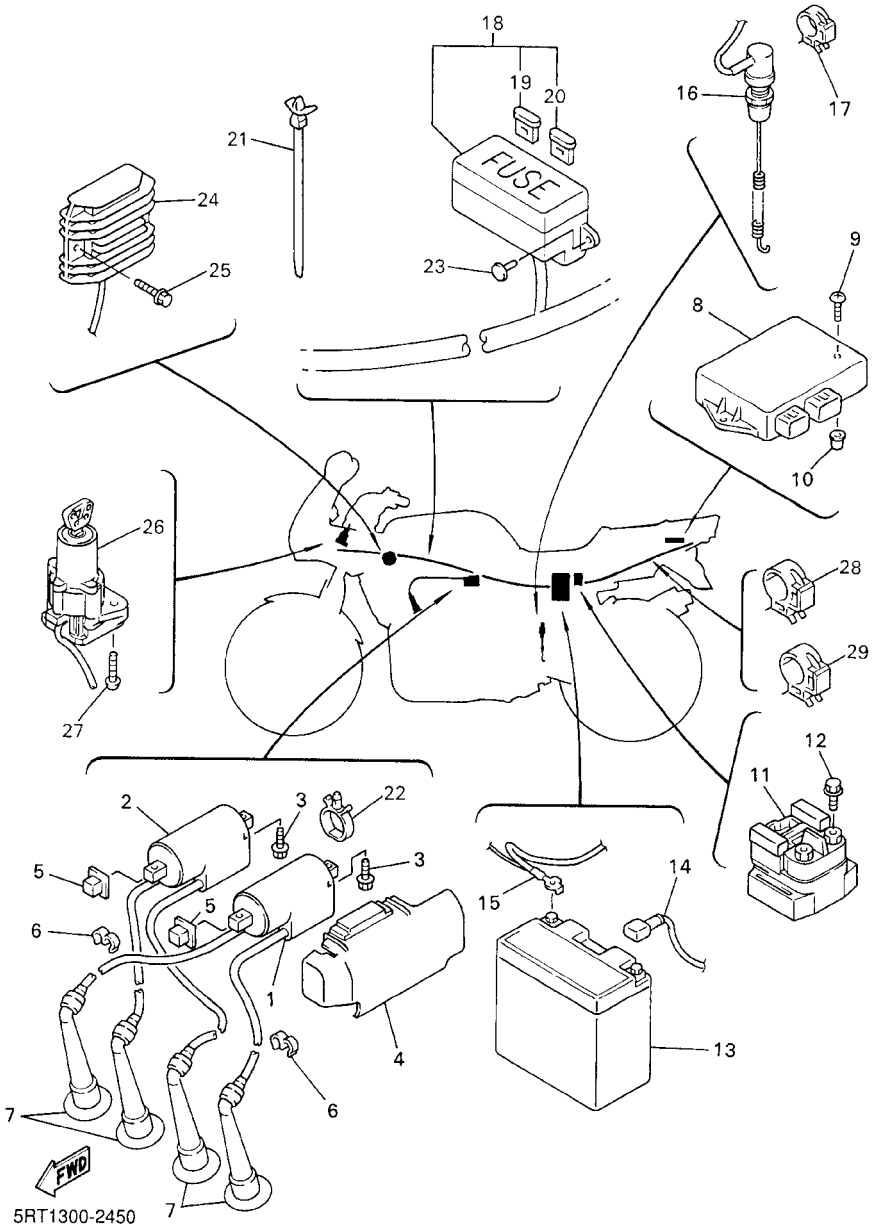

FIG. 45 EQUIPO ELECTRICO 1

REF. NO.	CODIGO NO.	DESCRIPCION	5RT1					OBSERVACION
1	5DM–82310–00	BOBINA DE ENCENDIDO COMPLETA	1					
2	5DM–82320–00	BOBINA DE ENCENDIDO COMPLETA	1					
3	95807–06020	TUERCA DE REBORDE	2					
4	5DM–82314–00	CUBIERTA BOBINA ENCENDIDO	1					
5	4U8–82317–00	AMORTIGUADOR BOBINA ENCENDIDO	2					
6	90464–60067	BRIDA	2					
7	5DM–82370–00	TAPON DE BUJIA COMPLT	4					
8	5DM–82305–01	UNIDAD DE ENCENDIDO COMPLETA	1					
9	97707–60016	TORNILLO ROSCA HEMBRA	2					
10	90338–08226	TAPON	2					
11	4YR–81940–00	CONJUNTO ARRANCADOR RELEVO	1					
12	95027–06008	PERNO, DE BRIDA	2					
13	4TX–82100–01	BATERIA COMPLETA (GT12B–4)	1					
14	4YR–82115–01	CABLE CONDUCTOR POSITIVO	1					
15	4YR–82116–00	CABLE CONDUCTOR NEGATIVO	1					
16	5RT–82530–00	INTERRUPTOR DE PARADA COMPLETO	1					
17	90464–08189	BRIDA	1					
18	5RT–82590–00	CONJUNTO DE CABLES	1					
19	2GV–82151–00	.FUSIBLE (20A–BL)	3					
20	42X–82151–00	.FUSIBLE (10A–BL)	5					
21	90464–12036	BRIDA	1					
22	90464–24230	BRIDA	1					
23	90269–06063	REMACHE	2					
24	5RT–81960–00	RECTIFICADOR Y REGULADOR	1					
25	95807–06020	TUERCA DE REBORDE	2					
26	5RT–82501–00	LLAVE DE IGNICION COMPLT	1					
27	90109–080G5	PERNO	2					

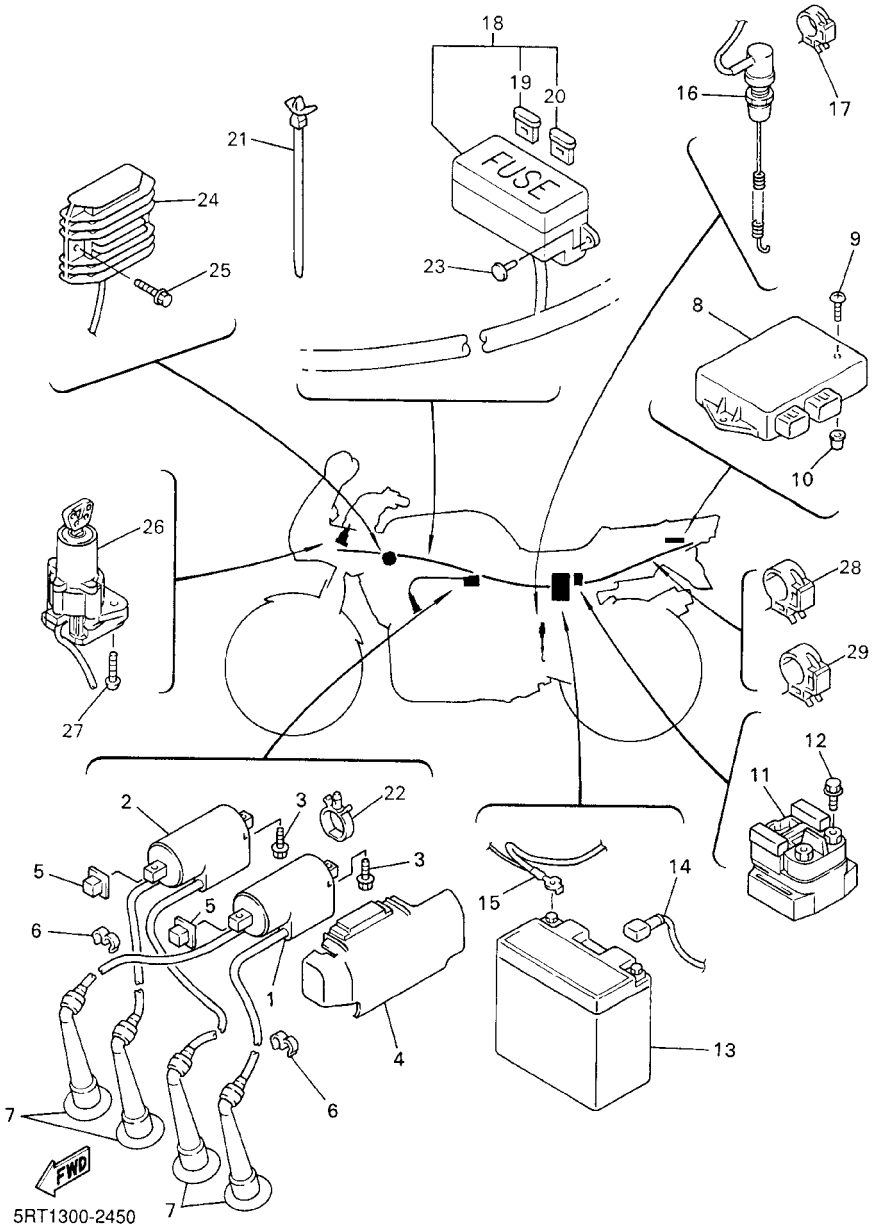

FIG. 45 EQUIPO ELECTRICO 1

REF. NO.	CODIGO NO.	DESCRIPCION	5RT1					OBSERVACION
28	90464–15192	BRIDA	1					
29	90464–20191	BRIDA	1					

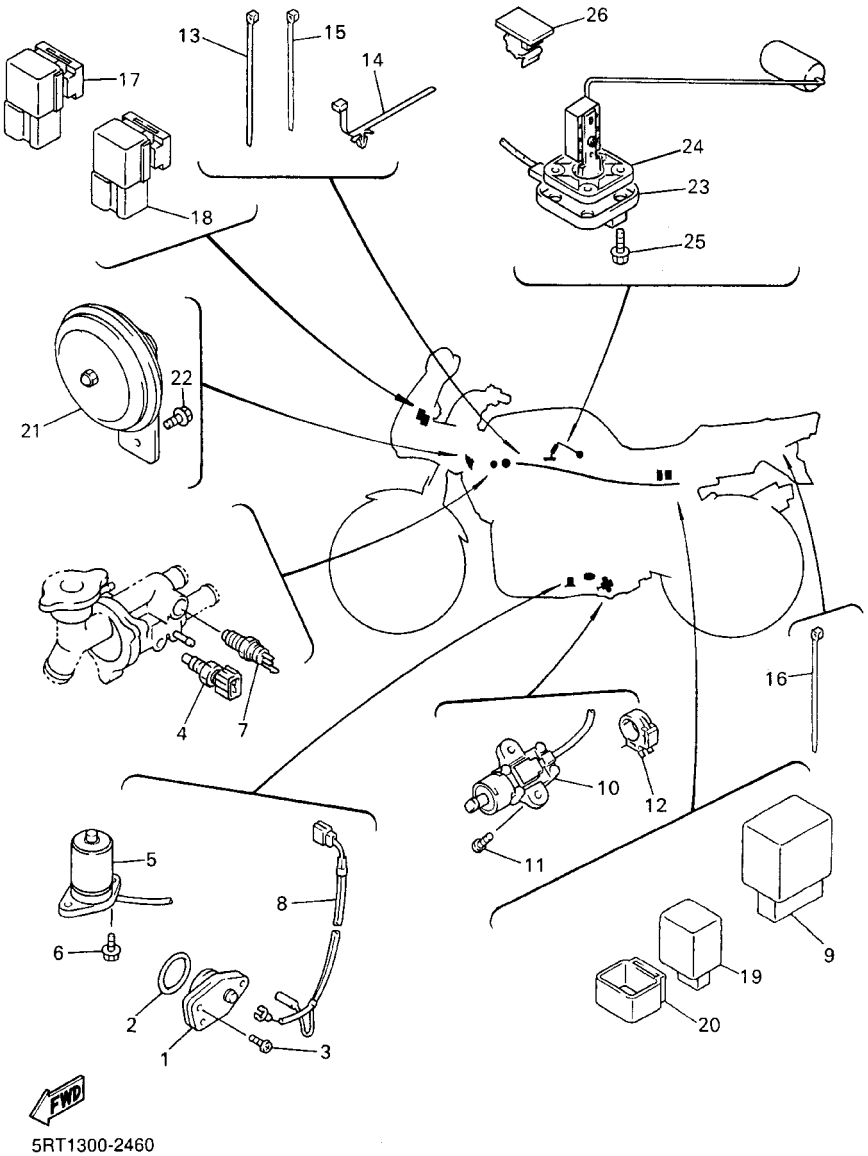

FIG. 46 EQUIPO ELECTRICO 2

REF. NO.	CODIGO NO.	DESCRIPCION	5RT1					OBSERVACION
1	1AE–82540–00	INTERRUPTOR NEUTRAL COMPL	1					
2	93210–29196	ANILLO O	1					
3	98507–06016	TORNILLO DE CABEZA CON PLANA	2					
4	5JJ–83591–00	UNIDAD TERMOSTATO	1					
5	4JH–85720–01	MEDIDOR DE NIVEL DE ACEITE	1					
6	95027–06016	PERNO, DE BRIDA	2					
7	3LN–82560–01	INTER. DE TERMO	1					
8	5RT–82541–00	CABLE CONDUCTOR	1					
9	5KP–81950–00	RELE COMPLETO	1					
10	5RT–82566–90	INTERRUPTOR	1					
11	90157–05079	TORNILLO CABEZA CONICA PLANA	2					
12	90464–08189	BRIDA	1					
13	90464–16061	BRIDA	1					
14	90464–20213	BRIDA	1					
15	90465–10098	BRIDA	1					
16	90465–10098	BRIDA	1					
17	5JJ–81950–10	RELE COMPLETO	1					
18	5JJ–81950–20	RELE COMPLETO	1					
19	4VR–83350–00	RELE DE DESTELLADOR COMPL.	1					
20	4VR–8338V–00	AMORTIGUADOR	1					
21	3BN–83371–00	BOCINA	1					
22	95807–06010	TUERCA DE REBORDE	1					
23	5RT–85752–00	UNIDAD TRANSM MED.COMBUST.	1					
24	5G3–85753–00	EMPAQUE DE UNIDAD TRANSMISORA	1					
25	90119–05071	TORNILLO CON ARANDELA	4					
26	90464–25160	BRIDA	1					

INDICE NUMERICO

CODIGO NO.	REF. NO.
5DM–W0041–50	E – 10
4BP–W0042–50	E – 15
4SV–W0045–00	E – 5
3TJ–W0046–00	E – 8
3GM–W0047–10	E – 5
3MA–W0047–10	E – 5
51L–W0047–00	E – 8
1J3–W0048–00	E – 5
51L–W0048–00	E – 8
4SV–W0057–00	E – 5
4SV–W0057–10	E – 5
51L–W0057–00	E – 8
2TV–W2470–00	E – 3
4HM–W2585–00	E – 10
5DM–W2587–00	E – 10
5RT–Y1242–00	B – 8
5RT–Y2410–10–01	D – 15
5RT–Y2410–10–02	D – 15
5RT–Y2410–10–03	D – 15
5DM–11101–00	B – 2
4KM–1111G–00	B – 2
4YR–1111M–00	B – 2
5DM–11133–10	B – 2
5RT–11145–00	C – 7
4JH–11165–00	C – 6
4YR–11166–00	C – 7
5DM–11181–00	B – 2
4YR–11191–00	B – 2
4YR–11193–00	B – 2
214–11198–01	B – 13
5DM–11311–00	B – 3
5DM–11351–00	B – 3
5DM–11411–01	B – 4
1WG–11416–00	B – 4
1WG–11416–10	B – 4
1WG–11416–20	B – 4
1WG–11416–30	B – 4
1WG–11416–40	B – 4
1WG–11416–50	B – 4
4JH–11603–00	B – 4
5DM–11631–00	B – 4
4JH–11633–00	B – 4
5DM–11650–00	B – 4
4JH–11654–00	B – 4
1WG–11656–00	B – 4
1WG–11656–10	B – 4
1WG–11656–20	B – 4
1WG–11656–30	B – 4

CODIGO NO.	REF. NO.
5DM–12111–00	B – 5
4TV–12113–00	B – 5
1WG–12116–00	B – 5
3TJ–12117–00	B – 5
1HX–12118–00	B – 5
4TV–12119–00	B – 5
5DM–12121–00	B – 5
3FV–12153–09	B – 5
3FV–12153–10	B – 5
1HX–12168–A0	B – 5
1HX–12168–F0	B – 5
1HX–12168–H1	B – 5
1HX–12168–K1	B – 5
1HX–12168–M1	B – 5
1HX–12168–R1	B – 5
1HX–12168–U1	B – 5
1HX–12168–W1	B – 5
1HX–12168–Y1	B – 5
1HX–12168–00	B – 5
1HX–12168–20	B – 5
1HX–12168–40	B – 5
1HX–12168–60	B – 5
1HX–12168–80	B – 5
1HX–12169–E0	B – 6
1HX–12169–G0	B – 6
1HX–12169–J0	B – 6
1HX–12169–L0	B – 6
1HX–12169–N0	B – 6
1HX–12169–T0	B – 6
1HX–12169–11	B – 5
1HX–12169–31	B – 5
1HX–12169–50	B – 5
1HX–12169–70	B – 5
1HX–12169–90	B – 6
5DM–12171–00	B – 7
4YR–12176–00	B – 7
5DM–12181–00	B – 7
5DM–12210–00	B – 7
4HM–12213–00	B – 7
4YR–12241–00	B – 7
4YR–12251–00	B – 7
4YR–12252–00	B – 7
5DM–1240J–00	B – 10
5DM–12405–01	B – 10
1AE–12410–00	B – 9
4YR–12417–00	B – 9
5DM–1243A–00	B – 10
5DM–1243E–00	B – 10

CODIGO NO.	REF. NO.
1UF–12435–00	B – 11
1WG–12439–00	B – 8
4YR–12446–00	B – 8
5RT–12461–00	B – 10
22W–12462–00	B – 9
5LV–12465–00	B – 11
5RT–12467–00	B – 11
5DM–12476–01	B – 10
5DM–12481–00	B – 8
5DM–12482–00	B – 8
4YR–12483–00	B – 8
4YR–12484–00	B – 8
5DM–12485–01	B – 10
4YR–12498–00	B – 10
5DM–12551–00	B – 10
5DM–12552–00	B – 11
4YR–12576–00	B – 8
4YR–12577–00	B – 8
4YR–12578–00	B – 8
4YR–12579–00	B – 9
5DM–12588–00	B – 10
4YR–12589–00	B – 10
5DM–12589–00	B – 10
1AE–12591–01	B – 9
5RT–13161–00	B – 13
1WG–13310–00	B – 12
1WG–13316–00	B – 12
1WG–13329–00	B – 12
4JH–13330–00	B – 12
1WG–13336–00	B – 12
4H7–13411–02	B – 12
3TJ–13412–00	B – 12
4TV–13414–00	B – 13
4YR–13417–00	B – 13
5DM–13440–00	B – 13
5DM–13470–00	B – 13
4JH–13473–00	B – 13
4G0–13490–01	B – 13
16G–13569–00	B – 14
5DM–13586–01	B – 14
5DM–13596–01	B – 14
5RT–13907–00	E – 2
5DM–1410A–00	C – 2
5DM–14103–00	C – 3
5MP–14105–00	C – 2
4SV–14107–10	C – 2
5DM–14113–00	C – 2
5DM–14141–40	C – 2

CODIGO NO.	REF. NO.
4KM–14142–12	C – 2
36Y–14147–00	C – 4
5DM–14148–00	C – 3
4XV–14149–50	C – 3
5DM–14149–00	C – 3
127–14186–00	C – 2
12R–14191–00	C – 3
4KM–14194–00	C – 2
4HM–14216–00	C – 3
4KM–14216–00	C – 2
1HX–14231–26	C – 2
3G2–14231–00	C – 2
3G2–14231–23	C – 2
4HM–14239–00	C – 4
5DM–14251–00	C – 3
5DM–14261–00	C – 2
4KG–14285–00	C – 3
5DM–14291–10	C – 3
5DM–14293–00	E – 2
5DM–14294–00	E – 2
4NK–14327–00	C – 3
5DM–14348–00	C – 3
5DM–14348–10	C – 4
5DM–14349–00	C – 3
5DM–14396–00	C – 3
5DM–14396–10	C – 3
4YR–14411–00	B – 14
5DM–14412–00	B – 14
4YR–14417–00	B – 15
4YR–14418–00	B – 15
31A–14419–00	B – 14
4YR–14421–01	B – 14
4YR–1443E–00	B – 14
31A–14435–00	B – 14
4YR–14451–01	B – 14
3GM–14452–00	B – 14
4BR–14452–00	B – 14
5DM–14453–00	B – 14
5DM–14476–00	B – 14
5DM–14477–00	B – 14
5DM–14561–00	C – 2
583–14561–00	C – 2
1FN–14565–00	C – 2
5DM–14565–00	C – 3
5RT–14602–00	C – 5
3YF–14613–01	C – 5
5RT–14710–00	C – 5
3XW–14714–00	C – 5

CODIGO NO.	REF. NO.
5DM–1490J–00	C – 2
3EN–1490K–00	C – 4
5RT–14900–00	C – 2
5RT–14901–00	C – 2
5RT–14902–00	C – 2
5RT–14903–00	C – 2
5RT–14904–00	C – 2
5DM–14919–00	C – 4
5DM–14933–00	C – 2
5DM–14935–00	C – 3
5DM–14940–00	C – 2
5DM–14985–00	C – 3
5DM–14987–00	C – 4
5DM–14987–10	C – 4
1KT–14994–00	C – 3
3EN–14997–00	C – 3
5DM–15100–02	C – 6
5RT–15105–00	C – 7
11H–15138–00	C – 6
26H–15138–00	C – 6
4JH–15138–00	C – 6
36Y–15189–00	C – 6
4H7–15361–00	C – 6
3F9–15362–00	C – 8
4JH–15381–00	C – 7
5DM–15411–00	C – 8
4YR–15415–00	C – 8
1L9–15417–00	C – 8
4YR–15421–00	C – 8
4YR–15431–00	C – 8
3HE–15451–10	C – 8
4TV–15461–00	C – 8
4TV–15462–00	C – 8
3HE–15467–10	C – 8
3HE–15512–00	C – 10
4JH–15515–00	C – 10
3HE–15517–00	C – 10
3TJ–15521–00	C – 10
5RT–15521–00	C – 10
3HE–15524–00	C – 10
3HE–15590–02	C – 10
4JH–16150–00	C – 11
1WG–16154–00	C – 11
1WG–16164–00	C – 12
1WG–16181–00	C – 12
1WG–16304–00	C – 11
3JD–16321–00	C – 11
4JH–16321–00	C – 11

CODIGO NO.	REF. NO.
1LX–16324–00	C – 11
3JD–16331–00	C – 11
4JH–16340–00	C – 11
132–16346–00	C – 11
4JH–16351–00	C – 11
4JH–16356–00	C – 11
4JH–16357–00	C – 11
5DM–16371–10	C – 11
3JD–16383–00	C – 11
4TV–17121–00	C – 13
4JH–17131–00	C – 13
4TV–17151–00	C – 13
4TV–17161–00	C – 13
4JH–17211–00	C – 13
4JH–17221–00	C – 13
4JH–17231–00	C – 13
4JH–17241–00	C – 13
4TV–17251–00	C – 13
4TV–17261–00	C – 13
4JH–17411–00	C – 13
4TV–17417–00	C – 13
4TV–17421–00	C – 13
278–17425–00	C – 14
4G0–17433–01	C – 14
4TV–17460–00	C – 13
5DM–18101–00	D – 2
1WG–18110–01	D – 2
22N–18113–00	E – 15
5EB–18113–00	D – 2
2GV–18115–00	D – 2
1HX–18127–00	C – 15
3LN–18130–00	D – 2
5RT–18140–00	C – 15
2H9–18154–00	D – 2
4JH–18511–00	C – 15
4JH–18512–00	C – 15
4JH–18513–00	C – 15
4JH–18531–01	C – 15
4JH–18535–00	C – 15
1WG–18536–00	C – 15
5RT–18540–00	C – 15
4UN–18542–00	C – 15
1WG–18562–00	C – 15
4UN–18566–00	C – 15
5RT–21110–00	D – 3
5DM–21147–01	D – 3
4YR–2117E–00	D – 5
4YR–21245–00	D – 3

INDICE NUMERICO

CODIGO NO.	REF. NO.
1JK–21268–00	E – 6
5RT–21295–00	D – 7
5DM–21296–00	D – 4
4HM–21318–00	D – 3
5DM–21346–00	D – 4
3SX–2135F–00	D – 3
4YR–2137Y–01	D – 4
4YR–21376–00	E – 3
5DM–21400–00	D – 3
5DM–2143A–00	D – 7
4DN–2144G–00	E – 12
4X7–2149Y–00	B – 14
3MA–21511–21–PC	D – 5
3MA–21511–21–PF	D – 5
3MA–21511–21–4B	D – 5
5DM–2153A–00	D – 15
3FY–21575–01	D – 4
	E – 2
4YR–21611–01	D – 5
5DM–21621–00	D – 5
5DM–2163A–10–P4	D – 6
5DM–2163A–10–P5	D – 6
5DM–2163A–10–4B	D – 6
5DM–2163E–10–P4	D – 6
5DM–2163E–10–P5	D – 6
5DM–2163E–10–4B	D – 6
4G0–21639–00	D – 5
4YR–21639–00	D – 6
4HM–21647–00	B – 14
4YR–21649–00	F – 10
4YR–21651–00–P6	D – 5
4YR–21651–00–P7	D – 6
4YR–21651–00–4B	D – 6
4SV–21654–01	D – 3
4SV–21654–11	D – 3
4YR–21691–10	D – 5
4YR–21711–00	D – 8
5DM–2172W–00	D – 8
4YR–21721–00	D – 8
5RT–2173E–00	D – 6
5RT–2173E–10	D – 6
5RT–2173E–20	D – 6
5RT–2173F–00	D – 6
5RT–2173F–10	D – 6
5RT–2173F–20	D – 6
1AA–21815–00	D – 8
4YR–21871–00	D – 8
1AA–21874–00	D – 8

CODIGO NO.	REF. NO.
5RT–22110–00	D – 9
22W–22129–00	D – 3
4SE–22129–00	D – 3
47X–22129–00	D – 9
4YR–22141–00	D – 9
4YR–22151–00	D – 10
4KM–2217A–00	D – 9
2KT–2217M–00	D – 9
5RT–22184–00	D – 9
5DM–22210–00	D – 11
2YK–22216–00	D – 11
5LV–22311–00	D – 9
5DM–23102–20	D – 13
5DM–23103–20	D – 13
4YR–23110–00	D – 13
4JH–23111–00	D – 13
	D – 14
5EL–23118–00	D – 13
	D – 14
4KM–23123–01	D – 14
4FM–23125–40	D – 13
5DM–23126–20	D – 13
5DM–23136–20	D – 13
5DM–23141–10	D – 13
	D – 14
4EB–23144–00	D – 13
	D – 14
4EB–23145–00	D – 13
36Y–23146–10	D – 13
2GH–23149–00	D – 13
	D – 14
3EN–23149–50	D – 13
	D – 14
26H–23156–00	D – 13
	D – 14
509–23158–L0	D – 13
	D – 14
5DM–23170–10	D – 13
4YR–23171–00	D – 13
4YR–23173–00	D – 13
	D – 14
278–23181–50	D – 13
	D – 14
43F–23188–10	D – 13
	D – 14
4PU–2331G–00	D – 14
4YR–23317–00	E – 5
5DM–23340–00	D – 14

CODIGO NO.	REF. NO.
5RT–23389–00	D – 12
5DM–2341B–00	F – 8
1W1–23416–00	D – 12
26H–23418–01	D – 12
4YR–23435–10	D – 12
4H7–23441–00–98	D – 12
4YR–23442–10	D – 12
3FV–23462–00	D – 12
341–23469–00	D – 12
4YR–2414G–00	E – 2
2GH–24181–00	D – 15
4YR–24181–00	D – 15
5DM–24181–00	D – 4
2GH–24183–00	D – 15
4YR–24183–01	E – 2
2GH–24186–00	D – 15
31A–24188–01	D – 3
	D – 4
4YR–24188–10	E – 2
5DM–24191–00	D – 15
5DM–24216–01	D – 3
5DM–24217–00	E – 2
5RT–24244–00	D – 15
5DM–24311–00	D – 15
5DM–24312–00	E – 2
5DM–24398–00	E – 2
3YJ–24481–00	D – 4
2VN–24500–01	D – 15
4X8–24512–00	D – 15
5DM–24515–00	C – 3
3AJ–24523–00	D – 15
3AJ–24534–00	D – 15
1FK–24560–10	E – 2
1FK–24566–00	E – 2
5JJ–24602–00	E – 2
4YR–2471A–01	E – 3
5RT–2472F–00	D – 6
5RT–24723–00	E – 3
4HM–24728–00	E – 3
5DM–24730–10	E – 3
5DM–24731–10	E – 3
5DM–24732–00	D – 7
5DM–24732–10	D – 7
4BP–24737–00	D – 6
1T4–24741–00	E – 3
4YR–24754–00	E – 3
5DM–24773–10–P3	D – 6
5DM–24773–10–P4	D – 6

CODIGO NO.	REF. NO.
5DM–24773–10–4B	D – 7
4YR–2478E–00	E – 3
4YR–2478X–01	E – 3
4BP–24780–00	E – 3
4BP–24792–00	E – 3
4HM–25168–00–98	E – 4
4YR–2517G–00	F – 8
3MA–25181–01	E – 4
4JH–25338–00–98	E – 6
4FM–25364–00	E – 6
4FM–25366–00	E – 6
1AE–25371–01	E – 6
4YR–25381–00	E – 7
4YR–25388–00	E – 6
2GH–25389–00	E – 6
5MT–25398–00	E – 4
	E – 6
5MT–25398–10	E – 4
	E – 6
5MT–25398–20	E – 4
	E – 6
5DM–25448–10	E – 6
5DM–2580T–00	E – 5
5DM–2580U–00	E – 5
4HM–2580W–00	E – 8
5RT–2581K–00	E – 15
4HM–2581T–11	E – 5
4YR–25819–00	E – 7
4BP–2582A–00	E – 15
4JH–2582W–00	E – 8
47X–25827–00	E – 8
47X–25827–10	E – 8
4BP–2583V–00	E – 15
4BP–2585F–00	E – 15
3LN–2585G–00	E – 15
2KF–25852–50	E – 15
360–25854–01	E – 15
4HM–25854–00	E – 10
2GU–25855–00	E – 15
4HM–25867–00	E – 10
5DM–25872–00	E – 10
5DM–25873–00	E – 10
4YR–25874–00	E – 10
3EN–25875–01	E – 10
2R8–25876–01	E – 10
4FM–25876–00	E – 15
42H–25885–01	E – 10
4BH–25886–01	F – 2

CODIGO NO.	REF. NO.
3FV–2589F–00	E – 10
31A–25894–01	E – 15
5DM–25895–00	E – 15
4SV–25919–00	E – 5
51L–25919–00	E – 8
4FL–25924–00	E – 8
4SV–25924–00	E – 5
3GM–25925–00	E – 5
5RT–26110–00	E – 9
4YR–26240–01	E – 9
4YR–26241–01	E – 9
4YR–26246–00	E – 9
5LV–26280–00	F – 3
4KG–26281–00	E – 9
3XW–26282–01	E – 9
5LV–26290–00	F – 3
4SV–26298–00	F – 4
5RT–26302–00	E – 9
5RT–26330–00	E – 9
5RT–26335–00	E – 9
5DM–27111–10	E – 13
1A0–27114–00	E – 14
3YX–27211–01	E – 15
4BP–27222–00	E – 15
4YR–27311–00	E – 12
36Y–27352–00	E – 12
5DM–27410–00	E – 12
3YX–27413–00	E – 13
4BP–27413–00	E – 12
2H7–27414–00	E – 13
4SV–27414–00	E – 12
5DM–27420–00	E – 12
5RT–27430–00	E – 12
5RT–27431–00	E – 12
4SV–27435–00	E – 12
1HX–27437–00	E – 13
5RT–27440–00	E – 13
5RT–27441–00	E – 13
4YR–27442–00	E – 12
4YR–27443–00	E – 12
4YR–28100–00	D – 7
1HX–28227–00	D – 5
5RT–2835G–00–P0	F – 3
5RT–2835G–00–P1	F – 3
5RT–2835G–00–P2	F – 3
5RT–28356–00	F – 3
5RT–2836A–00	F – 3
5LV–2836B–00	F – 3

CODIGO NO.	REF. NO.
5RT–2836E–00	F – 3
5RT–2836K–00	F – 3
5RT–2836L–00	F – 3
42N–28376–00	D – 6
5RT–28381–00	F – 3
5RT–28391–00	F – 3
5RT–28391–10	F – 3
5RT–28391–20	F – 3
5RT–28392–00	F – 3
5RT–28392–10	F – 3
5RT–28392–20	F – 3
5RT–81410–00	F – 5
5RT–81450–00	F – 5
3AJ–81809–00	F – 6
4YR–81815–00	F – 6
4XV–8182A–00	F – 6
3HE–81826–00	F – 6
3HE–81840–00	F – 6
11H–81844–00	F – 6
1FK–81847–00	F – 6
4YR–81890–00	F – 6
4YR–81940–00	F – 12
5JJ–81950–10	F – 14
5JJ–81950–20	F – 14
5KP–81950–00	F – 14
5RT–81960–00	F – 12
4TX–82100–01	F – 12
4YR–82115–01	F – 12
4YR–82116–00	F – 12
26L–82131–00	D – 5
2GV–82151–00	F – 12
42X–82151–00	F – 12
5DM–82305–01	F – 12
5DM–82310–00	F – 12
5DM–82314–00	F – 12
4U8–82317–00	F – 12
5DM–82320–00	F – 12
5H0–8235Y–M0	D – 5
4YR–82361–00	E – 11
5DM–82370–00	F – 12
5RT–82501–00	F – 12
5RT–82530–00	F – 12
1AE–82540–00	F – 14
5RT–82541–00	F – 14
3LN–82560–01	F – 14
5RT–82566–90	F – 14
5RT–82590–00	F – 12
1UA–82591–00	B – 11

INDICE NUMERICO

CODIGO NO.	REF. NO.
1UA–82591–00	E – 10
3MA–82591–00	E – 2
3YX–82911–01	F – 11
3YX–82917–00	F – 11
5DM–8331L–00	F – 7
5DM–83310–00	F – 7
306–83311–40	F – 7
5DM–83320–00	F – 7
4JH–83330–00	F – 7
4JH–83332–00	F – 7
4JH–83340–00	F – 7
4JH–83342–00	F – 7
4FM–83345–00	F – 7
4VR–83350–00	F – 14
4FM–83369–00	F – 7
3BN–83371–00	F – 14
4VR–8338V–00	F – 14
4YR–83517–00	F – 8
4YR–83517–10	F – 8
5RT–8353E–00	F – 8
4YR–83534–00	F – 8
5RT–83570–00	F – 8
4YR–83572–00	F – 8
5JJ–83591–00	F – 14
4YR–8362Y–00	F – 8
4YR–83755–02	F – 8
3YX–83912–00	F – 11
5EB–83922–01	E – 10
3YX–83945–00	F – 11
5RT–83963–00	F – 11
5RT–83969–00	F – 11
3FV–83980–00	E – 10
5LV–84310–00	F – 9
5RT–84312–00	F – 9
8V0–84314–00	F – 9
4SV–84347–00	F – 9
5RT–84359–00	F – 9
5LV–84397–00	F – 9
5RT–84710–00	F – 10
137–84714–60	F – 10
4SV–84735–00	F – 10
3Y6–85130–02	D – 7
4JH–85720–01	F – 14
4YR–85750–01	F – 8
5RT–85752–00	F – 14
5G3–85753–00	F – 14
4SV–85885–00	C – 3
5RT–87278–00	F – 3

CODIGO NO.	REF. NO.
4XV–90445–10	C – 3
90101–08662	E – 12
90101–10659	D – 9
90101–12673	D – 9
90105–060A0	F – 6
90105–060A2	C – 6
90105–06024	C – 6
90105–063A6	C – 6
90105–063A7	C – 6
90105–063A8	C – 6
90105–06384	B – 2
90105–066A5	B – 8
90105–07342	B – 7
90105–08016	D – 7
90105–083A9	E – 6
90105–085A5	D – 3
90105–08630	C – 6
90105–10445	C – 10
90105–10561	E – 8
90105–10638	E – 5
90105–10727	D – 9
90105–10731	D – 3
90105–12584	F – 5
90109–061F3	D – 3
90109–063F1	D – 6
90109–063F7	C – 15
90109–065A8	B – 7
90109–066F0	B – 2
90109–080G5	F – 12
90109–083G4	E – 5
	E – 8
90109–087F1	E – 12
	E – 13
90109–101E6	E – 13
90109–103A9	E – 12
90109–10554	D – 11
90110–05112	E – 2
90110–06130	B – 12
90110–06200	F – 3
90110–06225	B – 12
90110–06226	D – 12
90110–08071	F – 3
90113–08021	C – 11
90116–06475	B – 2
90116–09615	C – 6
90116–09616	C – 6
90116–10575	E – 6
90119–05071	F – 14

CODIGO NO.	REF. NO.
90119–06044	D – 5
90119–06074	D – 8
90119–06097	D – 5
90119–06117	D – 9
90119–06118	D – 10
	F – 10
90119–06213	D – 15
90123–08096	F – 11
90149–05321	C – 15
90149–06008	D – 15
90149–06298	D – 8
90149–06308	E – 3
90150–05023	F – 3
90153–06029	B – 8
90154–05013	F – 3
90154–05059	D – 6
90154–06075	B – 15
90157–05065	C – 11
90157–05079	E – 12
	E – 13
	F – 14
90159–06085	E – 15
90159–06092	C – 11
90164–05014	F – 9
90170–06228	D – 2
90170–18221	C – 11
90176–22081	D – 12
90179–05523	F – 3
90179–06403	B – 10
90179–06635	E – 3
90179–06668	C – 5
90179–07652	B – 4
90179–08148	F – 11
90179–08179	C – 11
90179–09612	B – 2
90179–18020	C – 14
90179–25033	D – 12
90183–05024	B – 11
90183–05074	F – 3
90183–06023	D – 5
	E – 15
90185–10091	E – 14
90185–16127	D – 9
90185–18167	E – 7
90201–05027	F – 5
90201–06043	D – 4
90201–06071	B – 10
90201–06380	F – 8

CODIGO NO.	REF. NO.
90201–06557	D – 5
90201–08083	E – 15
90201–081R9	E – 12
90201–087G2	E – 12
90201–087K3	C – 6
90201–090P4	B – 2
90201–094G1	D – 7
90201–100A1	E – 13
90201–101J1	D – 9
	D – 11
90201–10118	E – 10
	E – 15
90201–107K6	C – 10
90201–113K2	B – 12
90201–121H0	F – 5
90201–126A7	D – 9
90201–160F6	D – 9
90201–180P5	E – 7
90201–200P6	E – 7
90201–20276	C – 14
90201–220T0	D – 12
90201–237K5	C – 6
90202–05193	D – 15
90202–06170	F – 3
90202–24190	D – 12
90202–26142	D – 12
90206–08051	D – 3
90206–17084	E – 12
90209–22191	C – 13
90209–27336	C – 13
90215–18225	C – 11
90215–21022	C – 13
90240–08124	E – 15
90267–40054	B – 14
90269–06063	D – 4
	F – 12
90269–07076	D – 3
	D – 6
90280–03047	F – 5
90280–05048	C – 10
90338–08174	B – 2
90338–08226	D – 5
	F – 12
90338–09012	E – 10
	F – 11
90338–12192	D – 5
90340–08014	C – 8
90340–12112	B – 2

CODIGO NO.	REF. NO.
90340–14132	B – 13
90387–06022	D – 10
90387–061W9	D – 15
90387–06299	D – 4
	D – 15
90387–064H8	E – 13
90387–065J6	D – 5
90387–06681	D – 5
90387–07391	B – 10
	E – 2
90387–077M3	F – 10
90387–100T8	D – 9
90387–1012G	E – 12
90387–1013M	D – 3
90387–10636	E – 13
90387–126T1	D – 9
90387–127W0	D – 9
90387–177V5	E – 4
90387–2004D	E – 7
90387–2004E	E – 6
90387–2004F	E – 6
90387–203U5	E – 7
90387–212R3	C – 11
90387–2504A	C – 13
90401–10106	B – 13
90401–10159	E – 10
	E – 15
90401–10160	E – 10
90401–20170	B – 13
90413–07007	B – 15
90430–06014	B – 8
90430–06166	C – 6
90430–10188	B – 13
90445–081K8	D – 8
90445–09353	D – 8
90445–104F3	E – 2
90445–11147	B – 14
90445–116E9	C – 7
90445–11637	B – 15
90445–170K9	E – 14
90445–197J2	E – 12
90446–17346	E – 15
90450–22017	B – 10
90450–32015	B – 8
	B – 10
90450–38040	B – 9
90450–47001	B – 14
90450–58090	B – 14

CODIGO NO.	REF. NO.
90462–10182	C – 8
90462–16238	C – 7
90464–08189	F – 12
	F – 14
90464–12036	F – 12
90464–12089	F – 9
90464–13073	D – 4
90464–15157	D – 8
90464–15192	E – 9
	F – 13
90464–16025	F – 7
90464–16061	F – 14
90464–20003	F – 7
90464–20191	F – 13
90464–20213	F – 14
90464–23041	F – 11
90464–24230	F – 12
90464–25160	F – 14
90464–30252	D – 3
90464–44109	D – 15
90464–60067	F – 12
90464–62085	F – 7
90465–06289	C – 7
90465–10098	F – 11
	F – 14
90465–10306	B – 13
90465–10307	C – 6
90465–10308	C – 6
90465–10393	C – 7
90465–14310	F – 8
90467–06194	B – 10
90467–08003	D – 8
90467–08075	D – 8
90467–08092	B – 10
90467–09006	E – 2
90467–10038	C – 7
90467–10039	B – 14
90467–10041	B – 14
90467–11032	E – 2
90467–11044	D – 15
90467–11175	E – 2
90467–13073	E – 2
90467–13123	E – 2
90467–14015	C – 7
90467–14057	E – 15
90467–15168	B – 10
90467–22100	B – 9
90467–23190	B – 9

INDICE NUMERICO

CODIGO NO.	REF. NO.
90467–26189	B – 10
90468–12069	B – 4
90468–15139	E – 9
90480–10542	B – 10
90480–12320	D – 8
90480–14052	D – 5
90480–14229	F – 9
90480–14323	D – 5
90480–14585	F – 8
90480–15363	B – 10
90480–16616	D – 5
90480–18276	F – 10
90501–06022	C – 15
90501–12743	E – 13
90501–22001	C – 11
90506–11488	C – 11
90506–20006	E – 12
90506–20377	E – 15
90506–23509	E – 13
90506–40508	E – 13
90508–23007	C – 15
90508–32007	D – 2
90560–12211	D – 2
90560–17358	E – 4
91314–05010	E – 2
91314–05014	B – 2
91314–06012	B – 8
91314–06025	C – 8
91314–06035	B – 8
	C – 8
91314–06040	C – 8
91314–06045	C – 8
91314–06050	C – 8
91314–06065	B – 8
91314–08030	D – 12
91314–08040	D – 14
91316–06020	E – 10
91317–05035	E – 9
91317–06010	B – 8
	B – 13
91317–06012	C – 7
91317–06020	B – 14
91317–06025	B – 7
	B – 13
91317–06035	E – 9
91317–06110	D – 15
91317–08020	C – 10
91317–08030	D – 12

CODIGO NO.	REF. NO.
91317–10025	D – 14
91401–20012	E – 15
91808–16023	B – 2
92014–06010	B – 10
92014–08020	E – 15
92017–06030	F – 5
92902–04100	E – 10
92902–04600	E – 10
92907–05600	B – 11
	F – 5
92907–06600	D – 15
92907–08200	E – 6
92990–06600	C – 5
93101–29165	B – 4
93101–29166	B – 4
93102–12106	D – 2
93102–23252	E – 4
93102–28022	E – 6
93102–35368	C – 13
93106–40041	E – 6
93109–08058	C – 11
93109–12075	D – 2
93109–17071	D – 9
93210–06422	C – 7
93210–10096	B – 13
93210–12152	C – 6
93210–15414	B – 8
93210–16325	C – 6
93210–17746	B – 8
93210–21190	B – 8
93210–27194	C – 8
93210–29196	F – 14
93210–33133	B – 8
93210–48364	C – 11
93210–49046	B – 9
93305–20509	C – 13
93306–00105	C – 11
93306–20006	C – 10
93306–20314	E – 4
93306–20417	E – 6
93306–20464	C – 13
93306–20644	E – 6
93306–37208	C – 13
93310–345R8	C – 12
93311–42045	C – 14
93315–32516	C – 6
93317–31771	D – 9
93317–41761	D – 9

CODIGO NO.	REF. NO.
93317–42060	D – 9
93320–32403	D – 9
93399–99931	D – 12
93399–99932	D – 12
93440–07149	B – 2
93440–25084	C – 13
93440–30077	C – 13
93440–52014	C – 14
93440–54152	C – 13
93501–04011	E – 13
93505–16006	C – 11
93603–09106	B – 12
93603–17070	B – 12
93612–16254	B – 3
	C – 6
93900–00030	E – 4
	E – 6
94111–1712U	E – 4
94111–1712W	E – 4
94116–1712V	E – 6
94116–1712X	E – 6
94582–01110	E – 6
94591–47130	B – 7
94701–00329	B – 2
94701–00330	B – 2
95024–06012	B – 8
95024–06045	E – 13
95027–06008	F – 12
95027–06010	F – 2
95027–06012	D – 3
95027–06016	F – 14
95027–06020	B – 9
	E – 10
	F – 11
95027–06025	B – 8
	D – 4
	E – 10
95027–06030	B – 9
95027–06040	B – 8
95304–06700	D – 2
95307–06600	F – 8
95307–08600	E – 6
95307–08700	E – 15
95604–06200	E – 13
95606–06100	E – 10
95607–06100	F – 11
95607–08200	E – 6
95607–10100	D – 11

CODIGO NO.	REF. NO.
95607–10200	D – 12
	E – 6
95617–10100	D – 9
95617–12100	D – 9
95707–05500	D – 7
95707–06500	E – 3
	F – 4
	F – 7
95707–08500	D – 3
95707–10500	D – 3
95807–06010	B – 15
	D – 3
	F – 3
	F – 14
95807–06012	D – 5
95807–06016	B – 15
95807–06020	E – 2
	F – 12
95807–06025	B – 10
95814–08025	C – 5
95814–08045	E – 12
95814–10040	E – 13
95814–10080	D – 3
95814–10090	D – 3
95817–06012	B – 10
95817–06090	C – 6
95817–08014	D – 3
95817–08070	C – 6
95817–10170	D – 3
95827–06016	C – 15
97024–06020	D – 2
97027–06030	D – 15
97080–06008	C – 5
97702–40610	F – 7
97707–40018	F – 8
97707–50012	D – 6
97707–50016	F – 9
97707–50120	B – 14
97707–50125	B – 14
97707–50130	B – 14
97707–60016	F – 12
97707–60025	D – 5
97890–05008	C – 3
97890–05016	C – 2
98502–04012	E – 10
98507–03008	D – 15
98507–04008	C – 2
98507–05008	C – 3

CODIGO NO.	REF. NO.
98507–05010	B – 11
	C – 3
98507–05016	F – 5
98507–05025	F – 11
98507–05045	F – 11
98507–06008	E – 12
98507–06010	C – 9
98507–06012	C – 7
98507–06016	F – 14
98507–06020	B – 12
98580–04010	C – 3
98706–04012	E – 10
98707–03020	F – 11
98707–04008	C – 3
99224–00160	D – 15
99241–00100	D – 6
99244–00100	D – 6
99246–00100	D – 6
99530–08012	B – 12
99530–08016	B – 13
	C – 8
99530–12016	C – 6

CODIGO NO.	REF. NO.

CONTENIDO

MOTOR

CULATA DE CILINDRO B2
CILINDRO B3
CIGUENAL. PISTON B4
VALVULA B5
ARBOL DE LEV. CADENA B7
BOMBA DE AGUA B8
RADIADOR. MANGUELA B10
BOMBA DE ACEITE B12
ENFRIADOR DE AIRE B13
ADMISION B14
CARBURADOR C2
DESCARGA C5
CARTER C6
CUBIERTA DE CARTER 1 . . . . . C8
EMBRAG. DEL ARRANQUE C10
EMBRAGUE C11
TRANSMISION C13
LEVA DE CAMBIO. HORQ C15
EJE DE CAMBIO. PEDAL D2

SHASIS

CUADRO D3
GUARDABARRO D5
CUBIERTA LATERAL D8
BRAZO TRASERO D9
SUSPENSION TRASERO D11
DIRECCION D12
HORQUILLA DELANTERA D13
DEPOSITO DE COMBUSTIBLE D15
ASIENTO E3
RUEDA DELANTERA E4
CALIBRE FRENO DELANTERA E5
RUEDA TRASERA E6
CALIBRE FRENO TRASERA E8
MANUBRIO. CABLE E9
CILINDRO MAESTRO DELANTERO E10
SOPORTE. APOYAPIE E12
CILINDRO MAESTRO TRASERO E15
BOVEDA 1 . . . . . F3
GENERADOR F5
MOTOR DE ARRANQUE F6
LUZ DE DESTELLADOR F7
MEDIDOR F8
FARO DELANTERO F9
LUZ DE COLA F10
INTERRUPTOR DE MANIJA. PALANCA F11
EQUIPO ELECTRICO 1 . . . . . F12
EQUIPO ELECTRICO 2 . . . . . F14

INDICE

NUMERICAL INDEX M1