YAMAHA

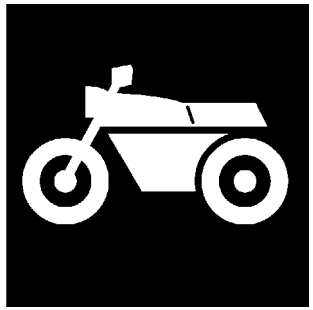

CATALOGO DE REPUESTOS

FZ1-SA (5D01) EUROPE

1F5D0-352S1

(2F5D0-352S1)

YAMAHA GENUINE Parts & Accessories

A2

FZ1-SA
CATALOGO DE REPUESTOS
©2006 por Yamaha Motor Co., Ltd.
1ª edición, octubre 2006
Todos los derechos reservados.
Toda reproducción o uso no autorizado
sin el consentimiento escrito de
Yamaha Motor Co., Ltd.
quedan expresamente prohibidos
Impreso en Japón.

A3

PROLOGO

Este catálogo de repuestos corresponde a las piezas para el o los modelos que figuran en la página de portada. Al formular el pedido de repuestos, se ruega citar este catálogo y especificar correctamente el número y el nombre de las piezas.

1. Las modificaciones y agregados que se hayan realizado después de la edición de este Catálogo de Repuestos, serán anunciados en las Informaciones de Recambios.
   Es recomendable que se hagan las correcciones necesarias en el Catálogo de Repuestos de acuerdo con las Informaciones de Recambios.

2. Abreviaciones
   En este. Catálogo de Repuestos se emplean las siguientes abreviaciones.

   "UR" Usar el número de partes especificado
   "UN" Usar la cantidad necesaria
   "AP" Piezas sustitutivas
   "LM" Fabricación local (Hay que pedir los repuestos en las cercanías)
   "F#" Nº de bastidor (Nº aplicable a la máquina)
   "O/S" Sobredimensionado

3. La cantidad de componentes para el montaje
   - Los componentes, suministrados como conjunto, se describen con un punto (.) que precede al nombre del parte como se indica a continuación.
   - La numeración que aparece a la derecha de cada descripción indica la cantidad de partes por cada unidad de conjunto.

CODIGO Nº	DESCRIPCION	CANT.	OBSERVACIONES
2F5–83310–60	ENSAMBLAJE DE LA LUZ	2	
115–83311–60	.BOMBILLA (6V–18W)	1	

4. Los colores de los componentes se indican como sigue en la columna de "OBSERVACIONES".

CODIGO Nº	DESCRIPCION	CANT.	OBSERVACIONES
2N4–24110–00–X5	COMP. DEL TANQUE	2	MXR
3J1–24240–10	.GRAFICO, DEL TANQUE	1	PARA MXR

5. Debe tenerse en cuenta que las ilustraciones sirven como guia para la búsqueda de los números de partes y no deben usarse para el montaje. Durante el montaje, se recomienda usar el manual de taller correspondiente.

6. EL asterisco (*) antes del número de referencia indica los elementos modificados después de la primera edición.

7. Números de serie

Nº de Serie del motor

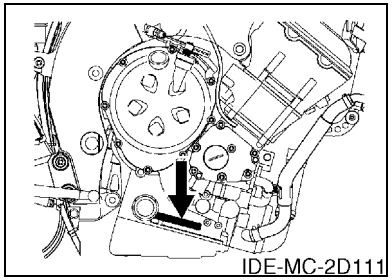

Nº de Serie del bastidor

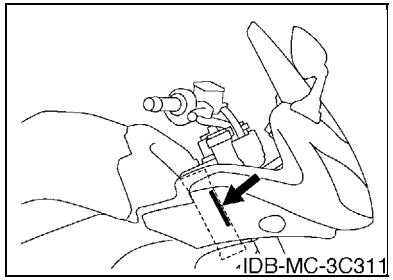

8. Códigos de color aplicables (El símbolo (*) muestra el color de modelo.)

Abreviatura	Nombre de color	Código de color
BNM5(*)	BLUISH GRAY METALLIC 5	1051
DPBMU(*)	DARK PURPLISH BLUE METALLIC U	0996
DRMK(*)	DEEP RED METALLIC K	0918
LGB	LOW GLOSS BLACK	0098
MBL2	MAT BLACK 2	0582
SMX	BLACK METALLIC X	0903

ROTULO DE MODELO

(1) El rótulo llamada “Rótulo de Modelo” está en la ubicación indicada abajo en el (3). Cuando se utilice este catálogo de repuestos, se ruega cotejar entre el “código de modelo–número de código de producción” del catálogo y el “código de modelo–número de código de producción” indicado en el Rótulo de Modelo fijado en el producto correspondiente.

(2) Indicación del “Rótulo de Modelo”

a b ○ xxxx – xxx ● x c	a: Código de tipo de Modelo b: Número de código de Producción c: Tipo de color

○ 4TW1–010 ● A

(3) Ubicación de fijación del Rótulo de Modelo

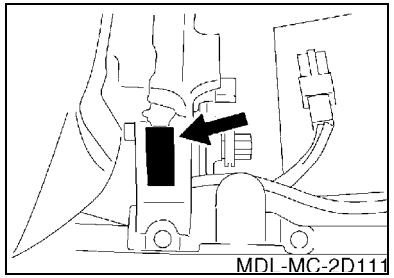

(4) Información de Color

Código de Modelo	Código de tipo de color	Código de color	Nombre de color	Abreviatura
5D01	A	0996	DARK PURPLISH BLUE METALLIC U	DPBMU
	B	1051	BLUISH GRAY METALLIC 5	BNM5
	C	0918	DEEP RED METALLIC K	DRMK

(5) Código de Modelo–Número de código de Producción del Modelo Listado en este Catálogo de Repuestos

Código de Modelo	Número de Código de Producción	País (destino)
5D01	010	EUROPE

CONTENIDO

MOTOR

CULATA DE CILINDRO B2
CILINDRO B4
CIGUENAL & PISTON B5
VALVULA B6
ARBOL DE LEVAS & CADENA B8
BOMBA DE AGUA B9
RADIADOR & MANGUERA B11
BOMBA DE ACEITE B13
FILTRO ACEITE B14
ADMISION B15
ADMISION 2 ..... C2
SYSTEMA DE INDUCCION DE AIRE C4
DESCARGA C5
CARTER C6
CUBIERTA DE CARTER 1 ..... C7
ARRANQUE C9
EMBRAGUE C10
TRANSMISION C12
LEVA DE CAMBIO & HORQUILLA C14
EJE DE CAMBIO & PEDAL C15

SHASIS

CUADRO D2
GUARDABARRO D4
CUBIERTA LATERAL D7
BRAZO TRASERO D8
SUSPENSION TRASERO D10
DIRECCION D11
HORQUILLA DELANTERA D12
DEPOSITO DE COMBUSTIBLE D14
ASIENTO E2
RUEDA DELANTERA E3
CALIBRE FRENO DELANTERA E4
RUEDA TRASERA E5
CALIBRE FRENO TRASERA E7
MANILLAR & CABLE E8
CILINDRO MAESTRO DELANTERO E9
SOPORTE & APOYAPIE E11
CILINDRO MAESTRO TRASERO E14
BOVEDA 1 ..... F2
GENERADOR F4
MOTOR DE ARRANQUE F5
LUZ DE DESTELLADOR F6
MEDIDOR F7
FARO DELANTERO F8
LUZ DE COLA F9
INTERRUPTOR DE MANILLAR&PALANC F10
EQUIPO ELECTRICO 1 ..... F11
EQUIPO ELECTRICO 2 ..... F13
EQUIPO ELECTRICO 3 ..... F15

INDICE

INDICE NUMERICO M1

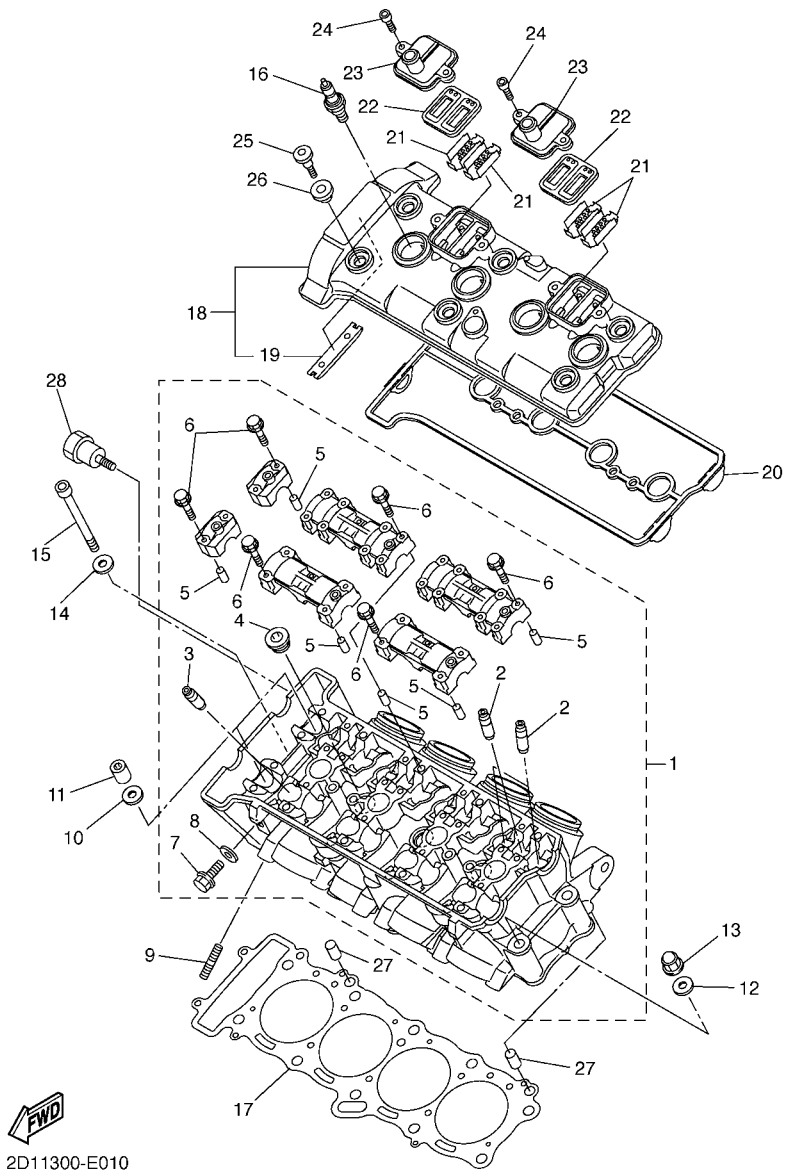

FIG. 1 CULATA DE CILINDRO

REF. Nº	CODIGO Nº	DESCRIPCION	5D01					OBSERVACIONES
1	5VY–11101–20	CULATA DE CILINDRO COMPLETA	1					
2	5VY–11133–10	.GUIA DE VALVULA 1	12					
3	5VY–11134–10	.GUIA DE VALVULA 2	8					
4	90340–18002	.TORNILLO, DE DRENAJE	3					
5	91808–16023	.PASADOR DE CLAVIJA	6					
6	90105–06026	.TORNILLO	28					
7	95024–06012	.PERNO, DE BRIDA	1					
8	90430–06014	.JUNTA	1					
9	95612–08625	TUERCA U	8					
10	90201–10033	ARANDELA PLANA	8					
11	90179–10006	TUERCA	8					
12	90201–10033	ARANDELA PLANA	2					
13	90176–10075	TUERCA CORONA	2					
14	90201–06034	ARANDELA PLANA	2					
15	91314–06105	PERNO	2					
16	94701–00403	BUJIA (NGK CR9EK)	4					
17	2D1–11181–00	JUNTA, DE CULATA 1	1					
18	5VY–11191–02	TAPA CULATA DE CILINDRO 1	1					
19	5BE–12241–00	.TOPE DE GUIA 2	1					
20	5VY–11193–10	EMPAQUE	1					
21	5VY–1482K–00	PLACA	4					
22	5SL–14890–10	VALVULA DE LENGUETA COMPLETA	2					
23	5VY–14899–00	TAPA, DE CAJA	2					
24	90110–06178	TORNILLO ALLEN	4					
25	90109–066F0	PERNO	6					
26	5VY–1111G–00	CASQUILLO DE GOMA	6					
27	99530–10114	PASADOR, DE ESPIGA	2					

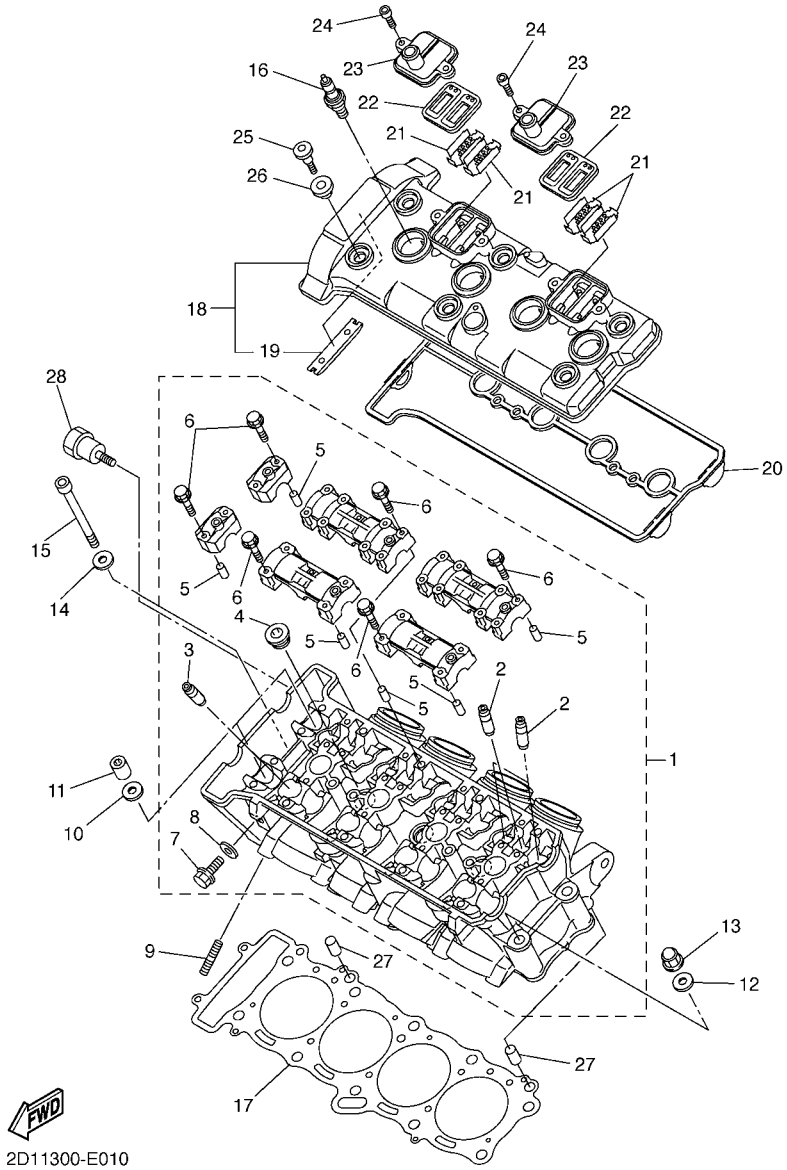

FIG. 1 CULATA DE CILINDRO

REF. Nº	CODIGO Nº	DESCRIPCION	5D01					OBSERVACIONES
28	2D1–11026–00	PERNO	1					

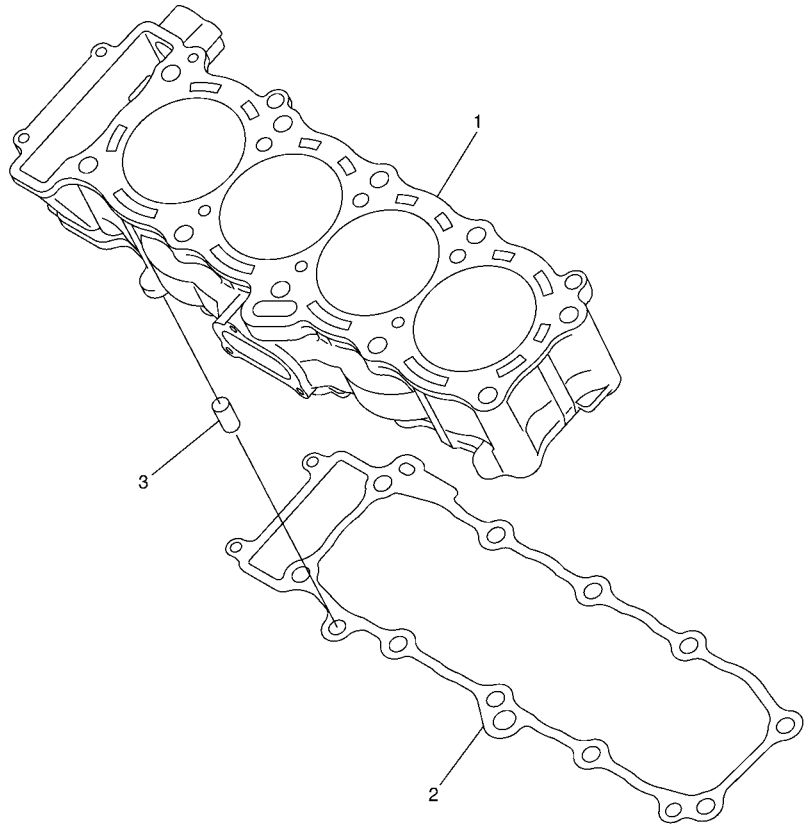

5VY1300-C020

FIG. 2 CILINDRO

REF. Nº	CODIGO Nº	DESCRIPCION	5D01					OBSERVACIONES
1	5VY–11311–10	CILINDRO 1	1					
2	5VY–11351–00	JUNTA, DE CILINDRO	1					
3	99530–10114	PASADOR, DE ESPIGA	2					

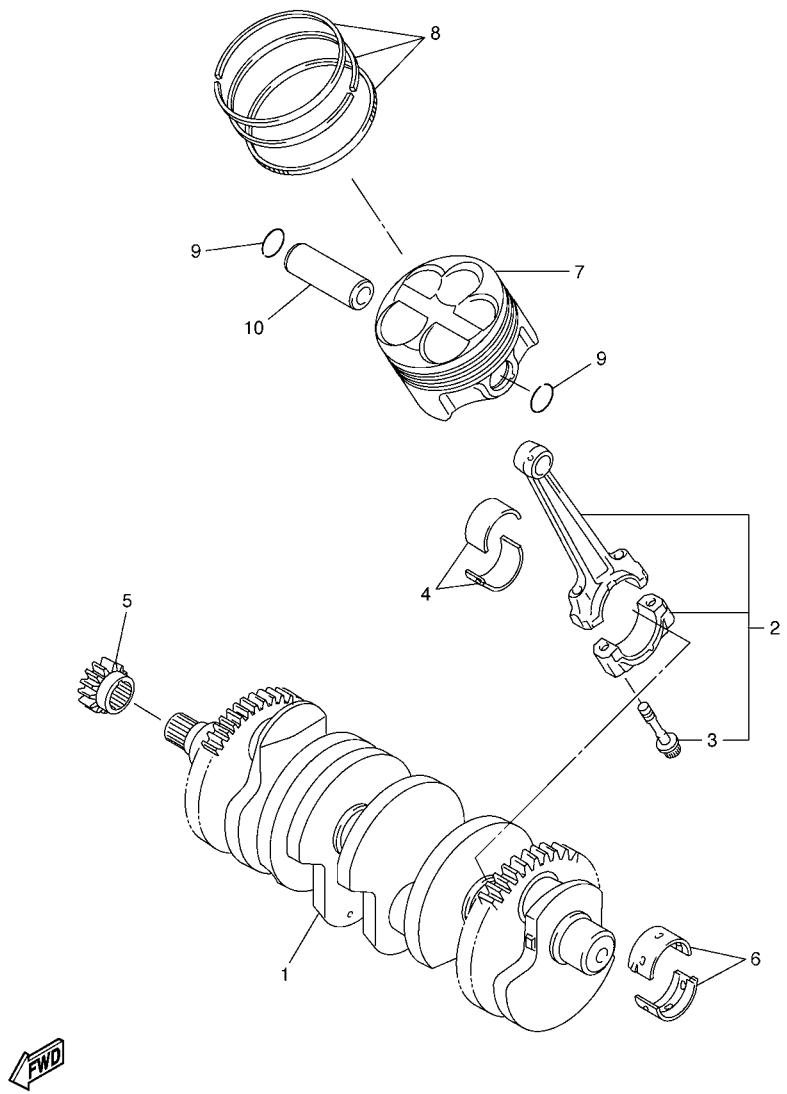

FIG. 3 CIGUENAL & PISTON

REF. Nº	CODIGO Nº	DESCRIPCION	5D01					OBSERVACIONES
1	2D1–11411–00	CIGUENAL	1					
2	4C8–11650–00	BIELA COMPLETA	4					
3	5VY–11654–01	.TORNILLO DE BIELA	2					
4	2D1–11656–00	COJINETE PLANO	8					UR AZUL
	2D1–11656–10	COJINETE PLANO	8					UR NEGRO
	2D1–11656–20	COJINETE PLANO	8					UR MARRON
	2D1–11656–30	COJINETE PLANO	8					UR VERDE
5	5VY–11549–00	CATALINA CADENA DE LEVA	1					
6	5VY–11416–A0	COJINETE PLANO 1	10					UR BLANCO
	5VY–11416–00	COJINETE PLANO 1	10					UR AZUL
	5VY–11416–10	COJINETE PLANO 1	10					UR NEGRO
	5VY–11416–20	COJINETE PLANO 1	10					UR MARRON
	5VY–11416–30	COJINETE PLANO 1	10					UR VERDE
7	5VY–11631–10	PISTON (NORMA)	4					
8	5VY–11603–01	JUEGO DE ANILLOS (NORMA)	4					
9	93450–18157	SEGURO	8					
10	5VY–11633–00	PASADOR, PISTON	4					

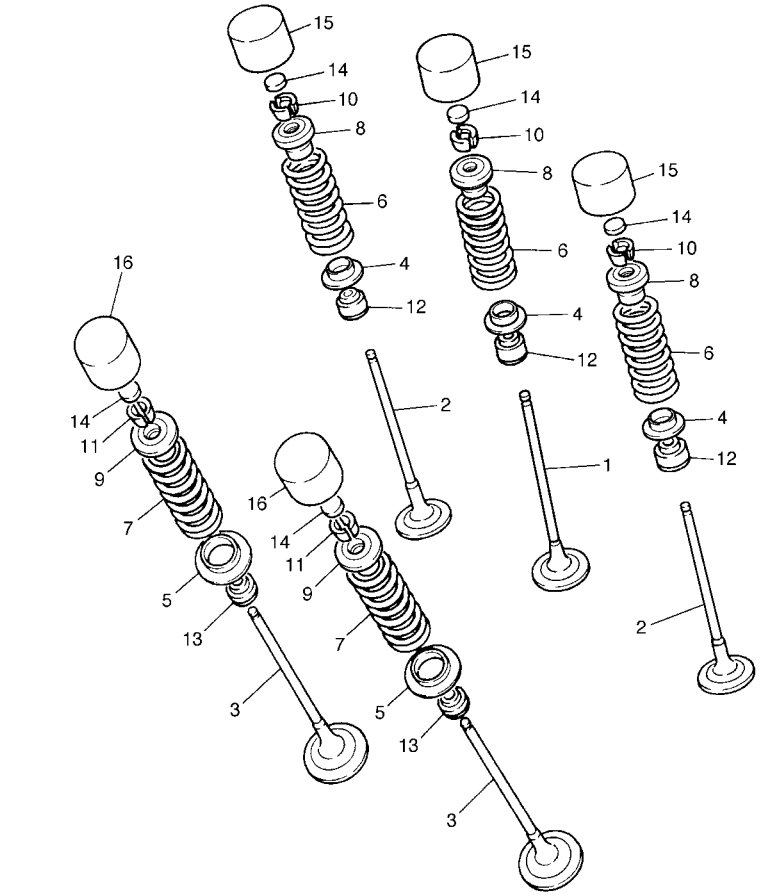

5VY1300-C040

FIG. 4 VALVULA

REF. Nº	CODIGO Nº	DESCRIPCION	5D01					OBSERVACIONES
1	5VY–12111–00	VALVULA DE ADMISION	4					
2	5VY–12112–00	VALVULA, DE ADMISION 2	8					
3	5VY–12121–00	VALVULA DE ESCAPE	8					
4	5NL–12116–00	ASIENTO RESORTE DE VALVULA	12					
5	3GM–12126–00	ASIENTO RESORTE DE VALVULA2	8					
6	2D1–12113–00	RESORTE VALVULA INTERNA	12					
7	2D1–12114–00	RESORTE VALVULA EXTERIOR	8					
8	1HX–12117–00	RETEN RESORTE DE VALVULA	12					
9	1WG–12117–00	RETEN RESORTE DE VALVULA	8					
10	1HX–12118–00	SEGURO DE VALVULA	24					
11	1WG–12118–00	SEGURO DE VALVULA	16					
12	4TV–12119–00	SELLO DE ACEITE VALVULA	12					
13	4SV–12119–00	SELLO DE ACEITE VALVULA	8					
14	1HX–12168–00	COJIN, AJUSTADOR 2 (1.20)	20					UR
	1HX–12168–20	COJIN, AJUSTADOR 2 (1.25)	20					UR
	1HX–12168–40	COJIN, AJUSTADOR 2 (1.30)	20					UR
	1HX–12168–60	COJIN, AJUSTADOR 2 (1.35)	20					UR
	1HX–12168–80	COJIN, AJUSTADOR 2 (1.40)	20					UR
	1HX–12168–A0	COJIN, AJUSTADOR 2 (1.45)	20					UR
	1HX–12168–F0	COJIN, AJUSTADOR 2 (1.50)	20					UR
	1HX–12168–H1	COJIN, AJUSTADOR 2 (1.55)	20					UR
	1HX–12168–K1	COJIN, AJUSTADOR 2 (1.60)	20					UR
	1HX–12168–M1	COJIN, AJUSTADOR 2 (1.65)	20					UR
	1HX–12168–R1	COJIN, AJUSTADOR 2 (1.70)	20					UR
	1HX–12168–U1	COJIN, AJUSTADOR 2 (1.75)	20					UR
	1HX–12168–W1	COJIN, AJUSTADOR 2 (1.80)	20					UR
	1HX–12168–Y1	COJIN, AJUSTADOR 2 (1.85)	20					UR

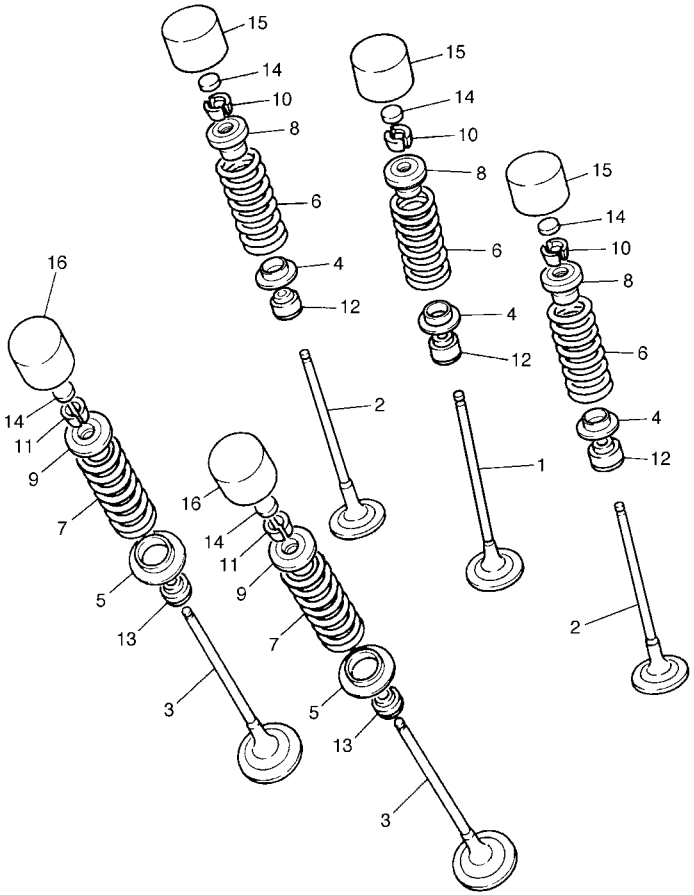

5VY1300-C040

FIG. 4 VALVULA

REF. Nº	CODIGO Nº	DESCRIPCION	5D01					OBSERVACIONES
14	1HX–12169–11	COJIN, AJUSTADOR 2 (1.90)	20					UR
	1HX–12169–31	COJIN, AJUSTADOR 2 (1.95)	20					UR
	1HX–12169–50	COJIN, AJUSTADOR 2 (2.00)	20					UR
	1HX–12169–70	COJIN, AJUSTADOR 2 (2.05)	20					UR
	1HX–12169–90	COJIN, AJUSTADOR 2 (2.10)	20					UR
	1HX–12169–E0	COJIN, AJUSTADOR 2 (2.15)	20					UR
	1HX–12169–G0	COJIN, AJUSTADOR 2 (2.20)	20					UR
	1HX–12169–J0	COJIN, AJUSTADOR 2 (2.25)	20					UR
	1HX–12169–L0	COJIN, AJUSTADOR 2 (2.30)	20					UR
	1HX–12169–N0	COJIN, AJUSTADOR 2 (2.35)	20					UR
	1HX–12169–T0	COJIN, AJUSTADOR 2 (2.40)	20					UR
15	3LN–12153–20	LEVANTADOR DE VALVULA	12					UR AZUL
	3LN–12153–30	LEVANTADOR DE VALVULA	12					UR ROJO
	3LN–12153–09	LEVANTADOR DE VALVULA (O/S)	12					UR VERDE
16	3FV–12153–20	LEVANTADOR DE VALVULA	8					UR AZUL
	3FV–12153–30	LEVANTADOR DE VALVULA	8					UR ROJO
	3FV–12153–09	LEVANTADOR DE VALVULA (O/S)	8					UR VERDE

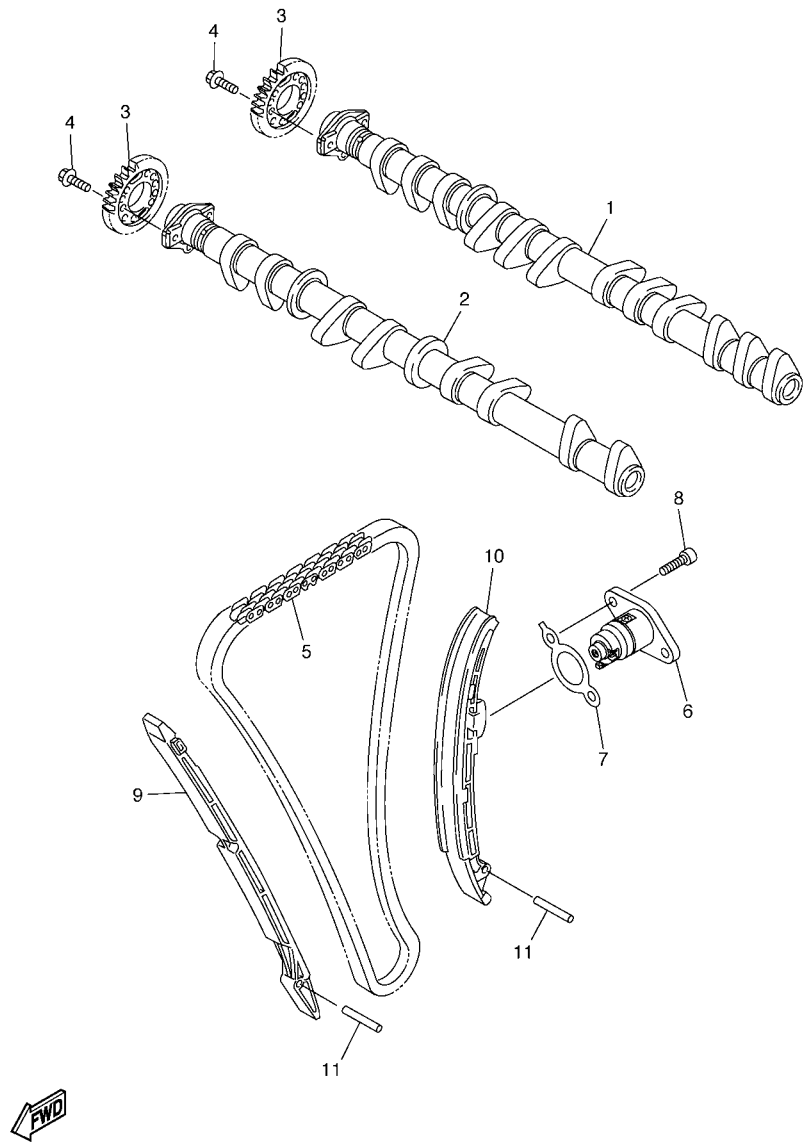

5VYE300-E050

FIG. 5 ARBOL DE LEVAS & CADENA

REF. Nº	CODIGO Nº	DESCRIPCION	5D01					OBSERVACIONES
1	2D1–12170–00	ARBOL DE LEVAS COMPLETO 1	1					
2	2D1–12180–00	ARBOL DE LEVAS COMPLETO 2	1					
3	5VY–12176–00	CATALINA DE CADENA	2					
4	90105–07006	TORNILLO	4					
5	94591–60122	CADENA	1					
6	5VY–12210–20	TENSOR CADENA DE LEVA	1					
7	2D1–12213–00	EMPAQUE DE CAJA TENSOR	1					
8	91314–06020	PERNO	2					
9	5VY–12251–00	AMORTIGUADOR CADENA 1	1					
10	5VY–12252–00	AMORTIGUADOR CADENA 2	1					
11	93607–44002	PASADOR DE CLAVIJA	2					

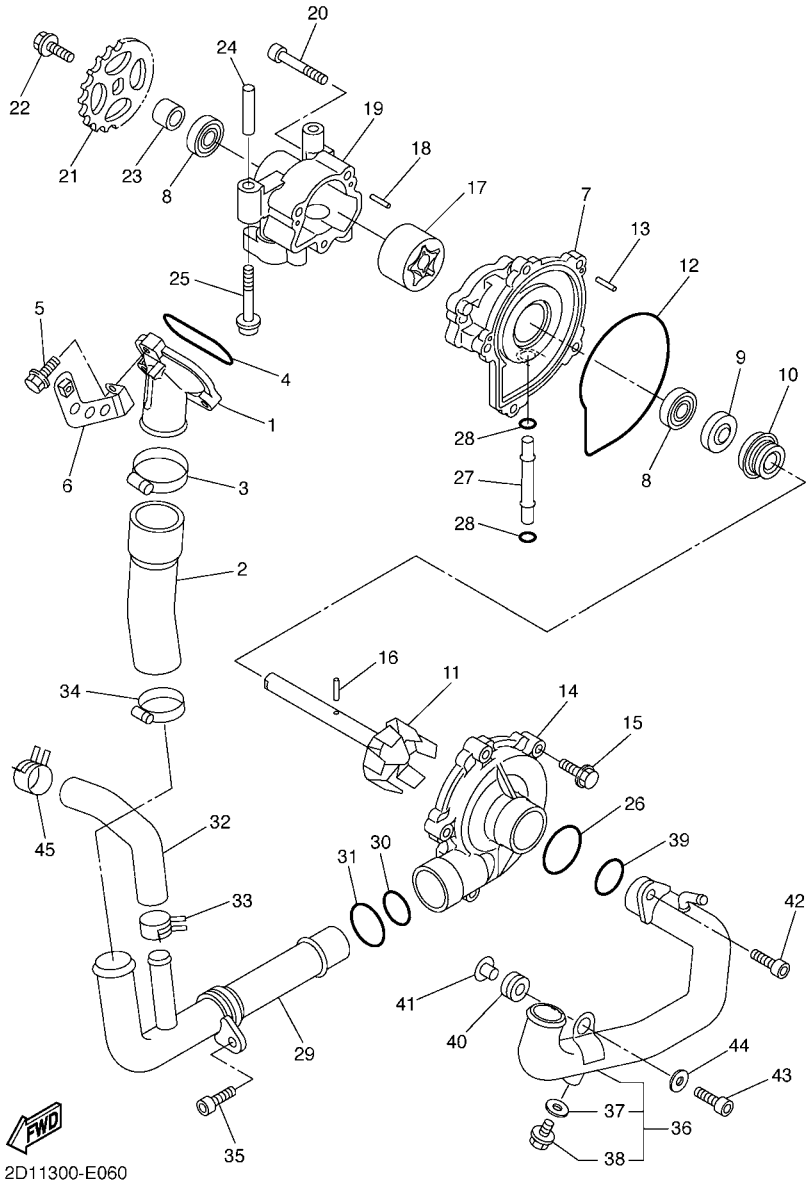

FIG. 6 BOMBA DE AGUA

REF. Nº	CODIGO Nº	DESCRIPCION	5D01					OBSERVACIONES
1	5VY–12469–00	CONDUCTO	1					
2	5VY–12576–00	MANGUERA 1	1					
3	90450–38040	BRIDA, MANGUERA	1					
4	93210–47675	ANILLO O	1					
5	95024–06025	PERNO, DE BRIDA	3					
6	2D1–12637–00	SOPORTE 1	1					
7	5VY–12421–01	CAJA DE BOMBA DE AGUA	1					
8	93306–00106	COJINETE	2					
9	93102–12372	SELLO ACEITE	1					
10	11H–12438–10	SELLO MECANICO	1					
11	5VY–12450–11	EJE IMPULSOR COMPLETO	1					
12	4XV–12439–00	ANILLO O	1					
13	93603–12007	PASADOR DE CLAVIJA	2					
14	5VY–12422–00	CUBIERTA DE CAJA	1					
15	90105–06065	TORNILLO	5					
16	93603–17070	PASADOR DE CLAVIJA	1					
17	5VY–13310–10	ROTOR COMPLETO 1	1					
18	93603–12007	PASADOR DE CLAVIJA	2					
19	5VY–13336–00	CAJA DE ROTOR	1					
20	91312–06040	TORNILLO	3					
21	5VY–13355–00	CATALINA IMPULSADA	1					
22	90105–06066	TORNILLO	1					
23	5VY–12456–10	ARANDELA	1					
24	91808–30031	PASADOR DE CLAVIJA	1					
25	90110–06167	TORNILLO ALLEN	2					
26	93210–357A2	ANILLO O	1					
27	4XV–12485–00	TUBO 5	1					

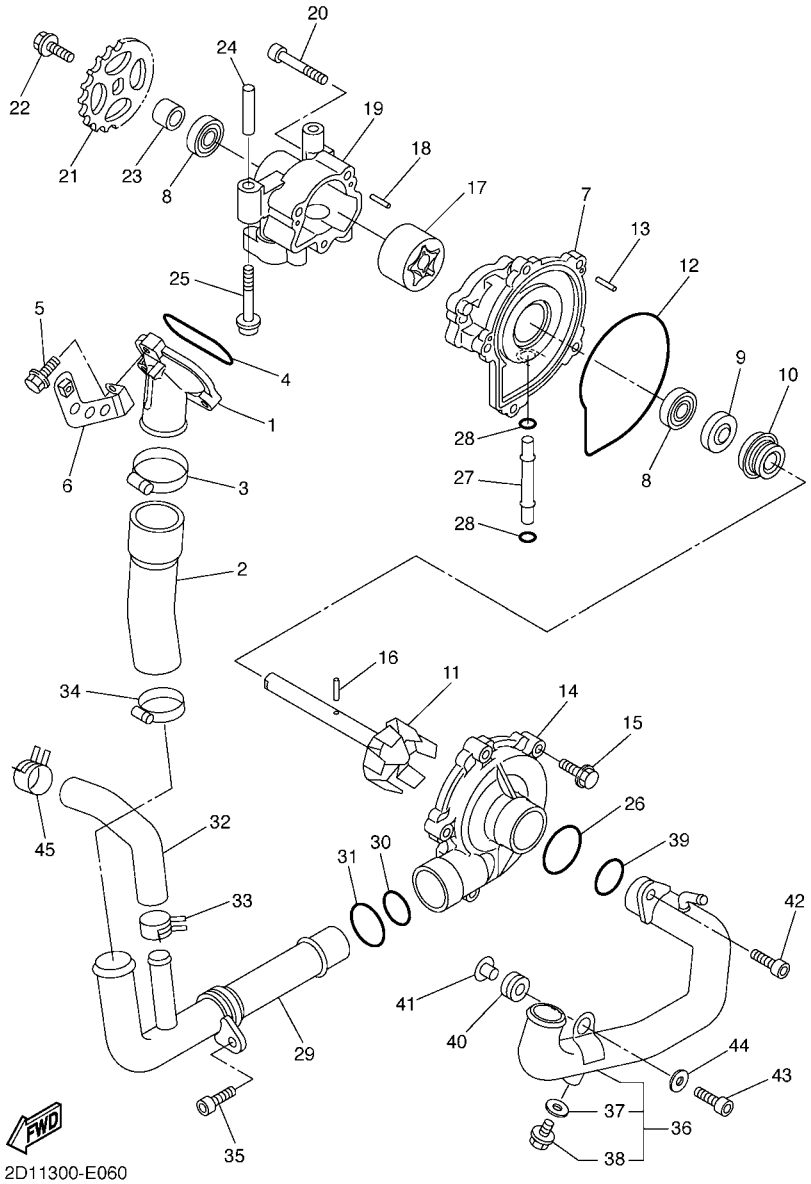

FIG. 6 BOMBA DE AGUA

REF. Nº	CODIGO Nº	DESCRIPCION	5D01					OBSERVACIONES
28	93210–06667	ANILLO O	2					
29	5VY–12481–10	TUBO 1	1					
30	93210–235A1	ANILLO O	1					
31	93210–27370	ANILLO O	1					
32	5VY–12588–00	MANGUERA 5	1					
33	90467–200A0	PRESILLA	1					
34	90450–32001	BRIDA, MANGUERA	1					
35	90110–06161	TORNILLO ALLEN	1					
36	2D1–12484–00	TUBO 4	1					
37	90430–06014	.JUNTA	1					
38	90153–06002	.TORNILLO HEXAGONAL	1					
39	93210–235A1	ANILLO O	1					
40	90480–12010	TAPON	1					
41	90387–06112	ESPACIADOR	1					
42	90110–06161	TORNILLO ALLEN	1					
43	90110–06174	TORNILLO ALLEN	1					
44	90201–06079	ARANDELA PLANA	1					
45	90467–200A0	PRESILLA	1					

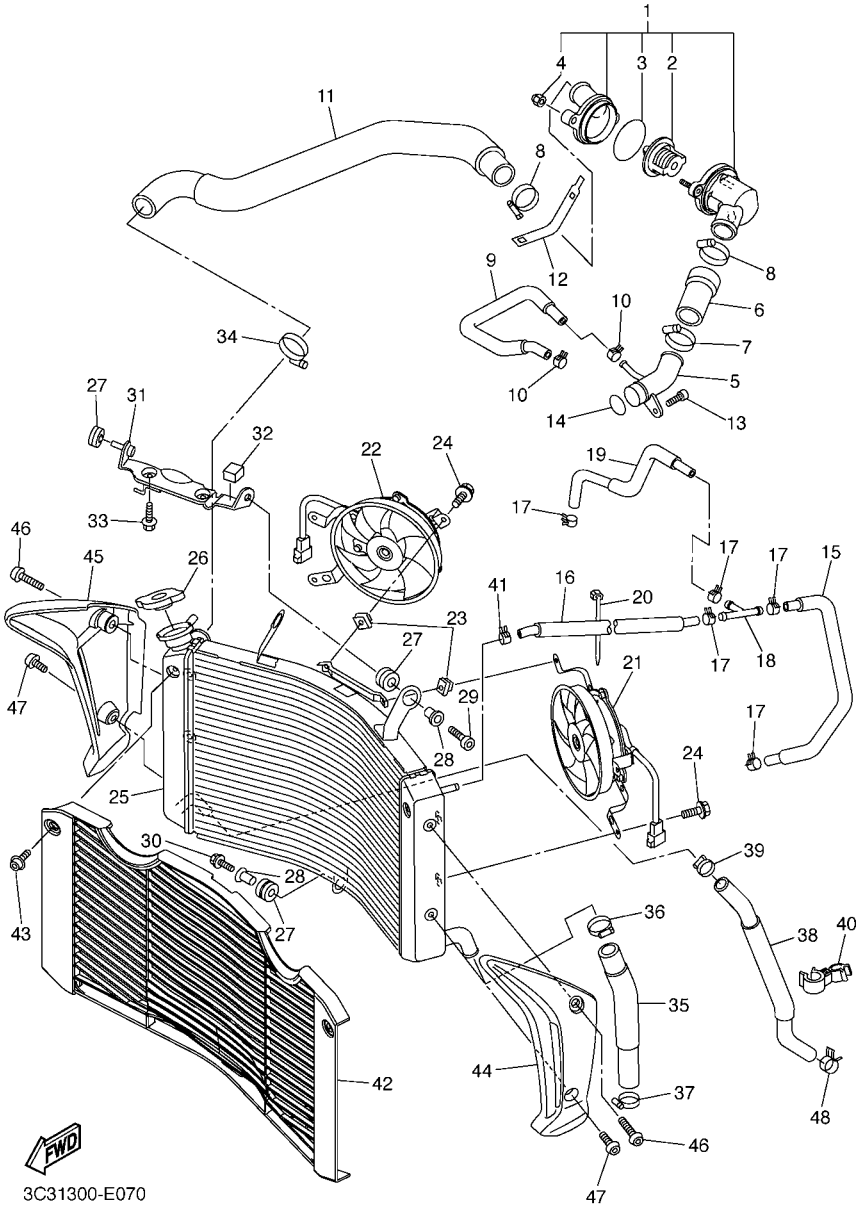

FIG. 7 RADIADOR & MANGUERA

REF. Nº	CODIGO Nº	DESCRIPCION	5D01					OBSERVACIONES
1	2D1–12410–00	TERMOSTATO CONJUNTO	1					
2	5LP–12411–00	.TERMOSTAT	1					
3	93210–49046	.ANILLO O	1					
4	90176–06014	.TUERCA CORONA	2					
5	5VY–12485–10	TUBO 5	1					
6	5VY–12579–00	MANGUERA 4	1					
7	90450–35001	BRIDA, MANGUERA	1					
8	90450–38040	BRIDA, MANGUERA	2					
9	5VY–1243F–00	MANGUERA 3	1					
10	90467–11090	PRESILLA	2					
11	2D1–12578–00	MANGUERA 3	1					
12	5GV–1246A–00	CUBIERTA 1	1					
13	90110–06168	TORNILLO ALLEN	1					
14	93210–235A1	ANILLO O	1					
15	5VY–1243A–00	TUBO 1	1					
16	2D1–1244G–00	MANGUERA4	1					
17	90467–11090	PRESILLA	5					
18	90413–07023	UNION	1					
19	2D1–1243E–00	TUBO 2	1					
20	90464–13073	BRIDA	1					
21	2D1–12405–00	COMPRESOR	1					
22	2D1–12405–10	COMPRESOR	1					
23	1AA–12535–00	EMPAQUETADURA	2					
24	2D1–12675–00	PERNO, SUJECION VENTILADOR	6					
25	2D1–12461–00	RADIADOR COMPLETO	1					
26	22W–12462–00	TAPON, DEL RADIADOR	1					
27	90480–15363	TAPON	3					

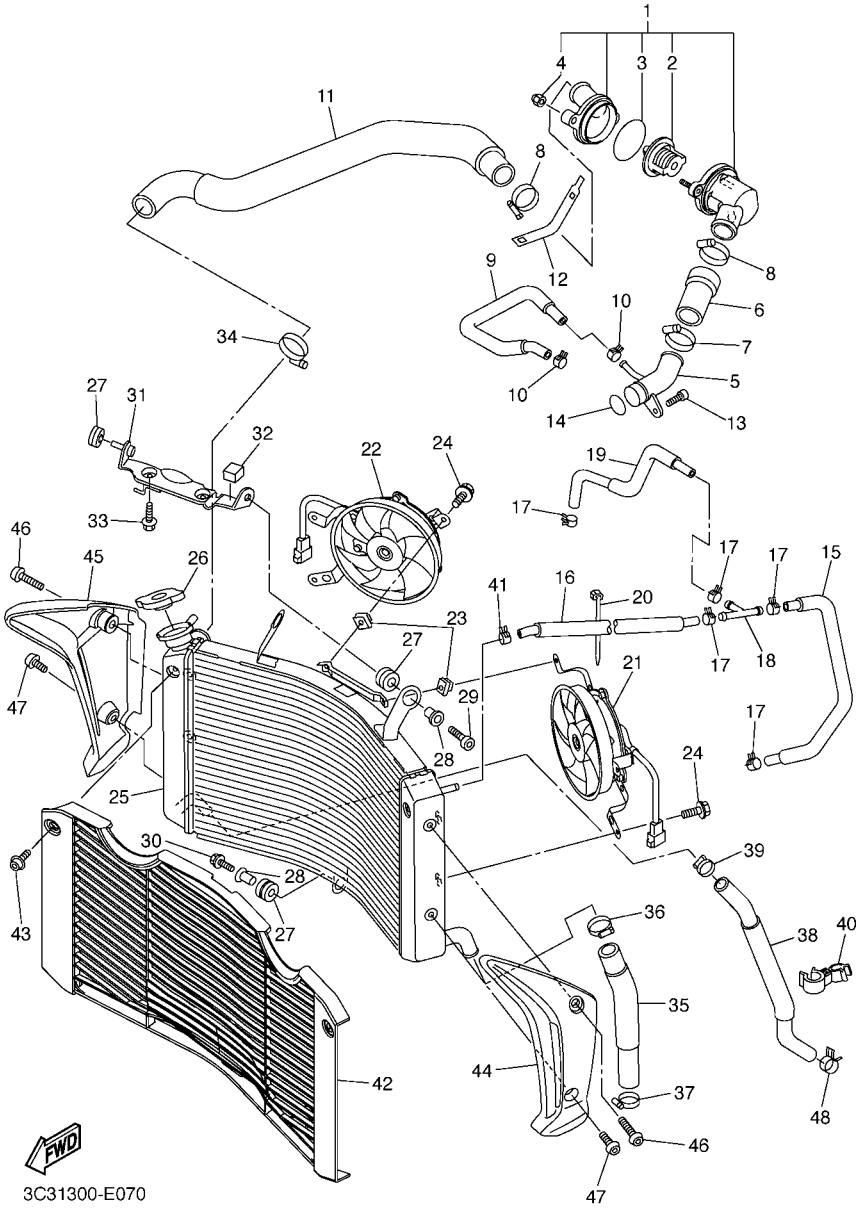

FIG. 7 RADIADOR & MANGUERA

REF. Nº	CODIGO Nº	DESCRIPCION	5D01					OBSERVACIONES
28	90387–07391	ESPACIADOR	2					
29	90109–06015	PERNO	1					
30	90109–067E6	PERNO	1					
31	2D1–12464–00	APOYO DE RADIADOR	1					
32	2D1–2139U–00	AMORTIGUADOR 2	1					
33	95807–06012	TORNILLO	2					
34	90450–35001	BRIDA, MANGUERA	1					
35	2D1–12551–00	55 PLACA	1					
36	90450–35001	BRIDA, MANGUERA	1					
37	90450–32001	BRIDA, MANGUERA	1					
38	2D1–12589–00	MANGUERA 6	1					
39	90450–22017	BRIDA, MANGUERA	1					
40	90464–23002	BRIDA	1					
41	90467–11090	PRESILLA	1					
42	2D1–12467–00	CUBIERTA DEL RADIADOR	1					
43	90111–06031	TORNILLO	2					
44	3C3–1240J–00–P0	CUBIERTA DE RADIADOR COMPLETO	1					MBL2
45	3C3–1240K–00–P0	CUBIERTA DE RADIADOR COMPLETO	1					MBL2
46	90111–06080	TORNILLO	2					
47	90111–06079	TORNILLO	2					
48	90467–200A0	PRESILLA	1					

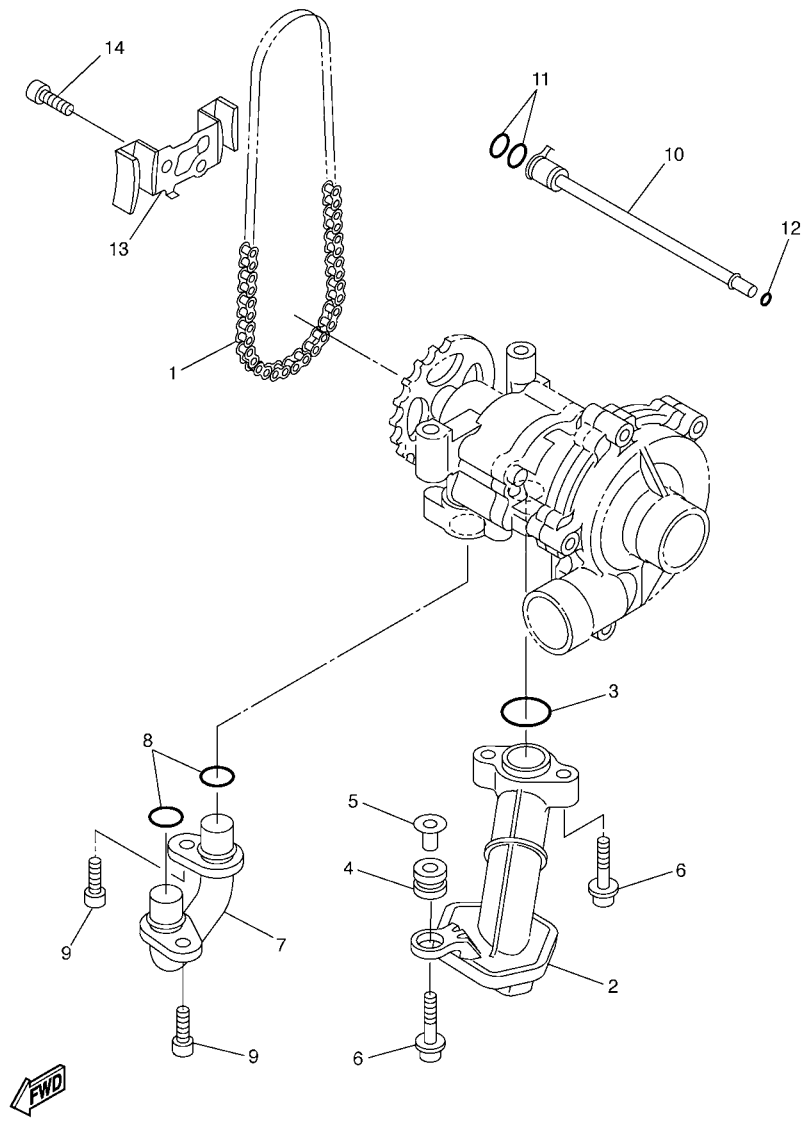

5VY1300-C080

FIG. 8 BOMBA DE ACEITE

REF. Nº	CODIGO Nº	DESCRIPCION	5D01					OBSERVACIONES
1	94580–25078	CADENA (DID25 78LE)	1					
2	5VY–13410–00	CAJA DE FILTRO COMPLETA	1					
3	93210–22298	ANILLO O	1					
4	90480–13010	TAPON	1					
5	5VY–13117–10	COLLAR, DISTANCIA	1					
6	90110–06173	TORNILLO ALLEN	3					
7	5VY–13416–00	TUBO DE ACEITE 1	1					
8	93210–14003	ANILLO O	2					
9	90110–06161	TORNILLO ALLEN	2					
10	5VY–1316E–00	TUBO, DE ENTREGA 5	1					
11	93210–09165	ANILLO O	2					
12	93210–06667	ANILLO O	1					
13	5VY–13898–00	SOSTEN	1					
14	90110–06182	TORNILLO ALLEN	2					

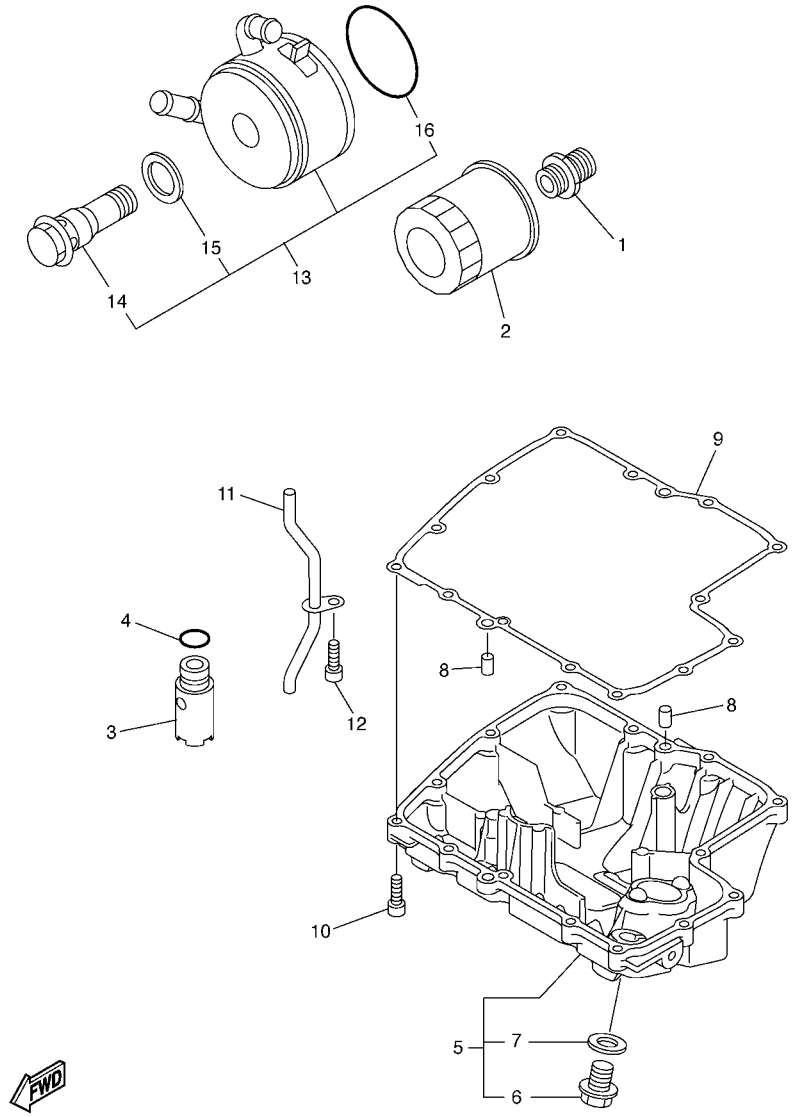

FIG. 9 FILTRO ACEITE

REF. Nº	CODIGO Nº	DESCRIPCION	5D01					OBSERVACIONES
1	90401–20145	PERNO DE UNION	1					
2	5GH–13440–20	ELEMENTO FILTRO DE ACEITE	1					
3	5VY–13490–00	VALVELA DE DESCOMPRESION	1					
4	93210–15566	ANILLO O	1					
5	2D1–13417–10	TAPA DE FILTRO	1					
6	90340–14132	.TORNILLO, DE DRENAJE	1					
7	214–11198–01	.EMPAQUE	1					
8	99530–08012	PASADOR, DE ESPIGA	2					
9	4C8–13414–00	EMPAQUE DE TAPA FILTRO	1					
10	91312–06025	TORNILLO	14					
11	5VY–13161–00	TUBO CONDUCTOR 1	1					
12	90110–06182	TORNILLO ALLEN	1					
13	5VY–13470–00	ENFRIADOR DE ACEITE COMPLETO	1					
14	5EB–12822–00	.PERNO DE UNION	1					
15	5EB–13475–00	.EMPAQUE	1					
16	5JW–13473–00	.ANILLO O	1					

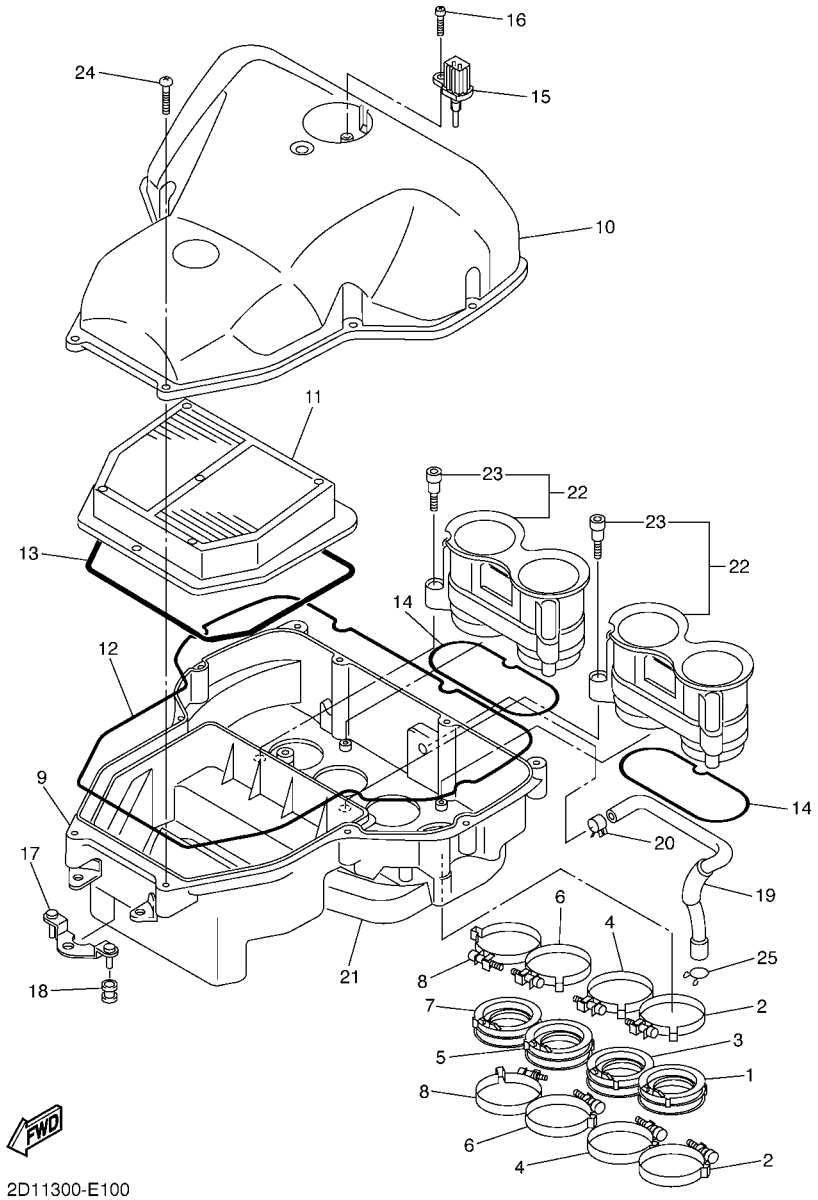

FIG. 10 ADMISION

REF. Nº	CODIGO Nº	DESCRIPCION	5D01					OBSERVACIONES
1	5VY–13595–00	TOBERA	1					
2	90450–62002	BRIDA, MANGUERA	2					
3	5VY–13596–00	TOBERA DE CARBURADOR 2	1					
4	90450–62002	BRIDA, MANGUERA	2					
5	5VY–13597–00	JUNTA, DE CARBURADOR 3	1					
6	90450–62002	BRIDA, MANGUERA	2					
7	5VY–13598–00	COJINETE DE RODILLOS	1					
8	90450–62002	BRIDA, MANGUERA	2					
9	2D1–14411–00	CAJA FILTRO DEL AIRE 1	1					
10	2D1–14421–00	CAJA FILTRO DEL AIRE 2	1					
11	2D1–14451–00	ELEMENTO DEL FILTRO DEL AIRE	1					
12	2D1–14452–00	SELLO	1					
13	2D1–14462–00	SELLO	1					
14	5VY–14457–00	SELLO	2					
15	8FP–85886–00	SENSOR	1					
16	97702–50520	TORNILLO ROSCA HEMBRA	1					
17	2D1–14498–00	SOPORTE 1	1					
18	90480–08264	TAPON	2					
19	2D1–15393–00	TUBO, RESPIRADERO2	1					
20	90467–14171	PRESILLA	1					
21	2D1–14409–00	AMORTIGUADOR	1					
22	2D1–1440B–00	UNION COMPLETO	2					
23	90109–05005	.PERNO	3					
24	97702–50025	TORNILLO ROSCA HEMBRA	11					
25	90467–14015	PRESILLA	1					

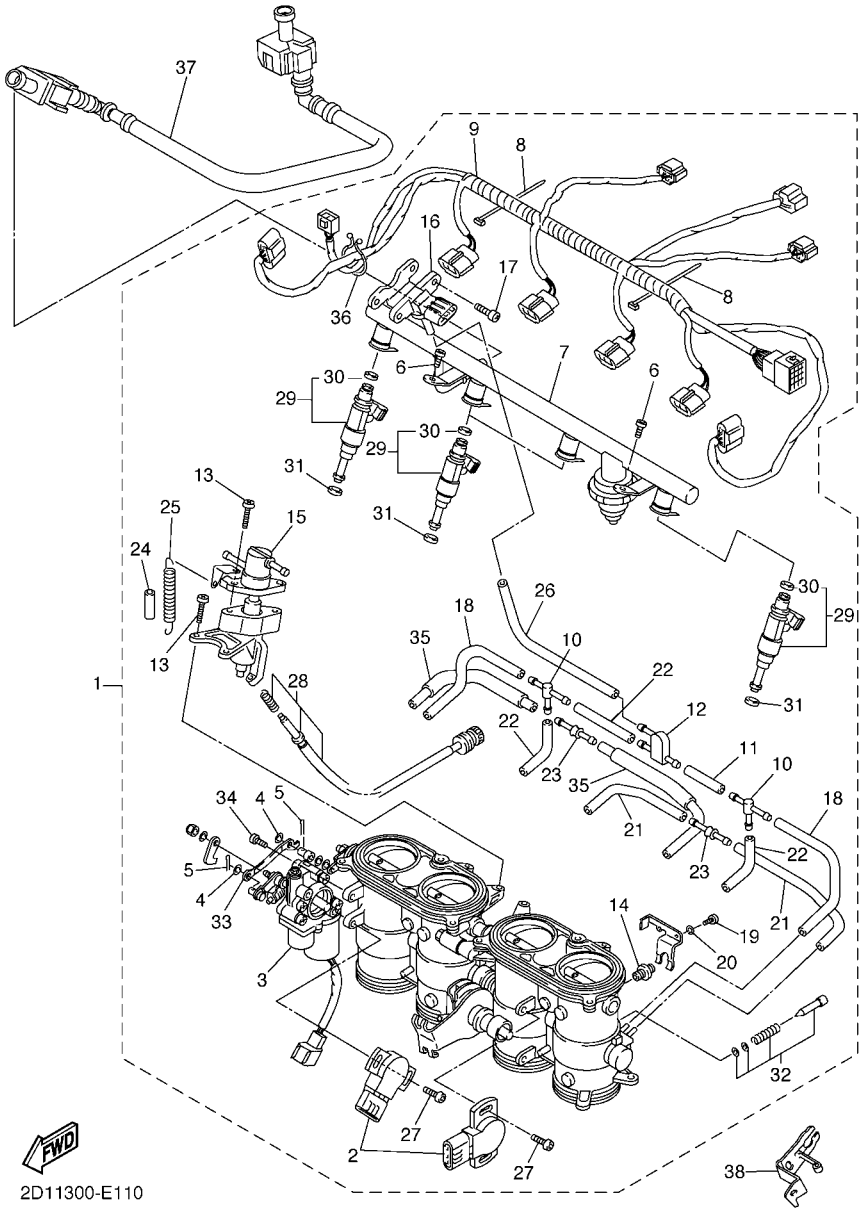

FIG. 11 ADMISION 2

REF. Nº	CODIGO Nº	DESCRIPCION	5D01					OBSERVACIONES
1	2D1–13750–00	CAJA DE ACELERADOR COMPL.	1					
2	5FL–85885–02	.TERMICA SENSORIO	2					
3	5VY–85850–00	.MOTOR ENGRANADO	1					
4	22U–14952–00	.ARANDELA	2					
5	91492–12010	.PASADOR DE CHAVETA	2					
6	98502–06012	.TORNILLO	2					
7	2D1–13160–00	.TUBO DE LLEGADA CONJUNTO 1	1					
8	4KM–14137–00	.PRESILLA	5					
9	2D1–82386–00	.EXTENSION, ARNES DE CABLES	1					
10	68V–24376–00	.TUBO DE UNION 1	2					
11	5JW–14396–00	.TUBO	1					
12	3XV–14251–00	.NIPLE	1					
13	98502–05014	.TORNILLO	4					
14	5VY–14171–00	.EMBOLO DE ARRANQUE	2					
15	5VY–14204–00	.CAJA, DE ARRANQUE	1					
16	1C7–82380–00	.SENSOR DE PRESION	1					
17	92502–06010	.TORNILLO CABEZA CRUZADA	2					
18	5FL–14349–10	.TUBO	2					
19	98507–03016	.TORNILLO DE CABEZA PLANA	4					
20	92990–03100	.ARANDELA PLANA	4					
21	5PW–14349–00	.TUBO	2					
22	5PS–14987–00	.TUBO	3					
23	5PW–14251–00	.NIPLE	2					
24	5DM–14936–00	.ASIENTO DE RESORTE	1					
25	5JW–14589–00	.RESORTE	1					
26	5SL–14349–00	.TUBO	1					
27	8CC–14216–10	.TORNILLO	4					

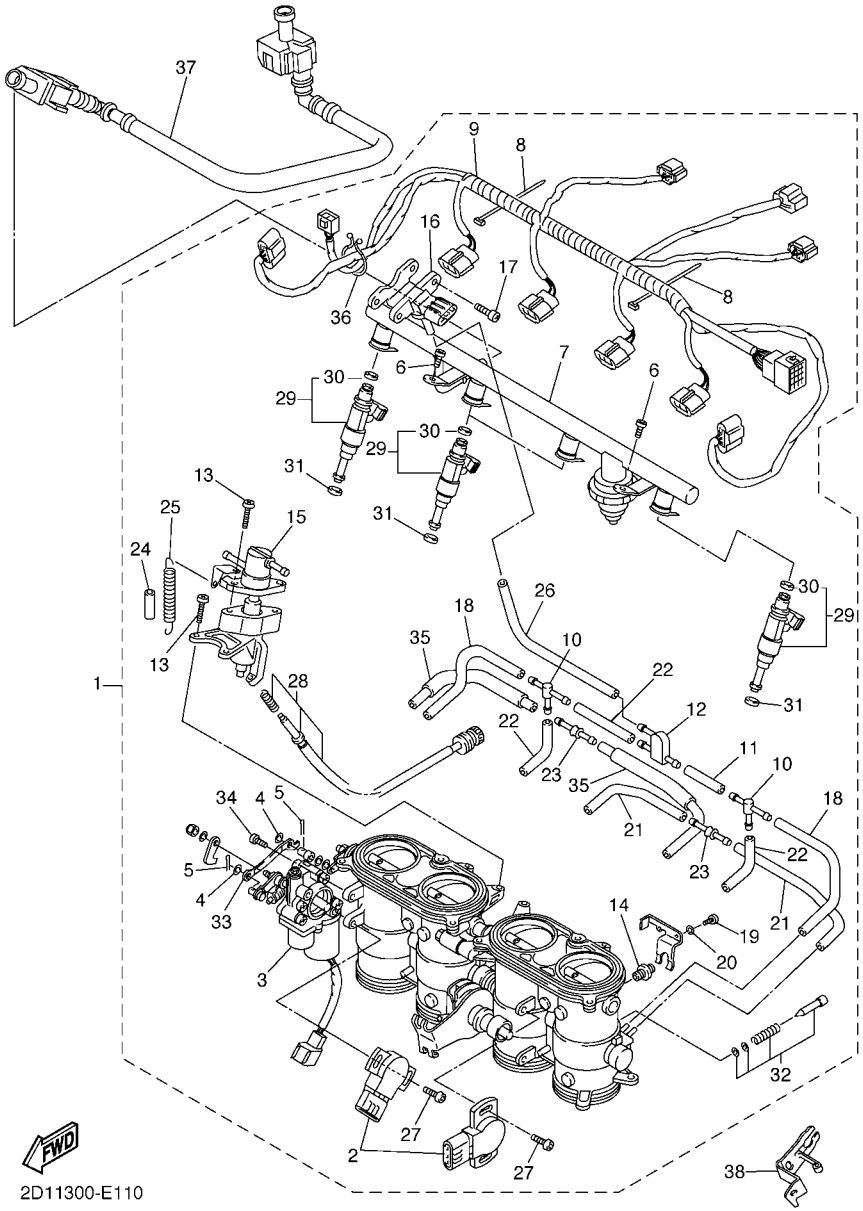

FIG. 11 ADMISION 2

REF. Nº	CODIGO Nº	DESCRIPCION	5D01					OBSERVACIONES
28	5PW–14103–00	.CJTO. TORNILLO DEL RALENTI	1					
29	5VY–13761–00	.INYECTOR	4					
30	5PS–14147–00	..ANILLO O	1					
31	8FP–13556–00	.EMPAQUE	4					
32	5JW–14104–00	.CJTO. TORNNILLO DE AIRE	2					
33	5VY–14905–00	.PALANCA DE ARRANQUE	1					
34	98507–06020	.TORNILLO DE CABEZA CON PLANA	2					
35	5VY–13543–00	.TUBO DE AIRE	2					
36	90464–30040	.BRIDA	1					
37	2D1–13971–00	ANILLO DE ESPACIADOR	1					
38	2D1–14413–00	SOPORTE	1					

FIG. 12 SYSTEMA DE INDUCCION DE AIRE

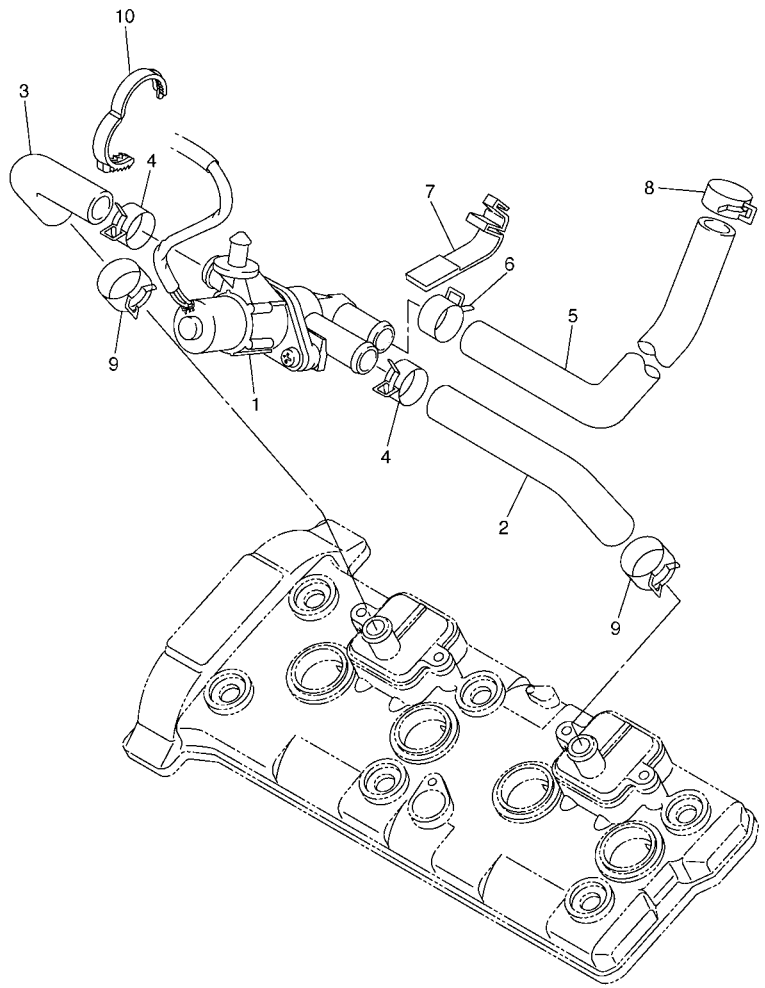

2D11300-E120

REF. Nº	CODIGO Nº	DESCRIPCION	5D01					OBSERVACIONES
1	2D1–14840–00	VALVULA, CORTE DE AIRE	1					
2	5VY–14881–00	TUBO 1	1					
3	5VY–14882–00	TUBO 2	1					
4	90467–18172	PRESILLA	2					
5	5VY–14883–00	TUBO 3	1					
6	90467–18172	PRESILLA	1					
7	5JW–14723–00	CUBIERTA	2					
8	90467–17128	PRESILLA	1					
9	90467–180A0	PRESILLA	2					
10	90464–28003	BRIDA	1					

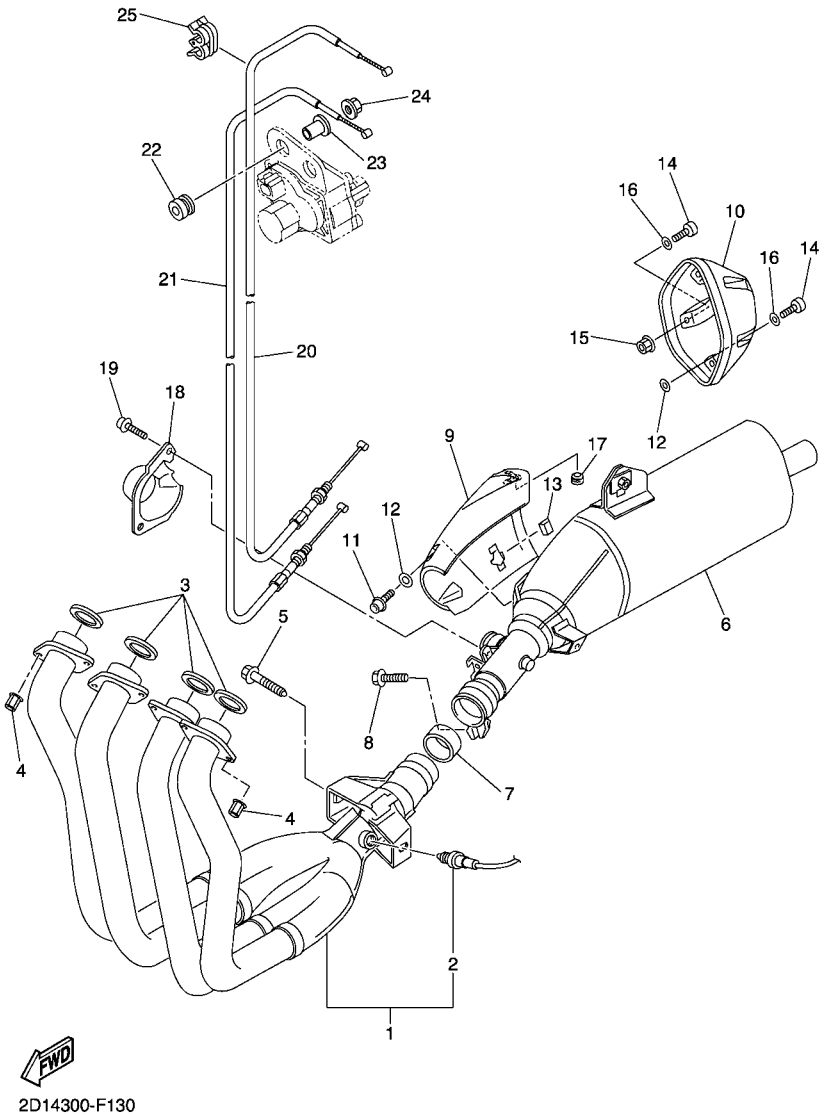

FIG. 13 DESCARGA

REF. Nº	CODIGO Nº	DESCRIPCION	5D01					OBSERVACIONES
1	2D1–14602–00	TUBO DE ESPAPE COMPLETO	1					
2	2D1–8592A–00	.SENSOR	1					
3	4FM–14613–00	JUNTA, TUBO DE ESCAPE	4					
4	90179–08410	TUERCA	8					
5	90109–08170	PERNO	2					
6	2D1–14703–00	SILENCIADOR COMPL. 1	1					
7	5VY–14755–00	EMPAQUE DE SILENCIADOR	1					
8	95814–08030	TORNILLO	1					
9	2D1–14718–10	PROTECTOR DE SILENCIADOR 1	1					
10	2D1–14799–00	TAPA	1					
11	90111–06060	TORNILLO	2					
12	90201–05017	ARANDELA PLANA	6					
13	3MA–24181–00	AMORTIGUADOR DE MONTAJE 1	2					
14	91380–06014	PERNO	5					
15	95702–06500	TUERCA DE REBORDE	1					
16	92990–06600	ARANDELA PLANA	5					
17	2D1–14737–00	AMORTIGUADOR DE SILENCIADOR	1					
18	2D1–14826–00	PROTECTOR DE VALVULA DE ESCAPE	1					
19	90110–06110	TORNILLO ALLEN	2					
20	2D1–1133E–00	CABLE DE POLEA	1					
21	2D1–1133F–10	CABLE DE POLEA	1					
22	90480–14604	TAPON	2					
23	90387–06M60	ESPACIADOR	1					
24	95702–06500	TUERCA DE REBORDE	1					
25	90464–04001	BRIDA	1					

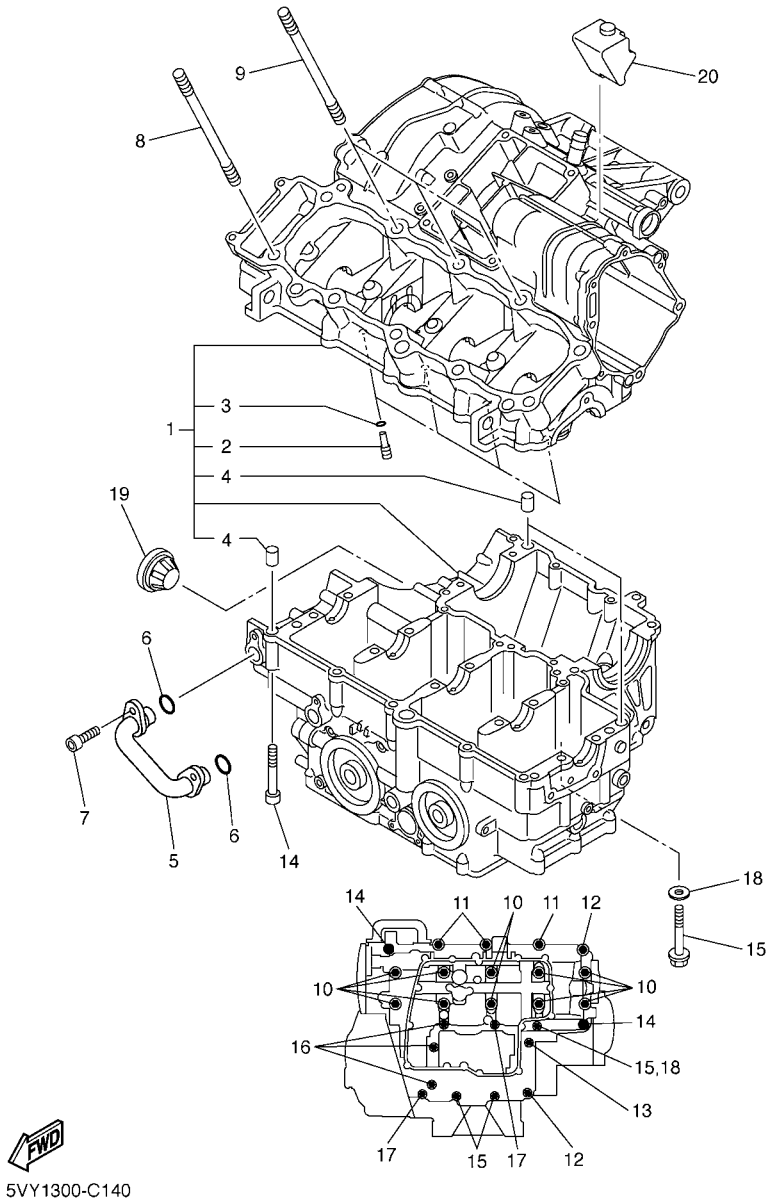

FIG. 14 CARTER

REF. Nº	CODIGO Nº	DESCRIPCION	5D01					OBSERVACIONES
1	4C8–15100–00	CARTER COMPLETO	1					
2	5EB–15155–00	.BOQUILLA 3	4					
3	93210–04092	.ANILLO O	4					
4	99530–10014	.PASADOR, DE ESPIGA	3					
5	5VY–13418–10	TUBO DE ACEITE 2	1					
6	93210–14003	ANILLO O	2					
7	90110–06161	TORNILLO ALLEN	2					
8	90116–10032	ESPARRAGO	7					
9	90116–10023	ESPARRAGO	3					
10	90119–09003	TORNILLO CON ARANDELA	10					
11	95812–08050	TORNILLO DE REBORDE	3					
12	95812–08060	TORNILLO DE REBORDE	2					
13	90105–08101	TORNILLO	1					
14	90109–06100	PERNO	2					
15	95812–06060	TORNILLO DE REBORDE	3					
16	95812–06070	TORNILLO DE REBORDE	3					
17	95812–06050	TORNILLO DE REBORDE	2					
18	90430–06166	JUNTA	1					
19	5PW–15361–00	MEDIDOR DE NIVEL	1					
20	5VY–15316–00	AMORT. MONTANTE MOTOR 1	1					

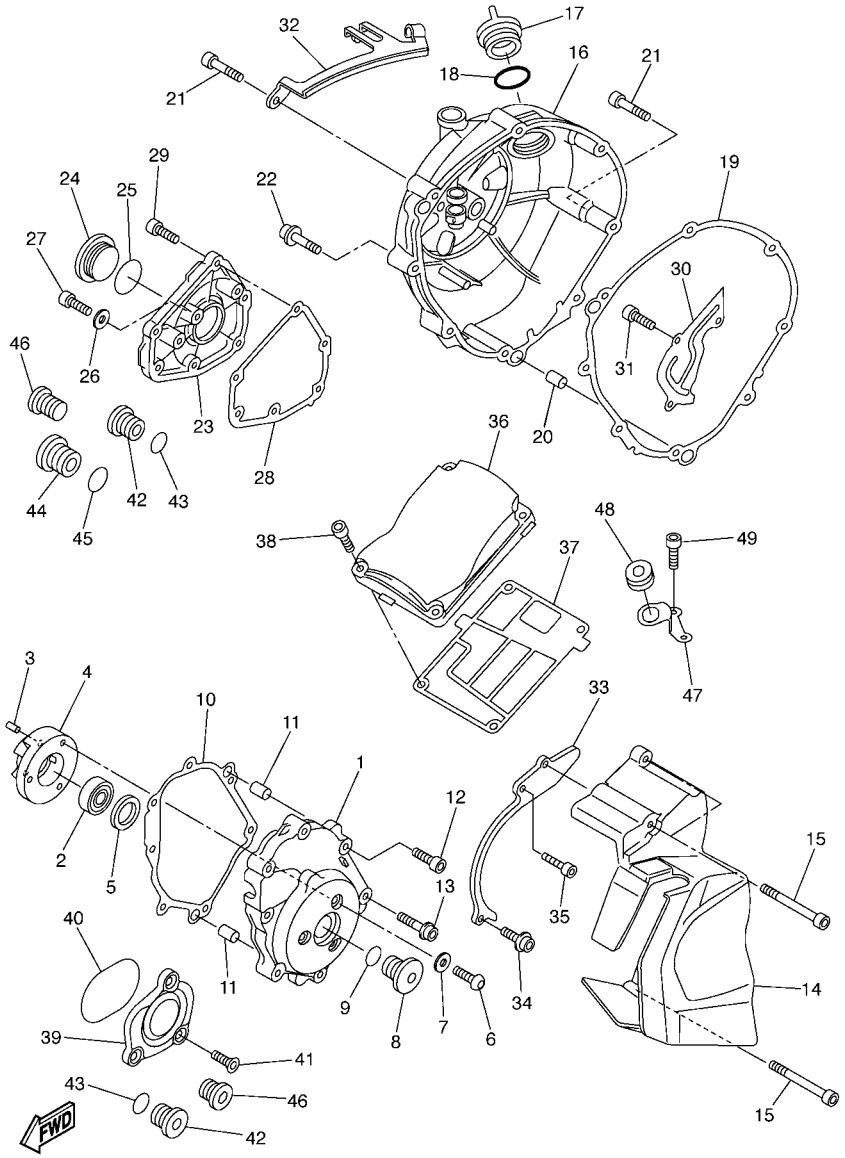

2D14300-F150

FIG. 15 CUBIERTA DE CARTER 1

REF. Nº	CODIGO Nº	DESCRIPCION	5D01					OBSERVACIONES
1	5VY–15411–00	CUBIERTA DE CARTER 1	1					
2	93306–20124	COJINETE	1					
3	93605–10108	PASADOR DE CLAVIJA	2					
4	5VY–15164–00	CAJA DE COJINETE 2	1					
5	5VY–15542–00	COLLAR 2	1					
6	90149–06064	TORNILLO DE REGLAJE	3					
7	90201–06431	ARANDELA PLANA	3					
8	5PX–15189–00	TAPON	1					
9	93210–22382	ANILLO O	1					
10	2D1–15451–10	EMPAQ DE CUBIERTA DE CARTER	1					
11	99480–10018	PASADOR	2					
12	90109–06031	PERNO	4					
13	90110–08068	TORNILLO ALLEN	3					
14	2D1–15418–00	CUBIERTA CAJA DE CADENA	1					
15	90110–06255	TORNILLO ALLEN	3					
16	2D1–15421–00	TAPA DE CARTER DERECHA	1					
17	3F9–15362–00	TAPON DEL NIVEL DE ACEITE	1					
18	93210–27194	ANILLO O	1					
19	4C8–15461–00	JUNTA TAPA CARTER DERECHO 2	1					
20	93610–20189	PASADOR DE CLAVIJA	2					
21	90109–06016	PERNO	7					
22	90110–06112	TORNILLO ALLEN	1					
23	2D1–15416–00	CUBIERTA DE BOMBA DE ACEITE	1					
24	90340–32004	TORNILLO, DE DRENAJE	1					
25	93210–32172	ANILLO O	1					
26	90430–08143	JUNTA	1					
27	92014–08012	PERNO	1					

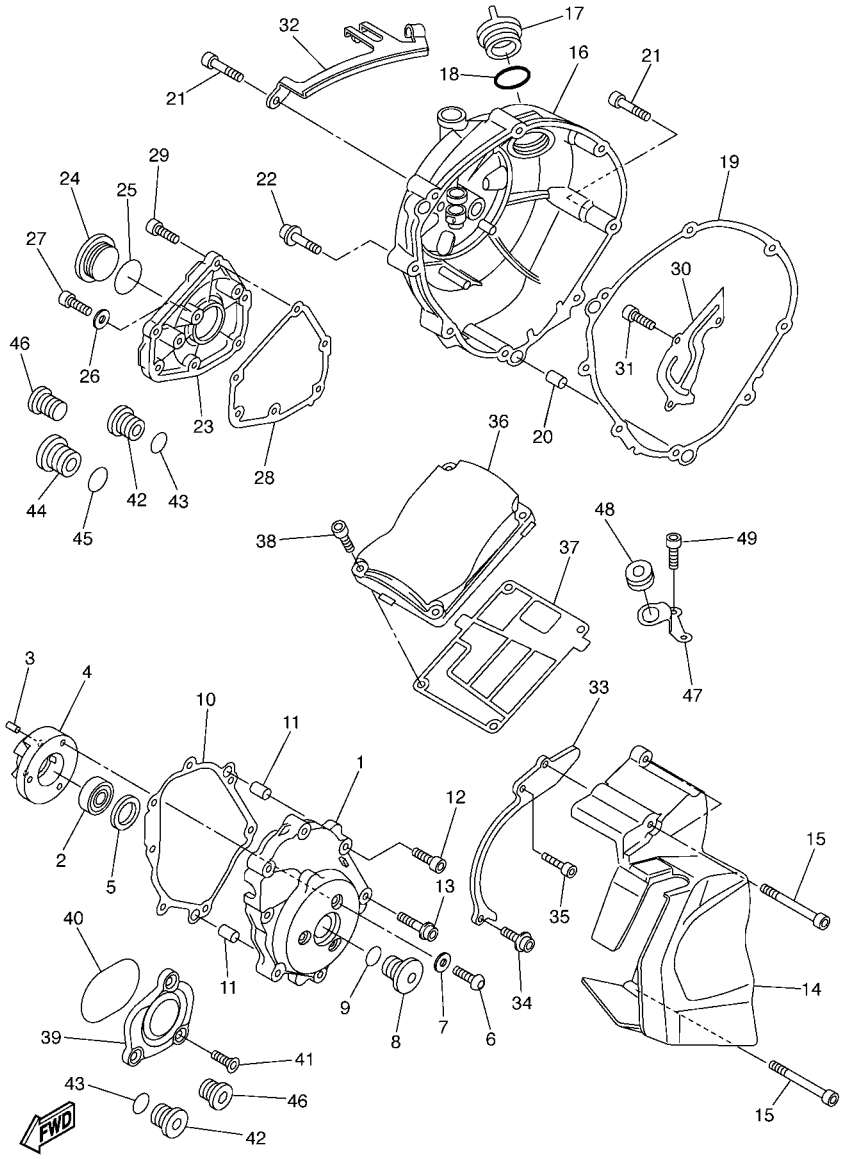

FIG. 15 CUBIERTA DE CARTER 1

REF. Nº	CODIGO Nº	DESCRIPCION	5D01					OBSERVACIONES
28	4C8–15456–00	EMPAQ CUBTA.BOMBA ACEITE 1	1					
29	90109–06014	PERNO	6					
30	5VY–11165–00	PLACA RESPIRADERO	1					
31	90110–06182	TORNILLO ALLEN	3					
32	2D1–15441–00	SOSTEN DE CABLE DE EMBRAGUE	1					
33	4B1–15113–00	PLACA	1					
34	90110–06168	TORNILLO ALLEN	1					
35	90110–06108	TORNILLO ALLEN	1					
36	2D1–15413–00	CUBIERTA	1					
37	4C8–15462–00	EMPAQ CUBIERTA DE CARTER 3	1					
38	90109–06015	PERNO	4					
39	5VY–15431–00	CUBIERTA DE CARTER 3	1					
40	93210–57003	ANILLO O	1					
41	90151–06022	TORNILLO EMBUTIDO	3					
42	36Y–15189–00	TAPON	3					
43	93210–16325	ANILLO O	3					
44	4H7–15189–00	TAPON	1					
45	93210–22382	ANILLO O	1					
46	90340–12003	TORNILLO, DE DRENAJE	2					
47	5VY–12443–10	APOYO	1					
48	90480–13014	TAPON	1					
49	91380–06014	PERNO	2					

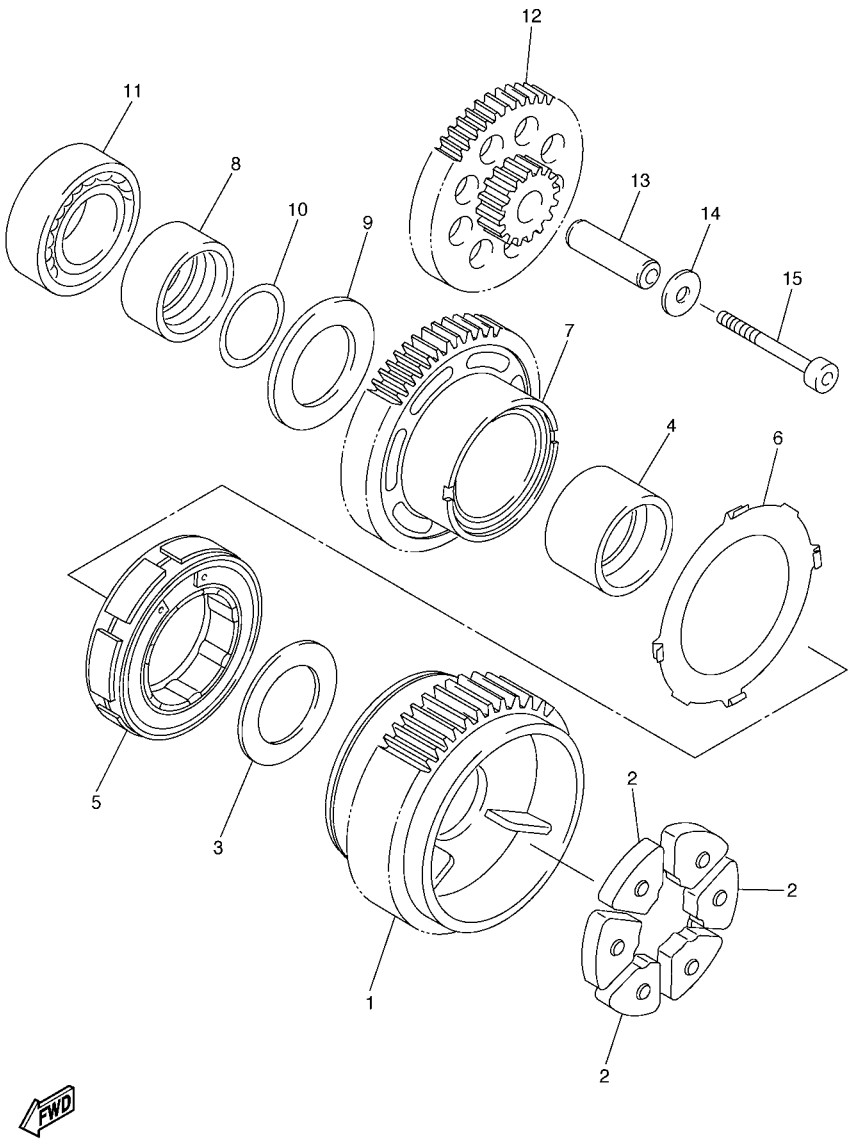

FIG. 16 ARRANQUE

REF. Nº	CODIGO Nº	DESCRIPCION	5D01					OBSERVACIONES
1	2D1–11537–00	ENGRANAJE TRACCION	1					
2	5VY–16155–00	AMORTIGUADOR 1	3					
3	90201–20016	ARANDELA PLANA	1					
4	5VY–11478–00	COLLAR	1					
5	5VY–15570–00	EMBRAGUE DEL ARRANQUE COMPLETA	1					
6	5VY–15586–00	PLACA	1					
7	5VY–15515–00	ENGRANAJE 3	1					
8	5VY–11445–00	ESPACIADOR	1					
9	90201–20017	ARANDELA PLANA	1					
10	93210–18397	ANILLO O	1					
11	93306–20230	COJINETE	1					
12	5VY–15517–00	ENGRENAJE POSICION 2DA	1					
13	5VY–15521–00	EJE 1	1					
14	90201–06589	ARANDELA PLANA	1					
15	90110–06176	TORNILLO ALLEN	1					

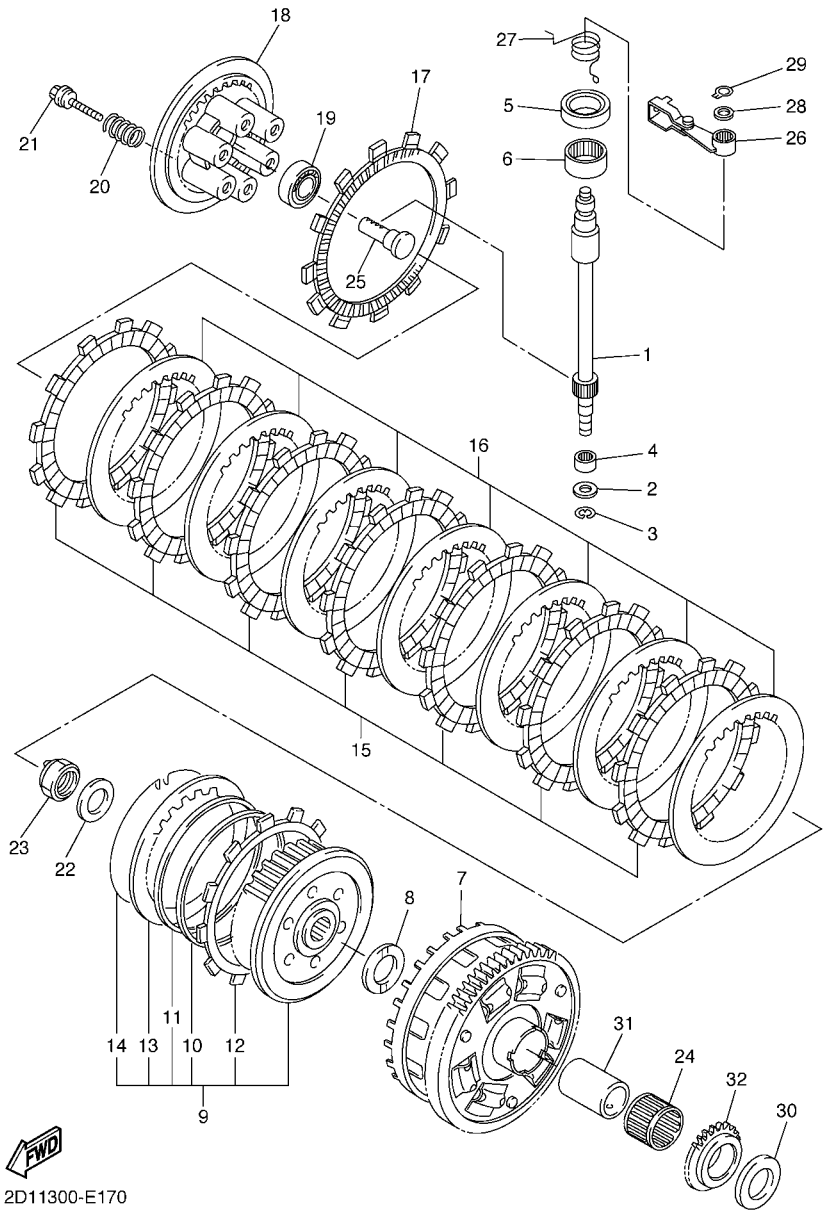

FIG. 17 EMBRAGUE

REF. Nº	CODIGO Nº	DESCRIPCION	5D01					OBSERVACIONES
1	2D1–16382–00	EJE DE PALANCA DE EMPUJE	1					
2	92907–08600	ARANDELA	1					
3	99001–07600	PRESILLA REDONDA	1					
4	93317–11096	COJINETE	1					
5	93102–15212	SELLO ACEITE	1					
6	93315–31502	COJINETE DE RODILLOS	1					
7	5VY–16150–00	CAMPANA DE EMBRAGUE	1					
8	5VY–16154–00	ARANDELA, DE EMPUJE 1	1					
9	2D1–16370–00	COPA DE EMBRAGUE COMPLETA	1					
10	5VY–16384–00	.PLACA DE ASIENTO	1					
11	5VY–16383–00	.RESORTE DE COPA DE EMBRAGUE	1					
12	5VY–16331–00	.DISCO, DE FRICCION	1					
13	5VY–16325–00	.DISCO, DE EMBRAGUE	1					
14	4X7–16385–00	.RESORTE DE COPA DE EMBRAGUE	1					
15	5VY–16321–00	PLACA DE FRICCION	7					
16	5VY–16325–00	DISCO, DE EMBRAGUE	7					
17	5VY–16330–00	PLACA DE FRICCION 2	1					
18	5VY–16351–00	PLATO DE PRESION	1					
19	93306–00304	COJINETE	1					
20	90501–230A0	RESORTE DE COMPRESION	6					
21	90159–06026	TORNILLO CON VALONA	6					
22	90208–20001	ARANDELA DE RESORTE CONICO	1					
23	90179–20007	TUERCA	1					
24	93310–232R9	COJINETE DE RODILLOS	1					
25	4XV–16356–01	VARILLA DE EMPUJE 1	1					
26	5VY–16340–00	PALANCA DE EMPUJE COMPLETA	1					
27	90508–18051	RESORTE DE TORSION	1					

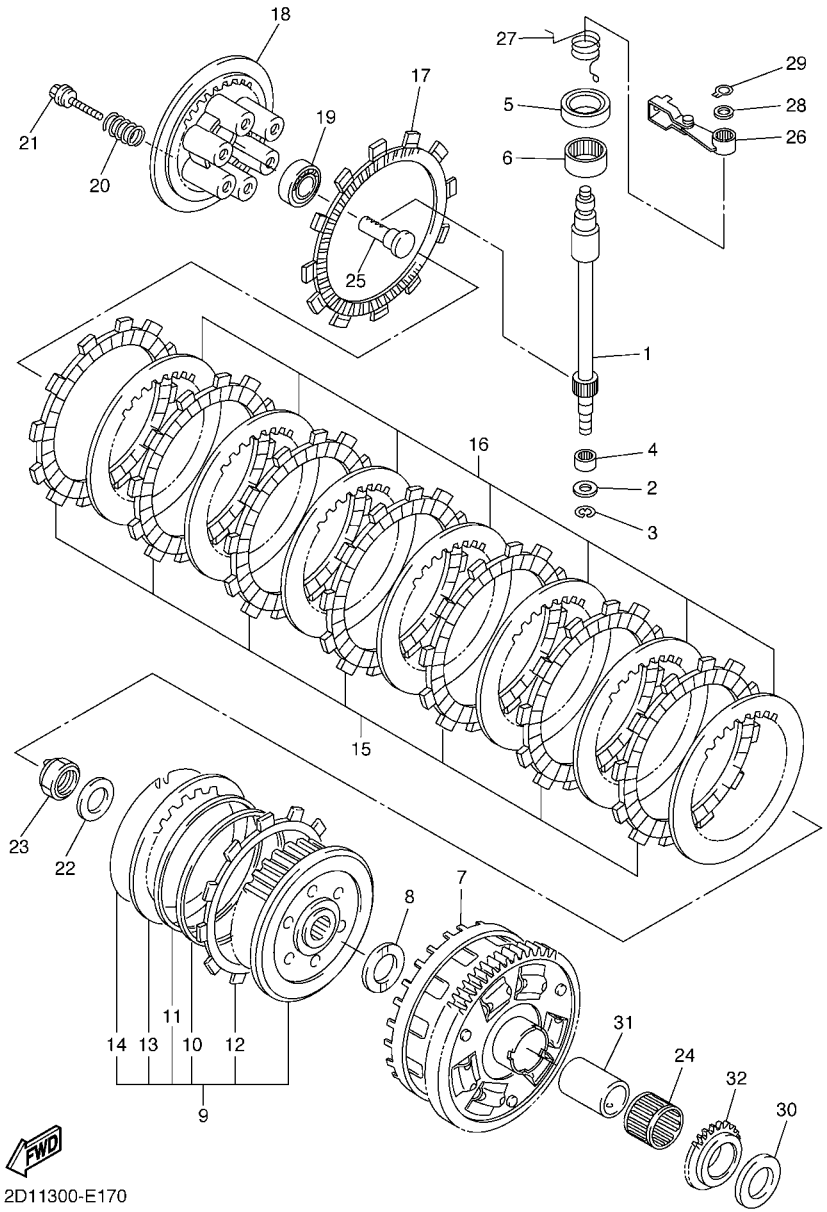

FIG. 17 EMBRAGUE

REF. Nº	CODIGO Nº	DESCRIPCION	5D01					OBSERVACIONES
28	90201–10029	ARANDELA PLANA	1					
29	99009–10400	PRESILLA REDONDA	1					
30	5VY–16164–00	PLACA DE EMPUJE 2	1					
31	5VY–16181–00	SEPARADOR	1					
32	5VY–13354–00	CATALINA	1					

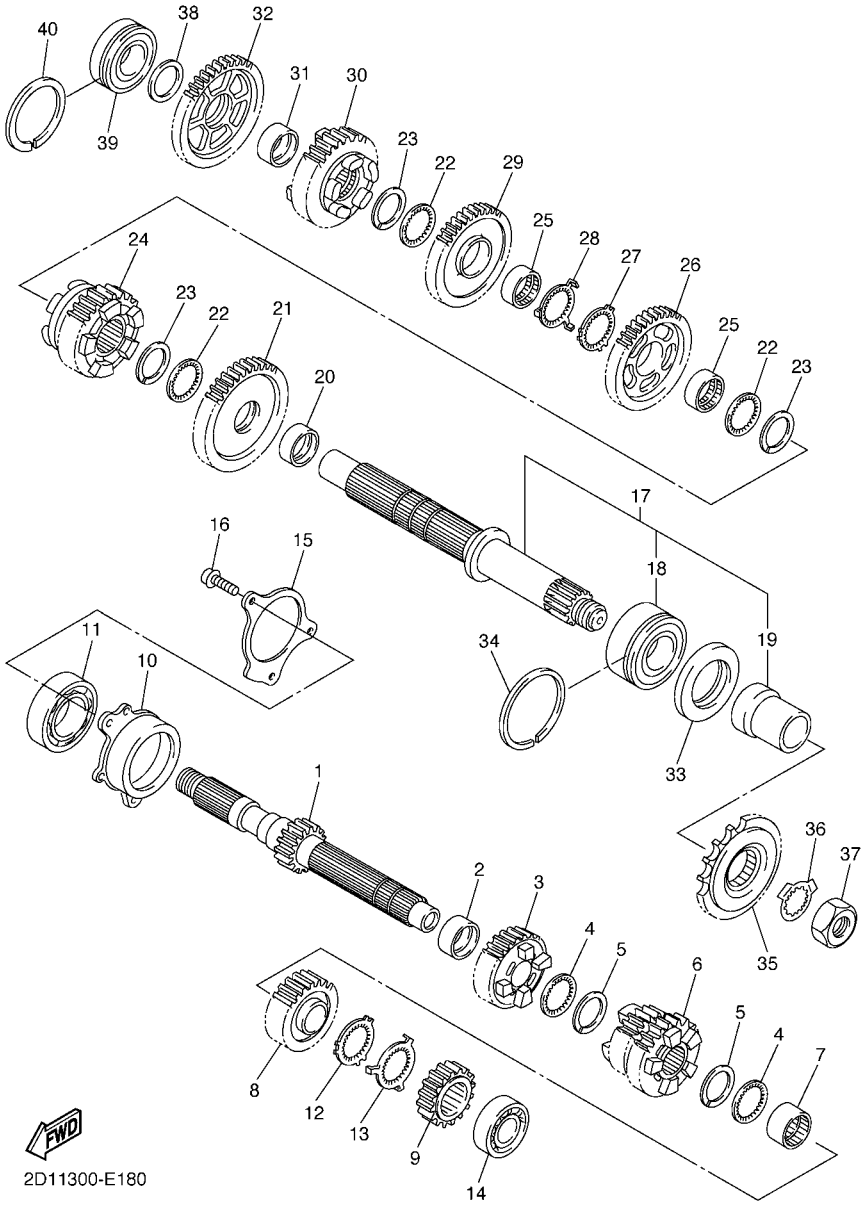

FIG. 18 TRANSMISION

REF. Nº	CODIGO Nº	DESCRIPCION	5D01					OBSERVACIONES
1	5VY–17411–00	EJE PRIMARIO (15T)	1					
2	90387–28003	ESPACIADOR	1					
3	2D1–17151–00	ENGRANAJE PINON DE 5TA (20T)	1					
4	90209–25011	ARANDELA DE SEPARACION	2					
5	93440–28184	SEGURO	2					
6	2D1–17131–00	ENGRANAJE PINON DE 3RA(21/23T)	1					
7	90387–25007	ESPACIADOR	1					
8	2D1–17161–00	ENGRANAJE PINON 6TA (24T)	1					
9	2D1–17121–10	ENGRANAJE DE PINON DE 2DA(16T)	1					
10	5VY–15163–00	CAJA DE COJINETE 1	1					
11	93306–20652	COJINETE	1					
12	90214–25004	ARANDELA DE POSICION	1					
13	90214–25003	ARANDELA DE POSICION	1					
14	93306–27208	COJINETE	1					
15	5VY–17446–00	PLACA	1					
16	90110–06164	TORNILLO ALLEN	3					
17	5VY–17402–00	EJE DE TRACCION COMPLETO	1					
18	93305–20605	.COJINETE	1					
19	5VY–17442–00	.COLLAR DISTANCIADOR	1					
20	90387–31003	ESPACIADOR	1					
21	2D1–17221–00	ENGRANAJE RUEDA DE 2DA (33T)	1					
22	90209–28008	ARANDELA DE SEPARACION	3					
23	93440–31187	SEGURO	3					
24	2D1–17261–00	ENGRANAJE DE RUEDA 6TA (29T)	1					
25	90387–28004	ESPACIADOR	2					
26	5VY–17241–00	ENGRANAJE DE RUEDA 4TA (35T)	1					
27	90214–29002	ARANDELA DE POSICION	1					

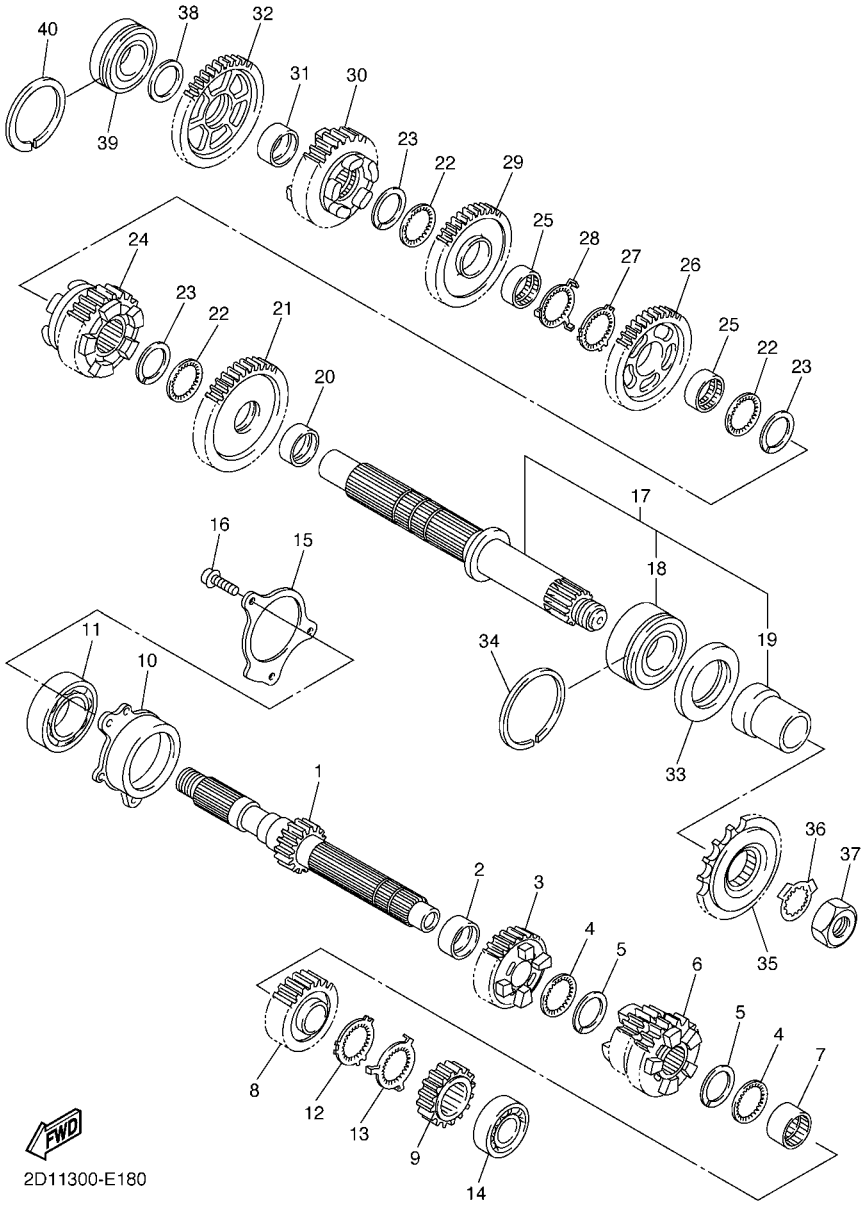

FIG. 18 TRANSMISION

REF. Nº	CODIGO Nº	DESCRIPCION	5D01					OBSERVACIONES
28	90214–28002	ARANDELA DE POSICION	1					
29	5VY–17231–00	ENGRANAJE RUEDA DE 3RA (37T)	1					
30	2D1–17251–01	ENGRANAJE DE RUEDA 5TA (27T)	1					
31	90387–25008	ESPACIADOR	1					
32	5VY–17211–00	ENGRANAJE RUEDA DE 1RA (38T)	1					
33	93102–40330	SELLO ACEITE	1					
34	93440–62032	SEGURO	1					
35	3CV–17460–00	RUEDA DENTADA (17T)	1					
36	90215–30233	ARANDELA DE CIERRE	1					
37	90179–22011	TUERCA	1					
38	90201–257H0	ARANDELA PLANA	1					
39	93306–205A2	COJINETE	1					
40	93440–52009	SEGURO	1					

FIG. 19 LEVA DE CAMBIO & HORQUILLA

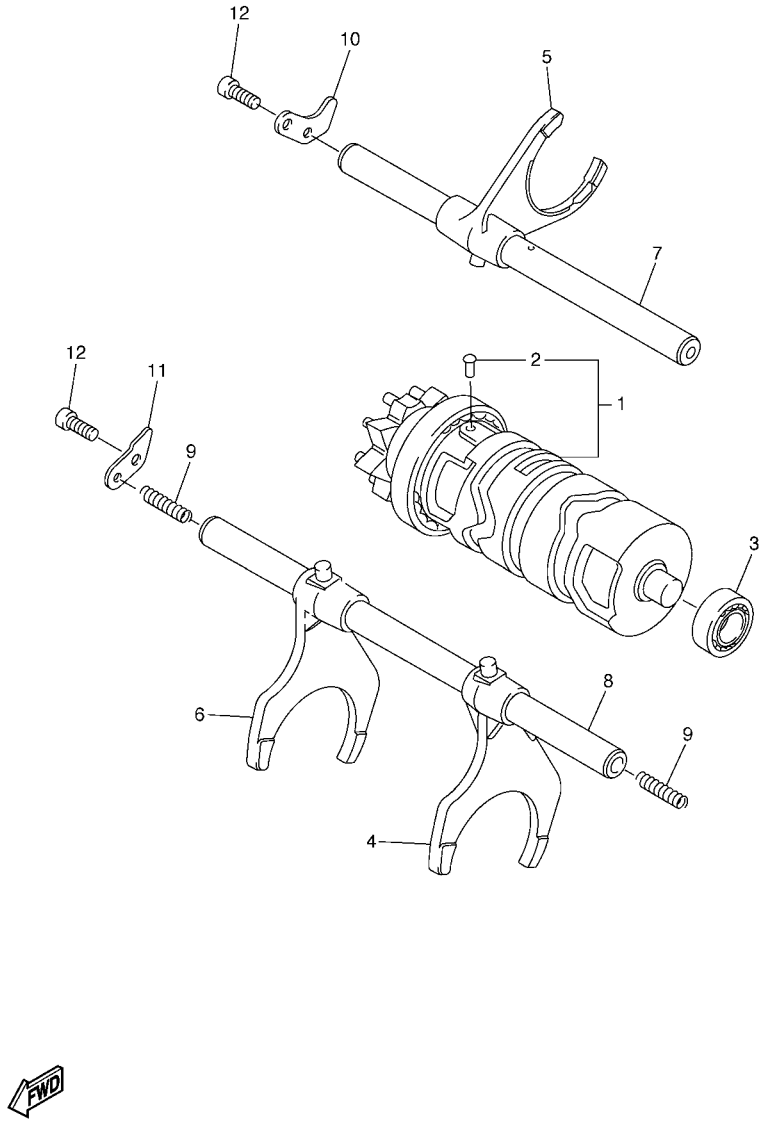

REF. Nº	CODIGO Nº	DESCRIPCION	5D01					OBSERVACIONES
1	5VY–18540–00	LEVA DEL CAMBIO COMPLETA	1					
2	136–18542–00	.PUNTO MUERTO	1					
3	93306–00106	COJINETE	1					
4	2D1–18511–00	HORQUILLA DEL CAMBIO 1	1					
5	2D1–18512–00	HORQUILLA DEL CAMBIO 2	1					
6	5VY–18513–01	HORQUILLA DEL CAMBIO 3	1					
7	5VY–18531–00	BARRA GUIA HORQ. CAMBIO 1	1					
8	5VY–18535–00	BARRA GUIA HORQ .CAMBIO 2	1					
9	90501–064L1	RESORTE DE COMPRESION	2					
10	5VY–18536–00	TOPE DE PALANCA SELECTOR	1					
11	5VY–18562–00	PLACA DE TOPE 2	1					
12	90110–06182	TORNILLO ALLEN	2					

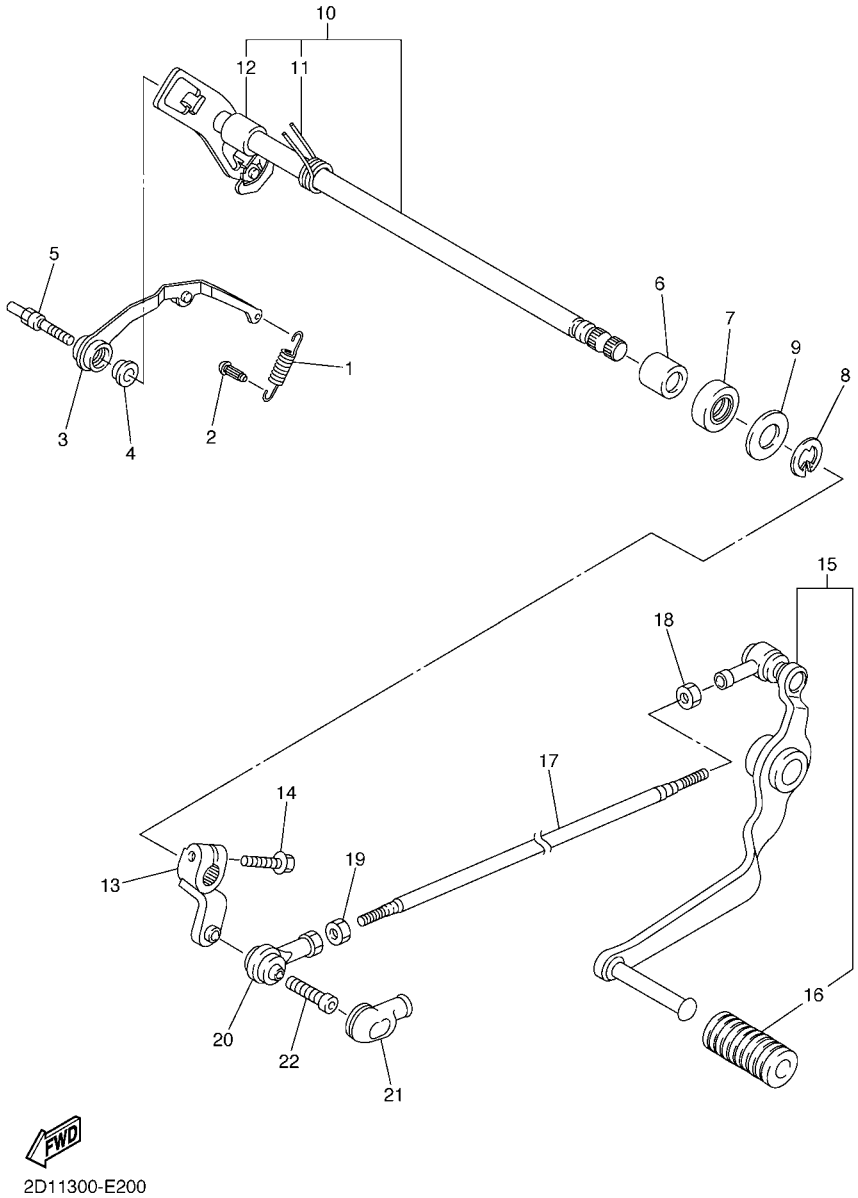

FIG. 20 EJE DE CAMBIO & PEDAL

REF. Nº	CODIGO Nº	DESCRIPCION	5D01					OBSERVACIONES
1	5VY–18144–00	GANCHO DE RESORTE	1					
2	132–16346–00	GANCHO DE RESORTE	1					
3	5VY–18140–00	PALANCA DE TOPE COMPLETA	1					
4	90387–0804S	ESPACIADOR	1					
5	5VY–18127–10	PASADOR DE PALANCA	1					
6	93317–11295	COJINETE	2					
7	93102–12106	SELLO ACEITE (SD 12-22-5 HS)	1					
8	99002–10600	PRESILLA REDONDA	1					
9	90201–12575	ARANDELA PLANA	2					
10	2D1–18101–00	EJE SELECTOR COMPLETO	1					
11	90508–32020	.RESORTE DE TORSION	1					
12	90387–1211D	.ESPACIADOR	1					
13	2D1–18112–00	BRAZO DEL CAMBIO	1					
14	95022–06020	PERNO, DE BRIDA	1					
15	2D1–18110–00	PEDAL DE CAMBIO COMPLETO	1					
16	5EB–18113–00	.FUNDA DEL PEDAL DEL CAMBIO	1					
17	2D1–18115–00	VARILLA DEL CAMBIO	1					
18	90170–06228	TUERCA	1					
19	95304–06700	TUERCA	1					
20	5VX–18116–00	VARILLA DE CONECTOR 1	1					
21	5VX–18154–00	CUBIERTA GUARDAPOLVO	1					
22	90111–06019	TORNILLO	1					

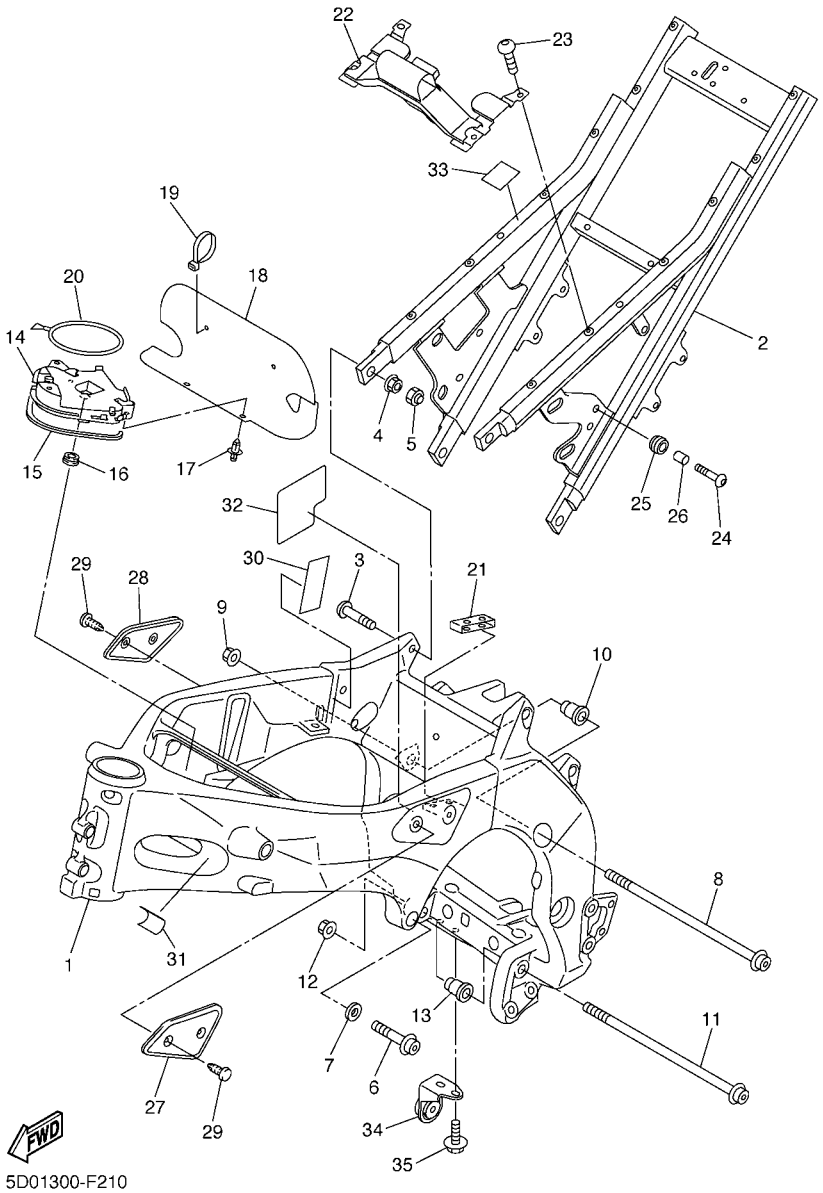

FIG. 21 CUADRO

REF. Nº	CODIGO Nº	DESCRIPCION	5D01					OBSERVACIONES
1	2D1–21110–30–P0	ARMAZON COMPLETO	1					MBL2
2	2D1–21190–10–P0	CUADRO TRASERO COMPLETA	1					MBL2
3	90157–10001	TORNILLO CABEZA CONICA PLANA	4					
4	95604–10200	TUERCA DE AUTO-CIERRE	4					
5	5YU–2143A–00	TAPA	1					
6	95024–10040	PERNO, DE BRIDA	2					
7	90201–10008	ARANDELA PLANA	2					
8	90110–10005	TORNILLO ALLEN	1					
9	90179–10696	TUERCA	1					
10	5EB–21495–00	PERNO DE AJUSTE	1					
11	90110–10005	TORNILLO ALLEN	1					
12	90179–10696	TUERCA	1					
13	5EB–21495–00	PERNO DE AJUSTE	1					
14	2D1–2117N–00	CUBIERTA 3	1					
15	2D1–2174Y–00	AMORTIGUADOR	1					
16	90480–01333	TAPON	1					
17	90269–06001	REMACHE	2					
18	2D1–2117G–00	PROTECTOR	1					
19	1UA–82591–00	BANDA	2					
20	3YX–21376–00	BANDA DE HERRAMIENTA	1					
21	2D1–24185–00	AMORTIGUADOR DE MONTAJE 5	1					
22	5D0–21345–00	SOPORTE ACCESORIO DE DEPOSITO	1					
23	90149–06026	TORNILLO DE REGLAJE	4					
24	90111–06019	TORNILLO	2					
25	90480–14013	TAPON	2					
26	90387–06026	ESPACIADOR	2					
27	2D1–24129–00	CUBIERTA LATERAL 1	1					

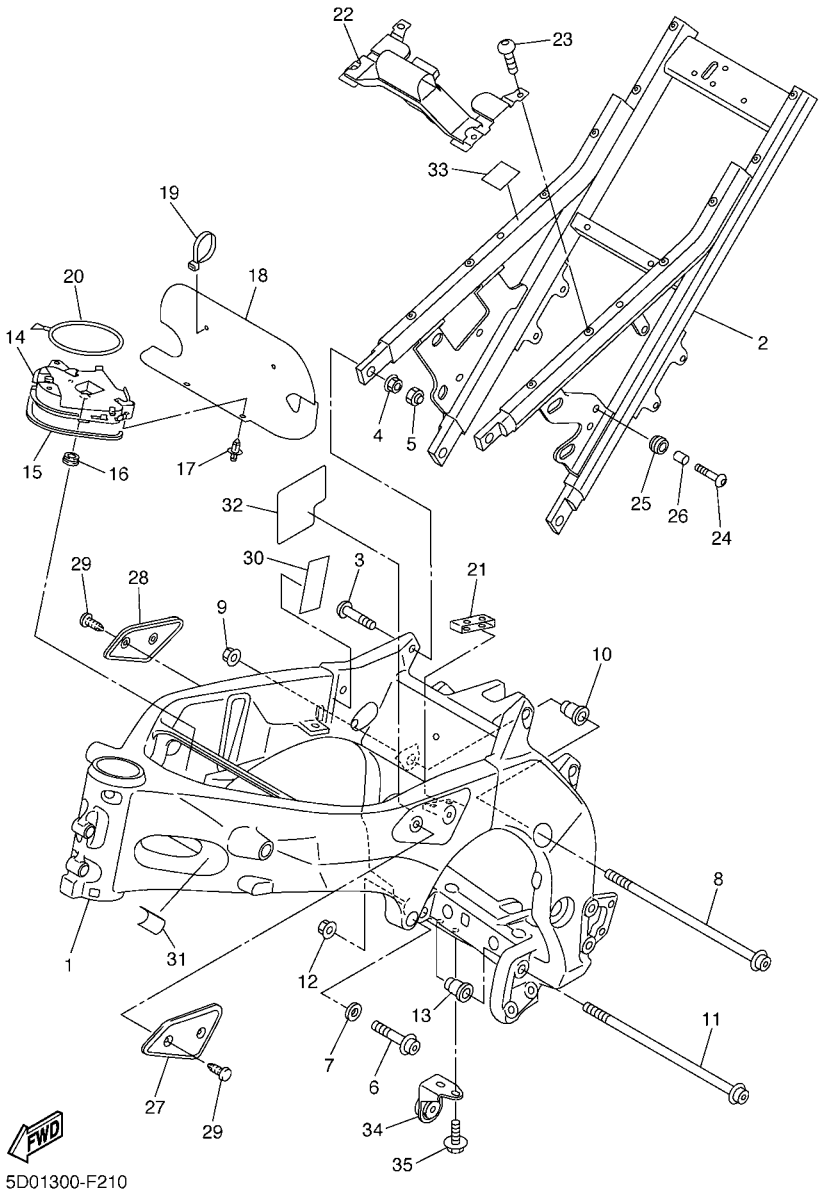

FIG. 21 CUADRO

REF. Nº	CODIGO Nº	DESCRIPCION	5D01					OBSERVACIONES
28	2D1–24139–00	CUBIERTA LATERAL 2	1					
29	90269–06003	REMACHE	4					
30	4PX–23426–00	AMORTIGUADOR	1					
31	3YL–12232–00	AMORTIGUADOR	1					
32	2D1–21575–00	SELLO 1	1					
33	2D1–21268–10	SELLO	1					
34	2D1–27425–02	SOPORTE DE APOYAPIE 2	1					
35	95812–08016	TORNILLO DE REBORDE	2					

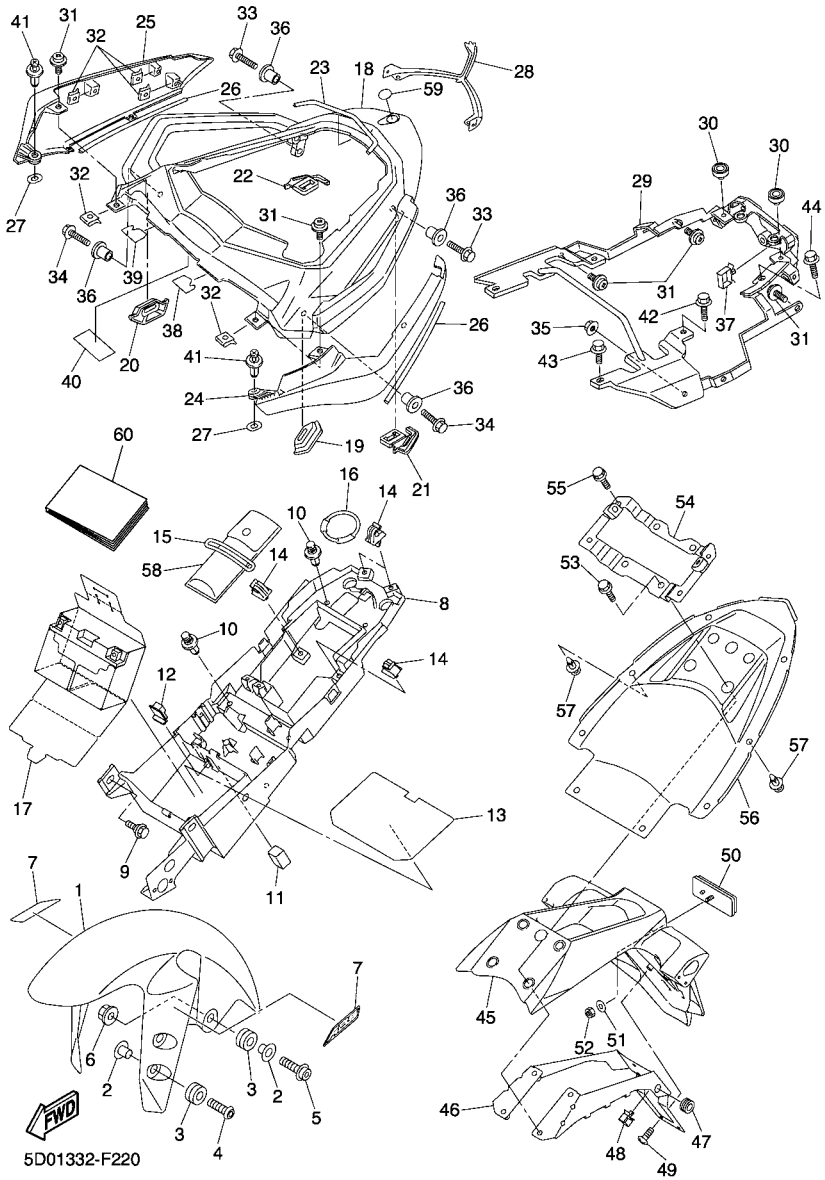

FIG. 22 GUARDABARRO

REF. Nº	CODIGO Nº	DESCRIPCION	5D01					OBSERVACIONES
1	5PW–21511–00–PA	GUARDABARRO DELANTERO	1					PARA DPBMU
	5PW–21511–00–P6	GUARDABARRO DELANTERO	1					PARA BNM5,DRMK
2	90387–065J6	ESPACIADOR	6					
3	90480–12072	TAPON	6					
4	90111–06043	TORNILLO	4					
5	90109–06031	PERNO	2					
6	95607–06200	TUERCA DE AUTO-CIERRE	2					
7	5VS–21578–10	EMBLEMA	2					
8	2D1–8212B–01	CAJA DE BATERIA	1					
9	90109–063F1	PERNO	2					
10	90269–07077	REMACHE	4					
11	2D1–216A2–00	SELLO 2	1					
12	2D1–216A3–00	SELLO 3	1					
13	2D1–24182–00	AMORTIGUADOR DE MONTAJE 2	1					
14	90464–07259	BRIDA	4					
15	4XV–21376–00	BANDA DE HERRAMIENTA	1					
16	2D1–21646–00	BANDA	1					
17	2D1–82122–10	ASIENTO DE BATERIA	1					
18	3C3–24773–00–P0	MANIJA DE ASIENTO	1					UR PARA DPBMU
	3C3–24773–00–P3	MANIJA DE ASIENTO	1					UR PARA BNM5
	3C3–24773–00–P2	MANIJA DE ASIENTO	1					UR PARA DRMK
19	3C3–24723–00	AMORTIGUADOR DE ASIENTO	1					
20	3C3–24724–00	AMORTIGUADOR DE ASIENTO	1					
21	3C3–24737–00	AMORTIGUADOR DE ASIENTO	1					
22	3C3–24747–00	AMORTIGUADOR DE ASIENTO	1					
23	3C3–21541–00	AMORTIGUADOR 1	1					
24	3C3–2471K–00–P0	CUBIERTA, DE COLA 1	1					UR PARA DPBMU

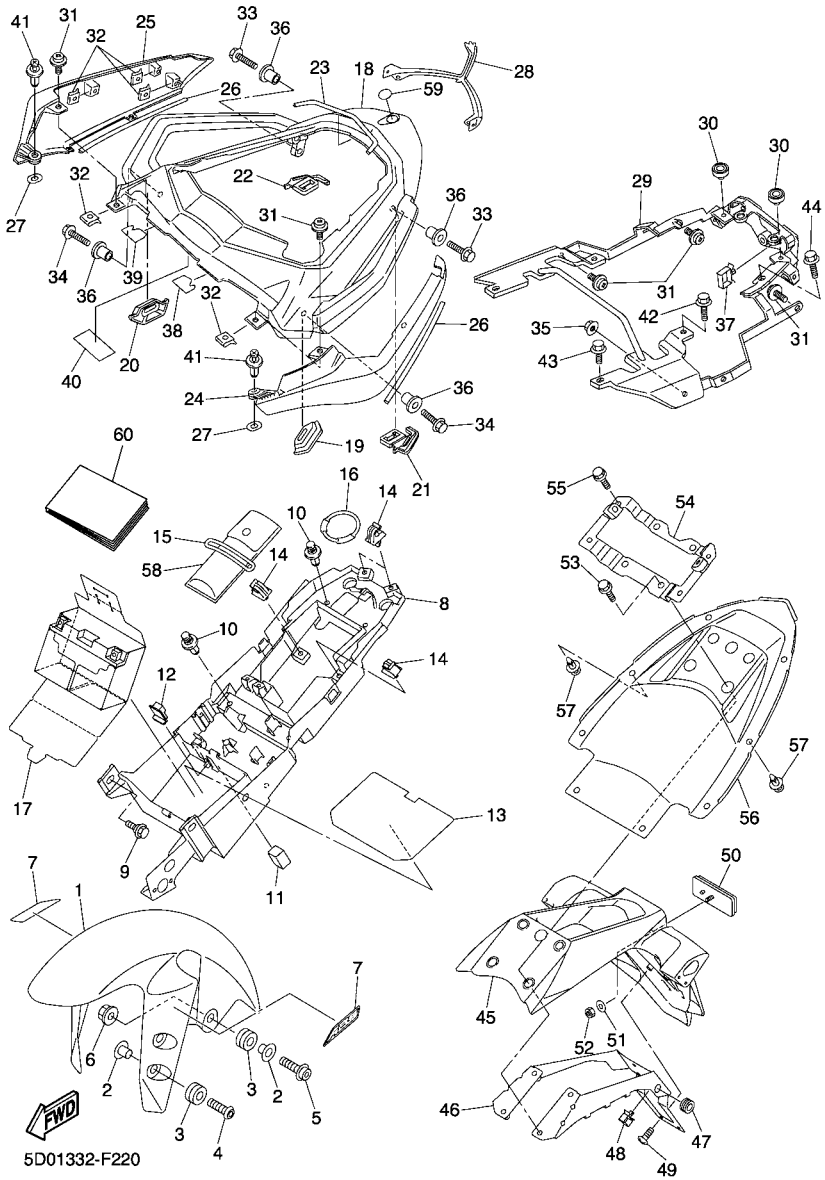

FIG. 22 GUARDABARRO

REF. Nº	CODIGO Nº	DESCRIPCION	5D01					OBSERVACIONES
24	3C3–2471K–00–P3	CUBIERTA, DE COLA 1	1					UR PARA BNM5
	3C3–2471K–00–P2	CUBIERTA, DE COLA 1	1					UR PARA DRMK
25	3C3–2472K–00–P0	CUBIERTA, DE COLA 2	1					UR PARA DPBMU
	3C3–2472K–00–P3	CUBIERTA, DE COLA 2	1					UR PARA BNM5
	3C3–2472K–00–P2	CUBIERTA, DE COLA 2	1					UR PARA DRMK
26	3C3–2193A–00	BOBINA CONJUNTO	2					
27	5PW–2174X–00	AMORTIGUADOR	2					
28	3C3–2163A–00	CUBIERTA TRAS GUARDABARRO 1	1					
29	3C3–21617–00	SOPORTE DE GUARDABARRO	1					
30	22W–24741–00	COJIN DE ASIENTO	2					
31	90159–05083	TORNILLO CON VALONA	8					
32	90183–05024	TUERCA DE RESORTE	8					
33	95822–08025	TORNILLO DE REBORDE	2					
34	95822–08030	TORNILLO DE REBORDE	2					
35	95702–08500	TUERCA DE REBORDE	2					
36	90387–09003	ESPACIADOR	4					
37	90464–16021	BRIDA	1					
38	3C3–22825–00	PROTECTOR 1	1					
39	3C3–22826–00	PROTECTOR 2	1					
40	2D1–21639–00	AMORTIGUADOR 2	1					
41	90269–07076	REMACHE	2					
42	95827–06025	TORNILLO	2					
43	95822–06014	TORNILLO DE REBORDE	2					
44	90105–08447	TORNILLO	2					
45	2D1–21629–00	GUARDABARRO INFERIOR	1					
46	2D1–21688–00	SOPORTE	1					
47	90480–13004	TAPON	2					

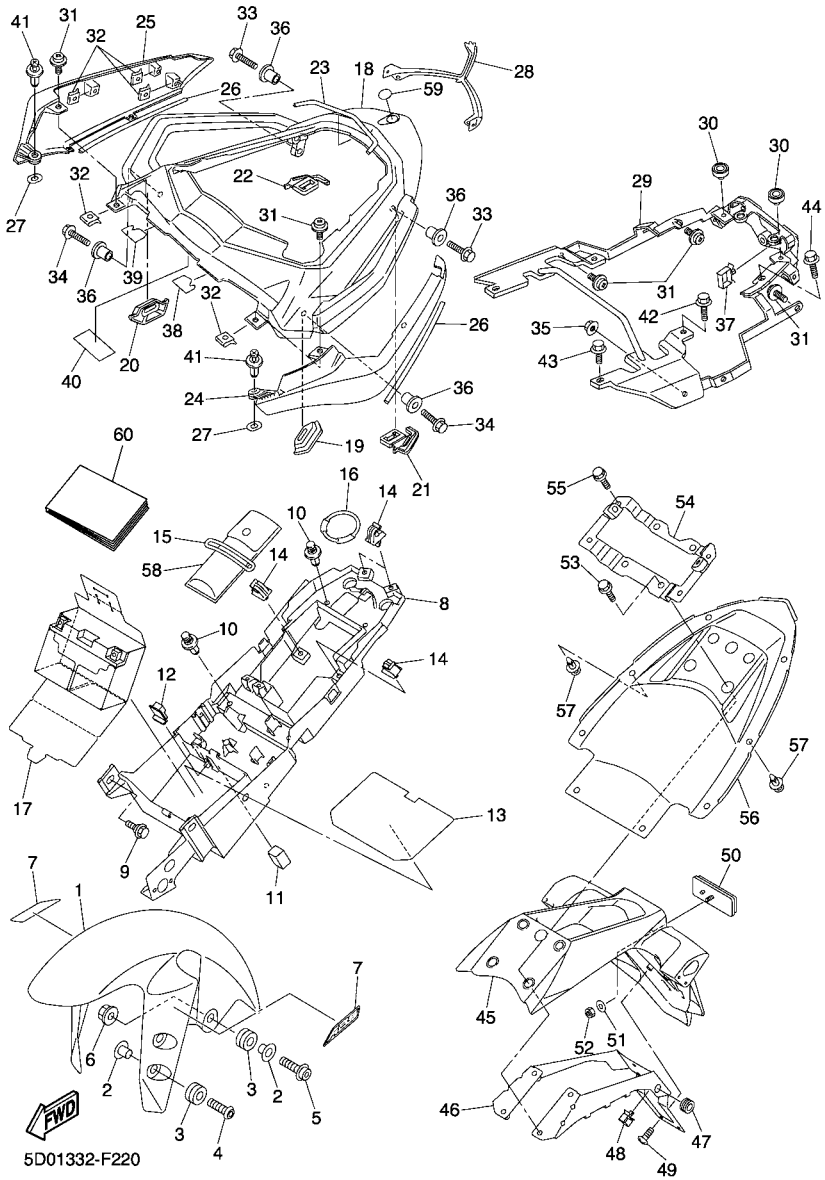

FIG. 22 GUARDABARRO

REF. Nº	CODIGO Nº	DESCRIPCION	5D01					OBSERVACIONES
48	90464–16021	BRIDA	1					
49	97707–50016	TORNILLO	6					
50	3Y6–85130–02	REFLECTOR TRASERO COMPLETO	1					
51	90201–05725	ARANDELA PLANA	1					
52	95607–05100	TUERCA AUTOBLOCANTE	1					
53	95817–08025	TORNILLO	4					
54	3C3–21261–00	SOPORTE GUARDABARRO TRASERO	1					
55	95827–06020	TORNILLO	4					
56	3C3–21611–00	GUARDABARRO TRASERO	1					
57	90269–07077	REMACHE	8					
58	2D1–28100–00	JUEGO DE HERRAMIENTAS	1					
59	4KN–2836B–00	MARCA	1					
60	5D0–F8199–S0	MANUAL DEL PROPRIETARIO	1					

FIG. 23 CUBIERTA LATERAL

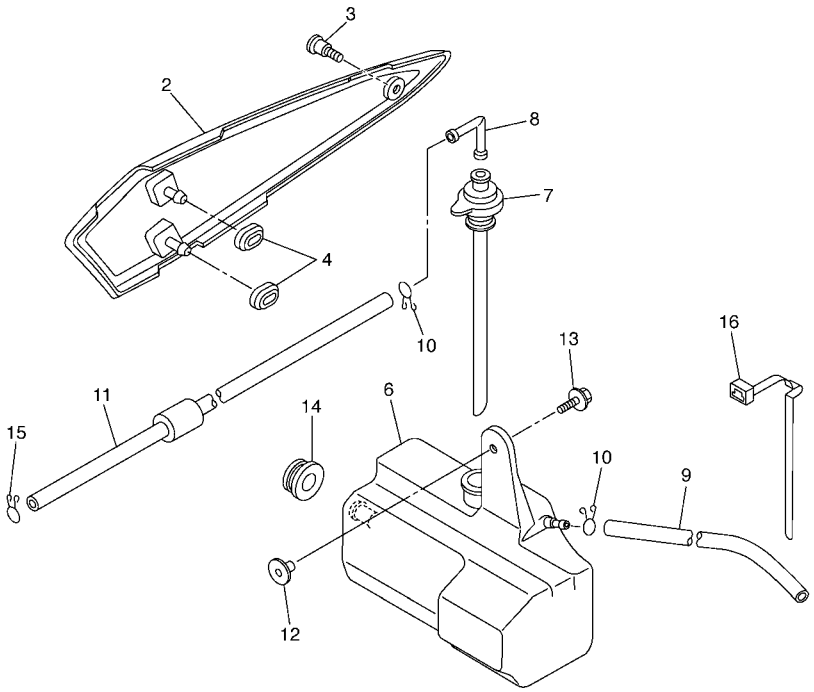

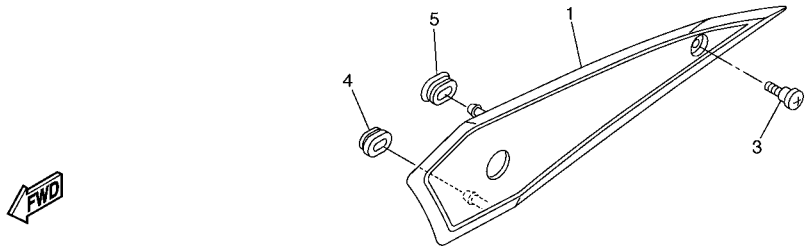

5D01300-F230

REF. Nº	CODIGO Nº	DESCRIPCION	5D01					OBSERVACIONES
1	2D1–21711–00	CUBIERTA LATERAL 1	1					
2	5D0–21721–00	CUBIERTA LATERAL 2	1					
3	90149–06165	TORNILLO DE REGLAJE	2					
4	90480–01559	TAPON	3					
5	2D1–21719–00	ANILLO PROTECTOR	1					
6	2D1–21871–00	TANQUE DE RECUPERACION	1					
7	5VY–21875–00	TAPA	1					
8	26H–21828–00	CODO	1					
9	90445–08022	TUBO	1					
10	90467–08075	PRESILLA	2					
11	90445–087K6	TUBO (L700)	1					
12	90387–062M9	ESPACIADOR	1					
13	90119–06228	TORNILLO CON ARANDELA	1					
14	90480–20001	TAPON	1					
15	90467–08075	PRESILLA	1					
16	90464–07M40	BRIDA	1					

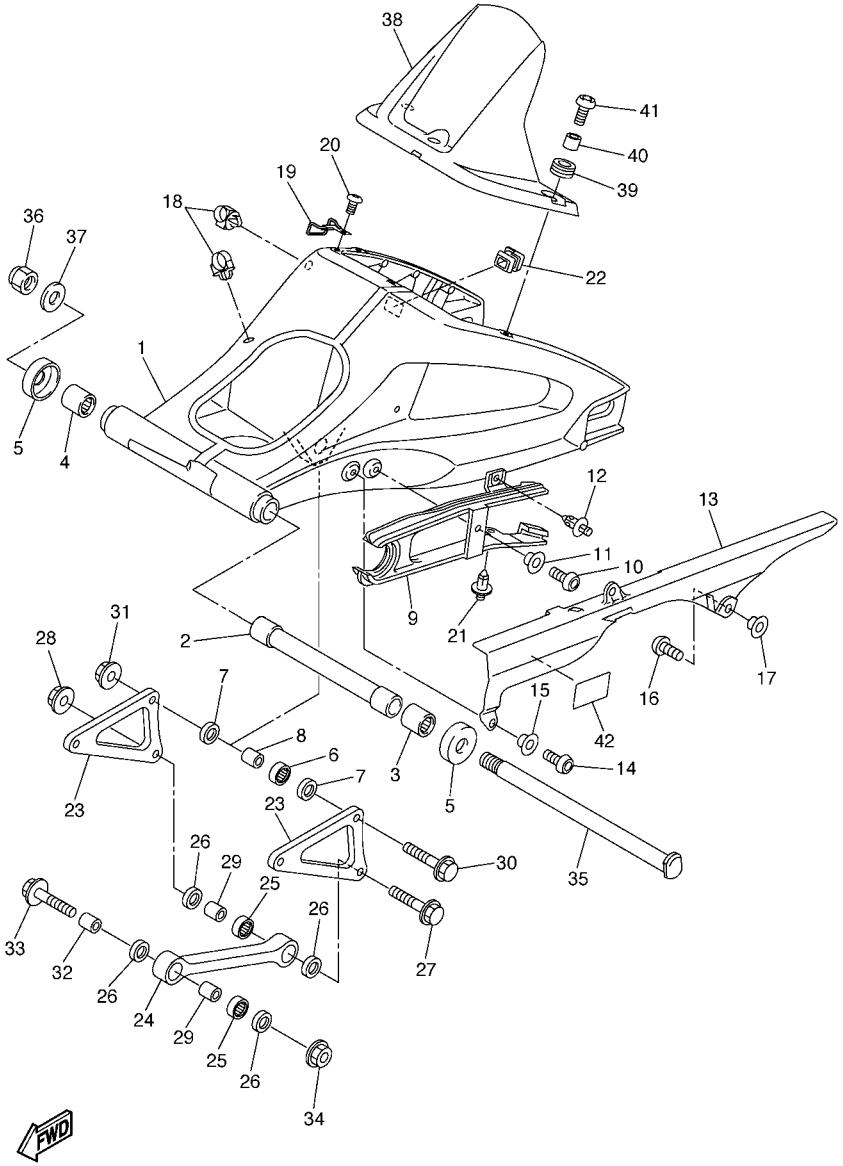

FIG. 24 BRAZO TRASERO

REF. Nº	CODIGO Nº	DESCRIPCION	5D01					OBSERVACIONES
1	5D0–22110–00	BRAZO TRASERO COMPLETO	1					
2	2D1–22184–00	BUJE	1					
3	93317–42599	COJINETE	1					
4	93315–42536	COJINETE DE RODILLOS	1					
5	5JJ–22128–00	TAPA DE EMPIJE 1	2					
6	93315–41762	COJINETE DE RODILLOS	1					
7	93109–17071	SELLO ACEITE	2					
8	90387–1012A	ESPACIADOR	1					
9	2D1–22151–00	SELLO DE GUARDA	1					
10	92012–06014	PERNO	1					
11	90387–06130	ESPACIADOR	1					
12	90269–07007	REMACHE	1					
13	5SL–22311–00	CABRECADENA	1					
14	92012–06014	PERNO	1					
15	90387–06130	ESPACIADOR	1					
16	90110–06102	TORNILLO ALLEN	2					
17	90387–06009	ESPACIADOR	2					
18	90464–17003	BRIDA	2					
19	2D1–25887–00	SOPORTE DE MANGUERA FRENO	1					
20	92012–06014	PERNO	1					
21	90269–07008	REMACHE	1					
22	2D1–22117–00	TAPA	1					
23	2D1–2217A–00	BRAZO REEURIO	2					
24	2D1–2217M–00	BRAZO 1	1					
25	93315–31758	COJINETE DE RODILLOS	2					
26	93109–17071	SELLO ACEITE	4					
27	90105–10030	TORNILLO	1					

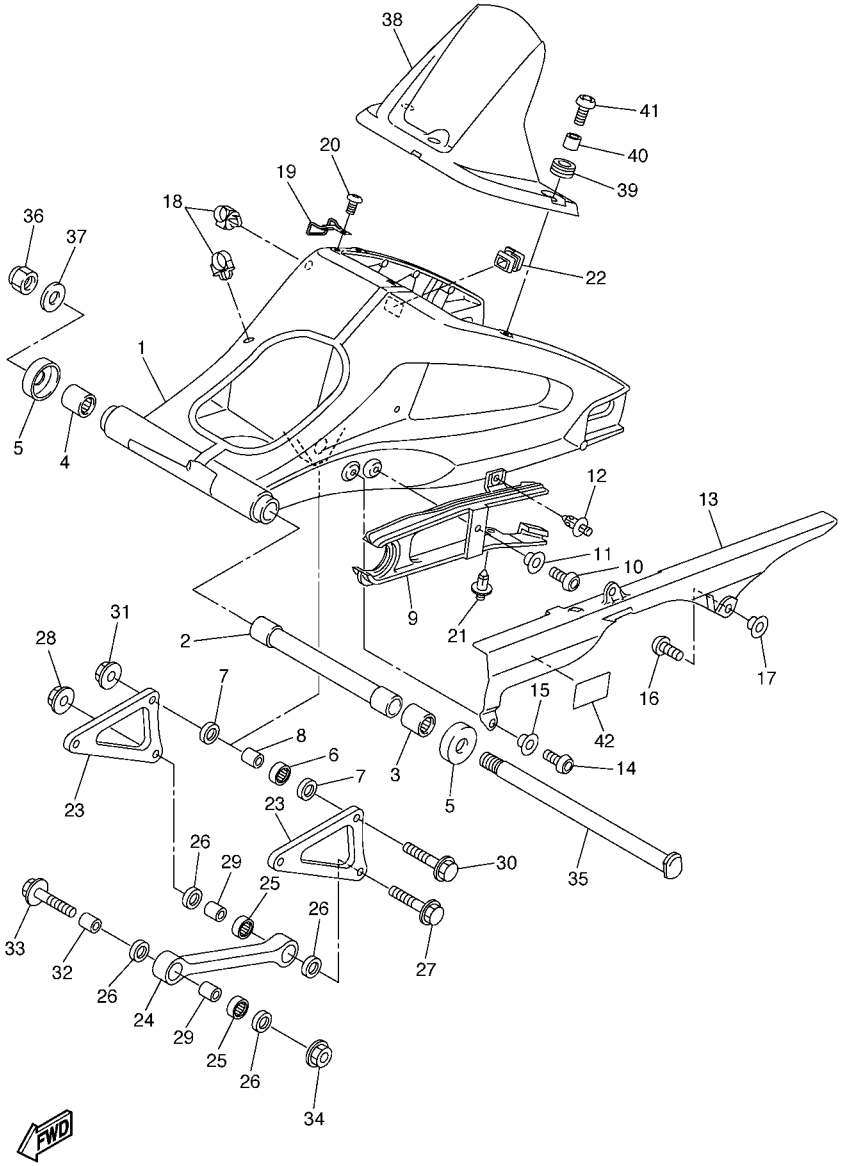

FIG. 24 BRAZO TRASERO

REF. Nº	CODIGO Nº	DESCRIPCION	5D01					OBSERVACIONES
28	95607–10200	TUERCA DE AUTO-CIERRE	1					
29	90387–1012A	ESPACIADOR	2					
30	90105–10030	TORNILLO	2					
31	95607–10200	TUERCA DE AUTO-CIERRE	2					
32	90387–10043	ESPACIADOR	1					
33	90105–10323	TORNILLO	1					
34	95607–10200	TUERCA DE AUTO-CIERRE	1					
35	2D1–22141–00	EJE DEL BARCULANTE	1					
36	90185–18167	TUERCA AUTOBLOCANTE	1					
37	90201–18013	ARANDELA PLANA	1					
38	2D1–21650–00	GUARDABARRO TRANSERO COMP.	1					
39	90480–12003	TAPON	3					
40	90387–0600V	ESPACIADOR	3					
41	90149–06302	TORNILLO DE REGLAJE	3					
42	5VY–21668–00	ETIQUETA DE FRANJA	1					

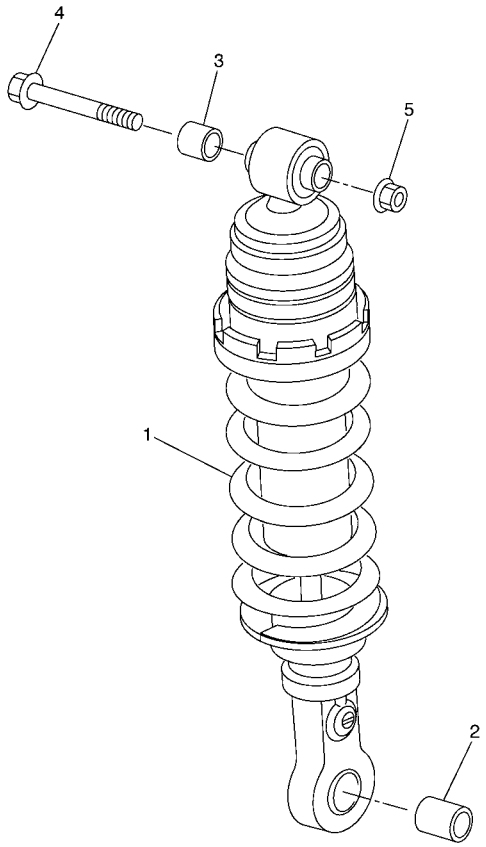

2D11300-E250

FIG. 25 SUSPENSION TRASERO

REF. Nº	CODIGO Nº	DESCRIPCION	5D01					OBSERVACIONES
1	5D0–22210–00	AMORTIGUADOR TRASERO COMPLETO	1					
2	90387–1012A	ESPACIADOR	1					
3	90387–10043	ESPACIADOR	1					
4	90105–10323	TORNILLO	1					
5	95607–10200	TUERCA DE AUTO-CIERRE	1					

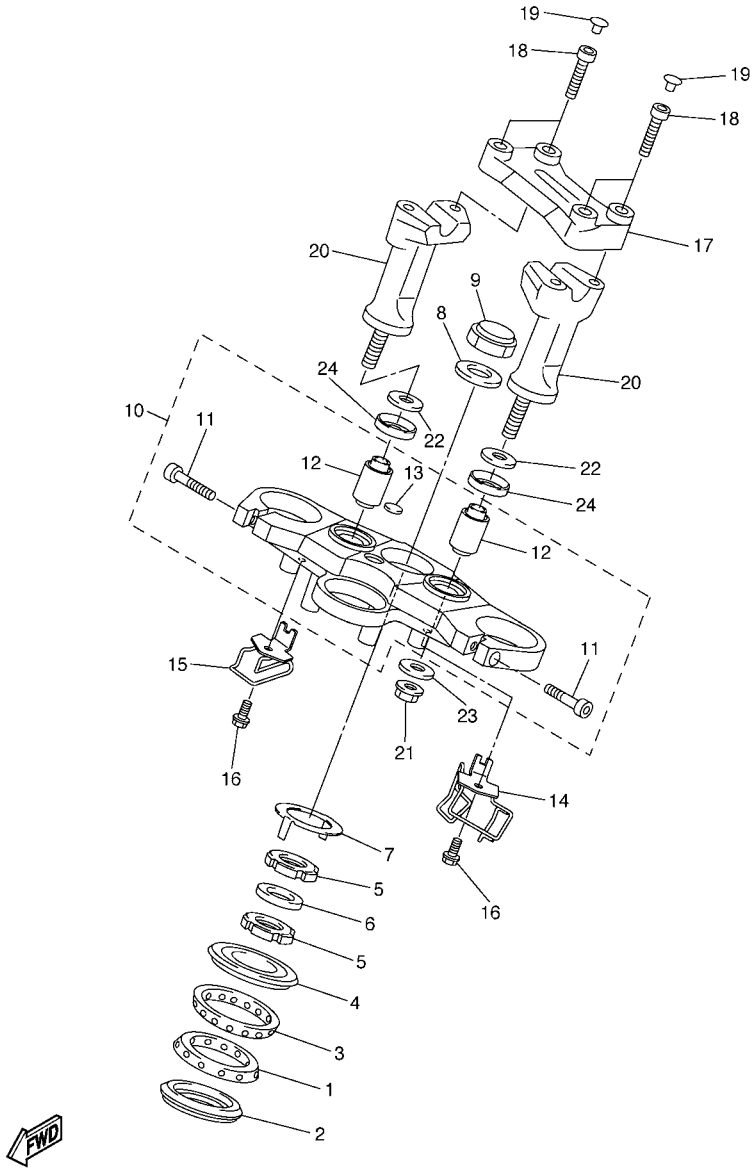

5D01300-F260

FIG. 26 DIRECCION

REF. Nº	CODIGO Nº	DESCRIPCION	5D01					OBSERVACIONES
1	93399–99957	COJINETE	1					
2	3FV–23462–00	RETEN DE DIRECCION	1					
3	93399–99932	COJINETE	1					
4	4XV–23415–01	CUBIERTA DE PISTA DE BOLAS 1	1					
5	90179–30691	TUERCA	2					
6	90202–30235	ARANDELA DE PLANA	1					
7	4XV–23418–00	ARANDELA ESPECIAL	1					
8	90201–281U8	ARANDELA PLANA	1					
9	90176–28083	TUERCA CORONA	1					
10	2D1–23405–00	PLATINA SUPERIOR	1					
11	91314–08030	.PERNO	2					
12	3VD–23434–00	.SOPORTE DE AMORTIGUADOR	2					
13	4XV–2341B–00	.EMBLEMA	1					
14	3C3–23318–00	SOSTEN DE CABLE 1	1					
15	5D0–23319–00	SOSTEN DE CABLE 2	1					
16	90105–06050	TORNILLO	2					
17	2D1–23441–00	SOPORTE DE MANUBRIO	1					
18	91317–08030	PERNO	4					
19	90338–08163	TAPON	4					
20	2D1–23442–00	SOPORTE DE MANUBRIO INFERIOR	2					
21	95607–10200	TUERCA DE AUTO-CIERRE	2					
22	92907–10200	ARANDELA	2					
23	90201–10141	ARANDELA PLANA	2					
24	5YU–23445–00	AMORTIGUADOR	2					

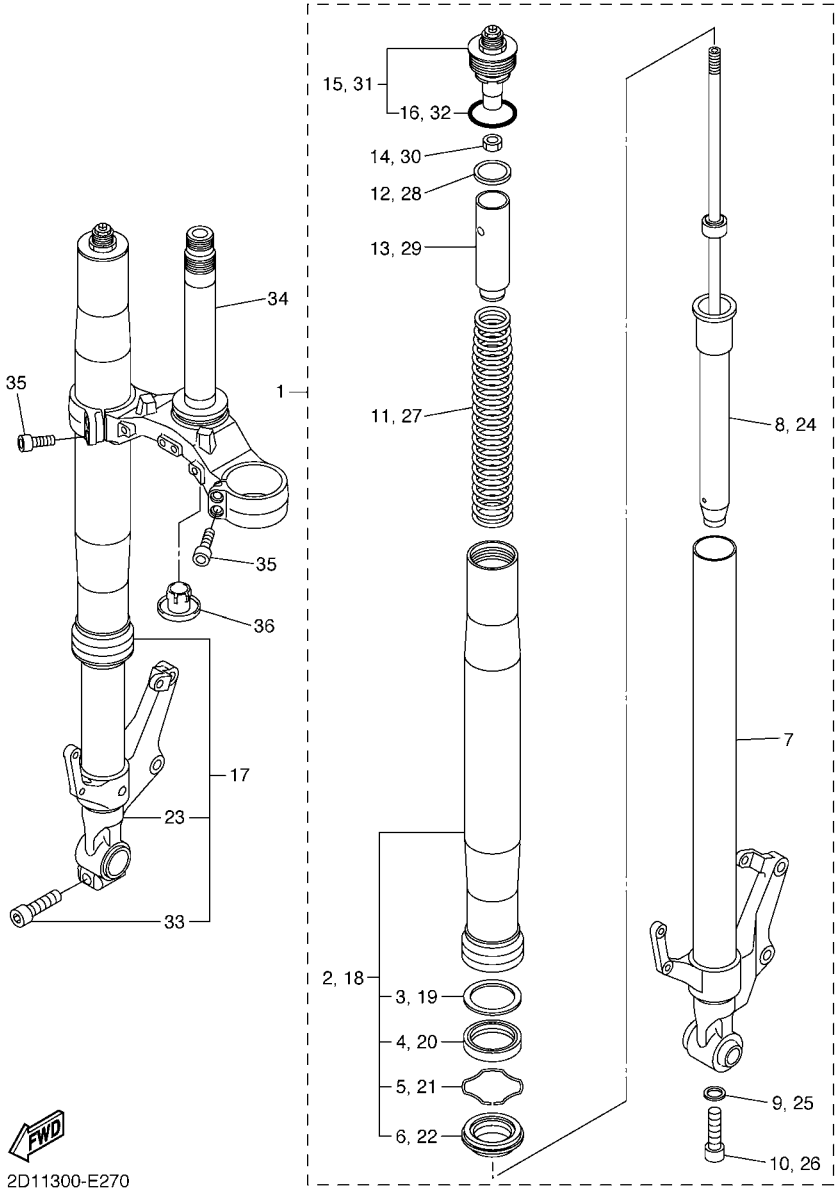

FIG. 27 HORQUILLA DELANTERA

REF. Nº	CODIGO Nº	DESCRIPCION	5D01					OBSERVACIONES
1	5D0–23102–00	HORQUILLA DELANTERA COMPL.(MI)	1					
2	2D1–23136–10	.TUBO EXTERIOR	1					
3	4V4–23146–L0	..ARANDELA DE SELLO DE ACEITE	1					
4	4PU–23145–01	..RETEN DE ACEITE	1					
5	4V4–23153–L0	..ANILLO DE ENGANCHE	1					
6	4PU–23144–00	..GUARDAPOLVO	1					
7	5D0–23110–00	.TUBO INTERIOR COMPLETO 1	1					
8	2D1–23170–11	.CILINDRO COMPL DE HORQ DELAN	1					
9	509–23158–L0	.EMPAQUE	1					
10	3D8–23181–00	.TORNILLO CABEZAHEXAGONAL	1					
11	2D1–23141–00	.RESORTE HORQUILLA DELANT.	1					
12	5VY–12277–00	.ARANDELA	1					
13	5VY–23118–00	.SEPARADOR	1					
14	3LC–23357–00	.TUERCA	1					
15	2D1–23111–10	.TAPON	1					
16	3XJ–23147–L0	..ARO	1					
17	5D0–23103–00	HORQUILLA DELANTERA COMPL.(MD)	1					
18	2D1–23136–10	.TUBO EXTERIOR	1					
19	4V4–23146–L0	..ARANDELA DE SELLO DE ACEITE	1					
20	4PU–23145–01	..RETEN DE ACEITE	1					
21	4V4–23153–L0	..ANILLO DE ENGANCHE	1					
22	4PU–23144–00	..GUARDAPOLVO	1					
23	5D0–23120–00	.TUBO INTERIOR COMPLETO 2	1					
24	2D1–23170–01	.CILINDRO COMPL DE HORQ DELAN	1					
25	509–23158–L0	.EMPAQUE	1					
26	3D8–23181–00	.TORNILLO CABEZAHEXAGONAL	1					
27	2D1–23141–00	.RESORTE HORQUILLA DELANT.	1					

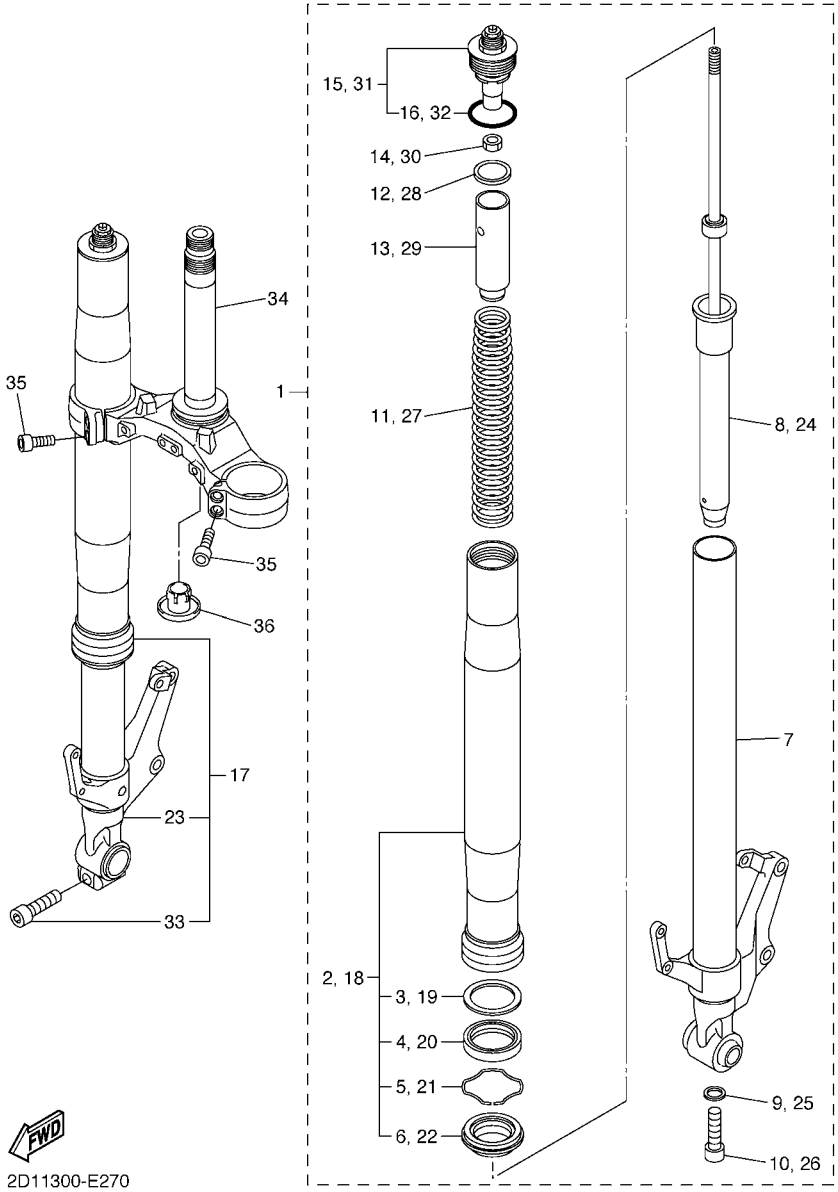

FIG. 27 HORQUILLA DELANTERA

REF. Nº	CODIGO Nº	DESCRIPCION	5D01					OBSERVACIONES
28	5VY–12277–00	.ARANDELA	1					
29	5VY–23118–00	.SEPARADOR	1					
30	3LC–23357–00	.TUERCA	1					
31	2D1–23111–10	.TAPON	1					
32	3XJ–23147–L0	..ARO	1					
33	91314–08040	.PERNO	1					
34	2D1–23340–00	PLATINA INFERIOR COMPLETA	1					
35	91314–08030	PERNO	4					
36	4KM–23123–01	CUBIERTA INFERIOR 1	1					

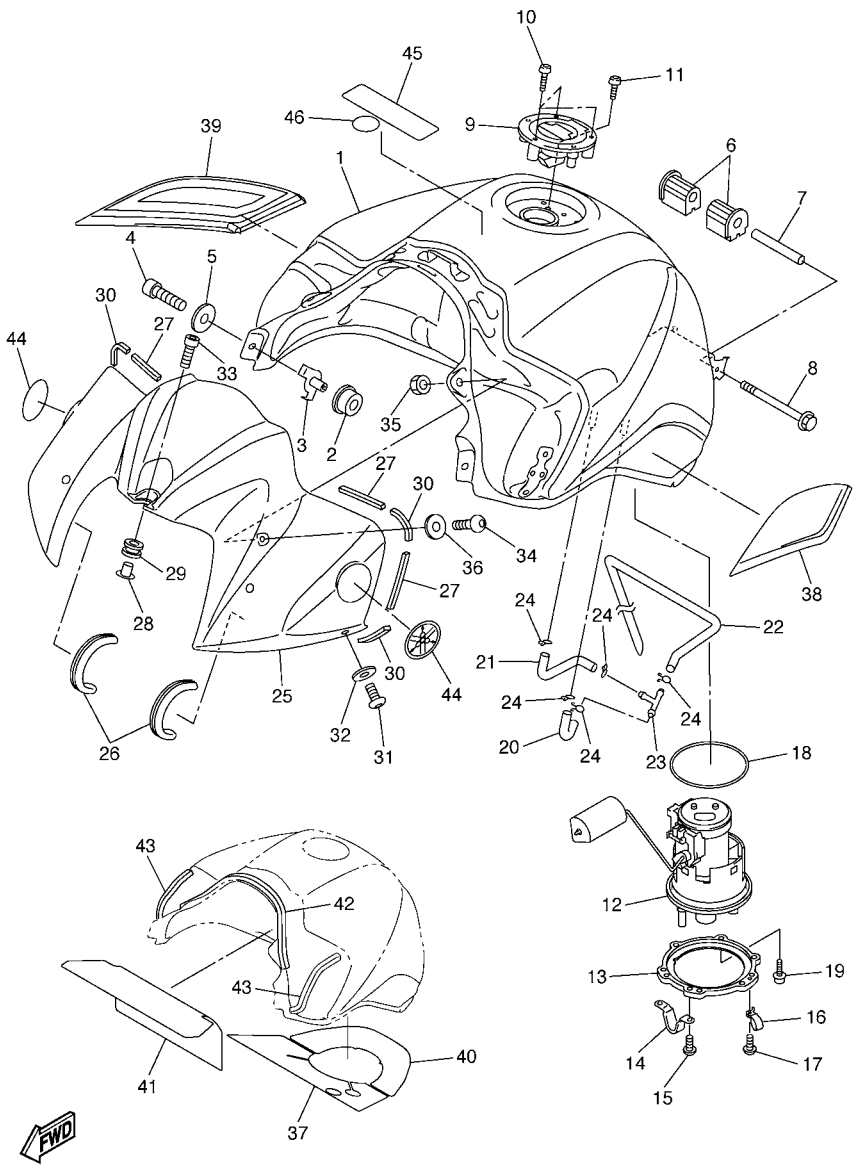

FIG. 28 DEPOSITO DE COMBUSTIBLE

REF. Nº	CODIGO Nº	DESCRIPCION	5D01					OBSERVACIONES
1	2D1–YK241–00–P3	DEPOSITO DE COMBUSTIBLE COMP.	1					UR PARA DPBMU
	2D1–YK241–00–P5	DEPOSITO DE COMBUSTIBLE COMP.	1					UR PARA BNM5
	2D1–YK241–00–P4	DEPOSITO DE COMBUSTIBLE COMP.	1					UR PARA DRMK
2	5VY–24181–00	AMORTIGUADOR DE MONTAJE 1	2					
3	2D1–2412G–00	COLLAR	2					
4	91317–06016	PERNO	2					
5	90201–060A3	ARANDELA PLANA	2					
6	5VX–24181–00	AMORTIGUADOR DE MONTAJE 1	2					
7	90387–061W6	ESPACIADOR	1					
8	91317–06090	PERNO	1					
9	5JJ–24602–00	TAPON COMPLETO	1					
10	90110–05112	TORNILLO ALLEN	3					
11	91317–05010	PERNO	1					
12	2D1–13907–01	BOMBA DE COMBUSTIBLE COMPLETA	1					
13	2D1–24491–00	SOPORTE BOMBA COMBUSTIBLE	1					
14	2D1–24192–00	SOPORTE DE DEPOSITO COMBUST.2	1					
15	98907–05008	TORNILLO DE LIGAR	2					
16	90461–10010	GRAPA	1					
17	90154–05012	TORNILLO DE LIGAR	1					
18	5JW–24486–00	ANILLO O	1					
19	90110–05014	TORNILLO ALLEN	6					
20	2D1–24315–00	TUBO DE DESAGUE	1					
21	2D1–24316–00	TUBO 6	1					
22	2D1–24317–00	TUBO 7	1					
23	90413–07007	UNION	1					
24	90467–09006	PRESILLA	5					
25	3C3–2171A–00–P0	CUBIERTA, TECHO	1					PARA DPBMU

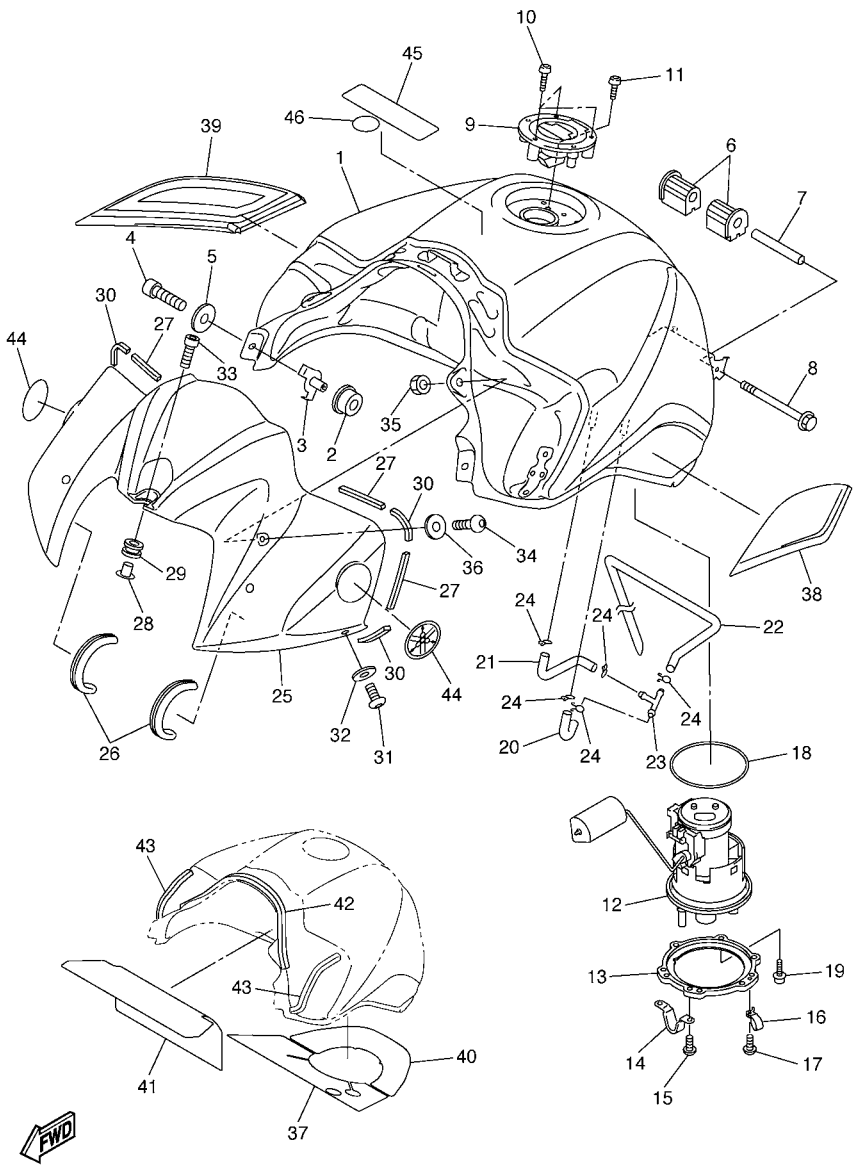

FIG. 28 DEPOSITO DE COMBUSTIBLE

REF. Nº	CODIGO Nº	DESCRIPCION	5D01					OBSERVACIONES
25	3C3–2171A–00–P3	CUBIERTA, TECHO	1					PARA BNM5,DRMK
26	2D1–28345–01	MOLDURA 1	2					
27	4XV–2834E–00	AMORTIGUADOR 1	4					
28	90387–062Y6	ESPACIADOR	1					
29	90480–12314	TAPON	1					
30	2D1–24181–00	AMORTIGUADOR DE MONTAJE 1	4					
31	90111–05019	TORNILLO	2					
32	90202–05224	ARANDELA DE PLANA	2					
33	90110–06233	TORNILLO ALLEN	1					
34	90111–05024	TORNILLO	2					
35	90179–05003	TUERCA	2					
36	90202–05088	ARANDELA DE PLANA	2					
37	2D1–2414N–00	EQUILIBRIO, CUBIERTA	1					
38	2D1–24106–00	CUBIERTA LATERAL COMPLETA 1	1					
39	2D1–24108–00	CUBIERTA LATERAL COMPLETA 2	1					
40	2D1–2414K–00	EQUILIBRIO, CUBIERTA 3	1					
41	2D1–2414H–00	EQUILIBRIO, CUBIERTA	1					
42	2D1–2414P–00	EQUILIBRIO, CUBIERTA	1					
43	2D1–2414R–00	EQUILIBRIO, CUBIERTA	2					
44	5SL–2413B–00	EMBLEMA	2					
45	5PA–21568–00	ETIQUETA DE PRECAUCION	1					
46	3ME–2415E–01	EMBLEMA DE PRECAUCTON	1					

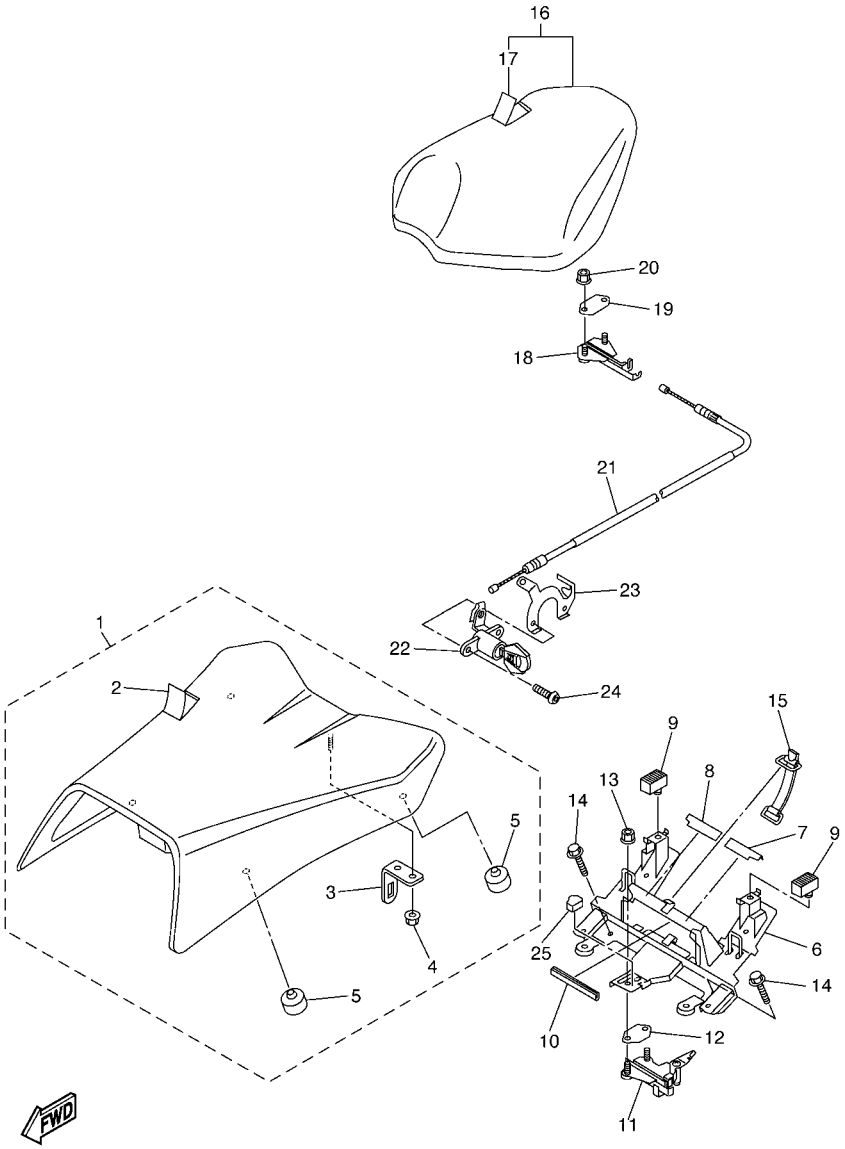

3C3D100-F290

FIG. 29 ASIENTO

REF. Nº	CODIGO Nº	DESCRIPCION	5D01					OBSERVACIONES
1	2D1–24710–00	ASIENTO SIMPLE COMPLETO	1					
2	2D1–24711–00	.CUBIERTA DE ASIENTO SIMPLE	1					
3	4HM–24728–00	.SOPORTE DE ASIENTO	1					
4	95607–06200	.TUERCA DE AUTO-CIERRE	1					
5	278–27114–00	.TOPE DE PUNTAL PRINCIPAL	4					
6	3C3–21341–01	SOPORTE DE ASIENTO 1	1					
7	2D1–2476U–00	PROTECTOR	1					
8	2D1–2476V–00	PROTECTOR2	1					
9	3C3–24741–00	COJIN DE ASIENTO	2					
10	2D1–24785–00	MOLDURA DE ASIENTO	1					
11	2D1–24780–02	CERRADURA SILLIN COMPLETO	1					
12	4BP–24792–00	PLACA	1					
13	95702–06500	TUERCA DE REBORDE	2					
14	95827–06020	TORNILLO	2					
15	18G–82131–00	TIRANTE DE BATERIA	1					
16	3C3–24750–00	ASIENTO TANDEM COMPLETO	1					
17	3C3–24751–00	.CUBIERTA DE ASIENTO TANDEM	1					
18	4BP–24780–00	CERRADURA SILLIN COMPLETO	1					
19	4BP–24792–00	PLACA	1					
20	95702–06500	TUERCA DE REBORDE	2					
21	2D1–2478E–00	CABLE	1					
22	2TV–W2470–00	ASIENTO DE CIERRE COMPLETO	1					
23	4XV–2117K–00	SOPORTE DE CERRADURA	1					
24	90149–06006	TORNILLO DE REGLAJE	2					
25	2D1–24665–00	AMORTIGUADOR	1					

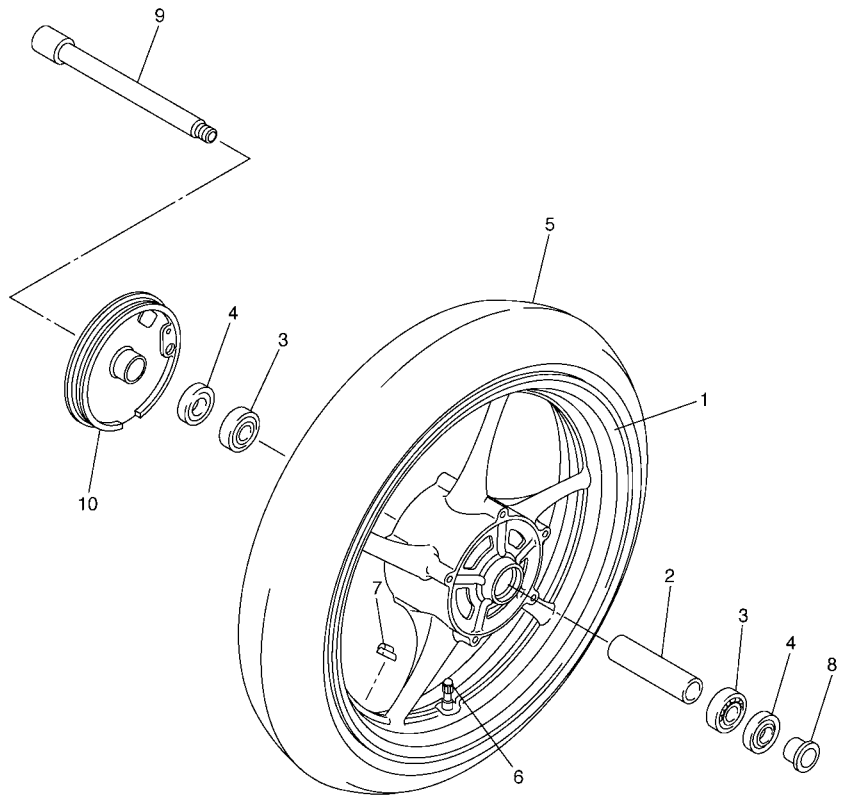

4P51300-E290

FIG. 30 RUEDA DELANTERA

REF. Nº	CODIGO Nº	DESCRIPCION	5D01					OBSERVACIONES
1	5D0–W2516–00–98	RUEDA FUNDIDA DELANTERA	1					LGB
2	5EA–25117–00	ESPACIADOR DE COJINETE	1					
3	93306–00420	COJINETE	2					
4	93106–28043	SELLO ACEITE	2					
5	94112–17094	NEUMATICO(120/70 ZR17M/C 58W)	1					UR DUNLOP
	*	NEUMATICO(120/70 ZR17M/C 58W)	1					UR LM MICHELIN
6	93900–00030	VALVULA DE ARO (TR412)	1					TAIHEIYO
7	5MT–25398–00	BALANCEADOR DE RUEDA (10G)	1					UN
	5MT–25398–10	BALANCEADOR DE RUEDA (20G)	1					UN
	5MT–25398–20	BALANCEADOR DE RUEDA (30G)	1					UN
8	90387–22002	ESPACIADOR	1					
9	4XV–25181–10	EJE DE LA RUEDA	1					
10	4P5–2517A–00–98	CAJA DE SENSOR	1					LGB

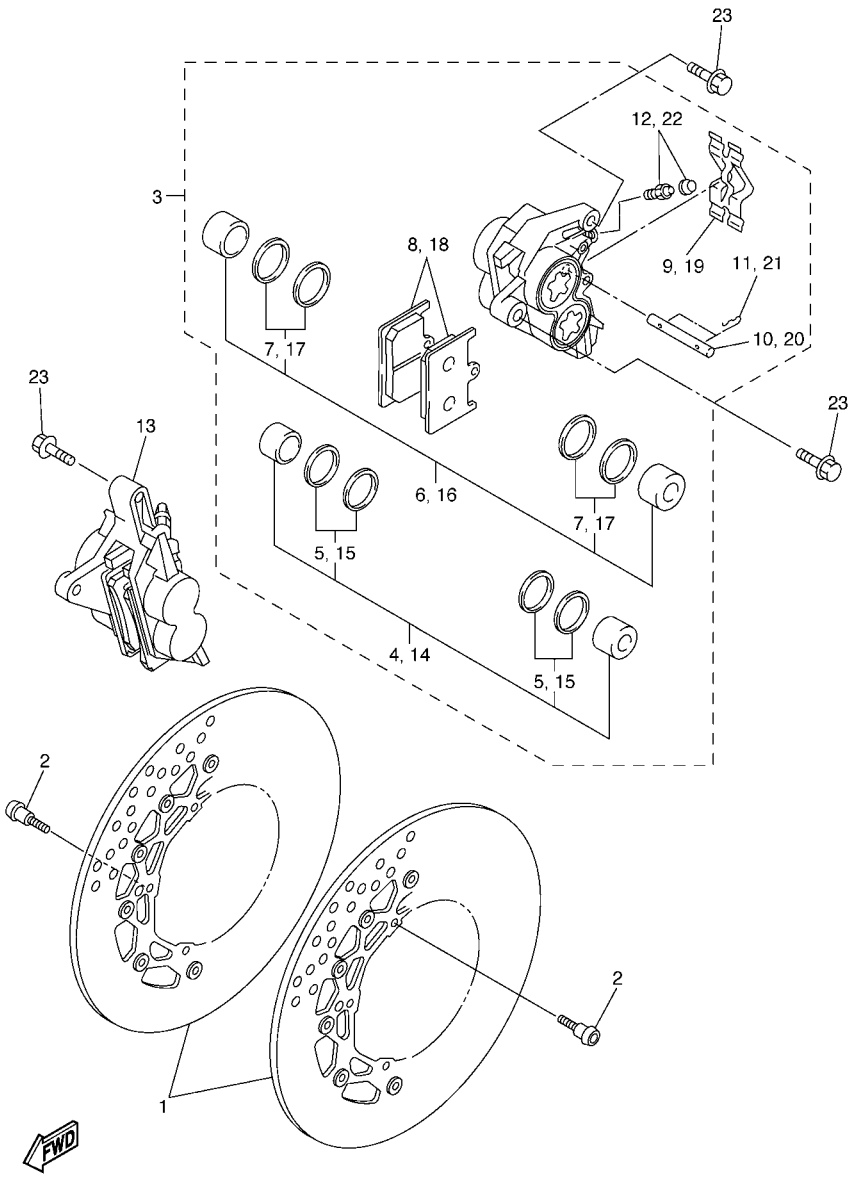

FIG. 31 CALIBRE FRENO DELANTERA

REF. Nº	CODIGO Nº	DESCRIPCION	5D01					OBSERVACIONES
1	5D0–2581T–00	DISCO DE FRENO	2					
2	90149–06043	TORNILLO DE REGLAJE	10					
3	2D1–2580T–00	CALIBRE COMPLETO (IZQUIERDO)	1					
4	4SV–W0057–00	.PISTON COMPLETO PINZA	1					
5	3MA–W0047–10	..JUEGO DE RETENES DE PINZA	1					
6	4SV–W0057–10	.PISTON COMPLETO PINZA	1					
7	3GM–W0047–10	..JUEGO DE RETENES DE PINZA	1					
8	5SL–W0045–00	.JUEGO DE COJIN DE FRENO	1					
9	4SV–25919–00	.SOPORTE DE PASTILLAS	1					
10	4SV–25924–00	.PASADOR	1					
11	3GM–25925–00	.PRESILLA	2					
12	1J3–W0048–00	.CJTO TORNILLO DE PURGA	1					
13	5D0–2580U–00	CALIBRE COMPLETO (DERECHO)	1					
14	4SV–W0057–00	.PISTON COMPLETO PINZA	1					
15	3MA–W0047–10	..JUEGO DE RETENES DE PINZA	1					
16	4SV–W0057–10	.PISTON COMPLETO PINZA	1					
17	3GM–W0047–10	..JUEGO DE RETENES DE PINZA	1					
18	5SL–W0045–00	.JUEGO DE COJIN DE FRENO	1					
19	4SV–25919–00	.SOPORTE DE PASTILLAS	1					
20	4SV–25924–00	.PASADOR	1					
21	3GM–25925–00	.PRESILLA	2					
22	5VS–W0048–00	.CJTO TORNILLO DE PURGA	1					
23	90105–10638	TORNILLO	4					

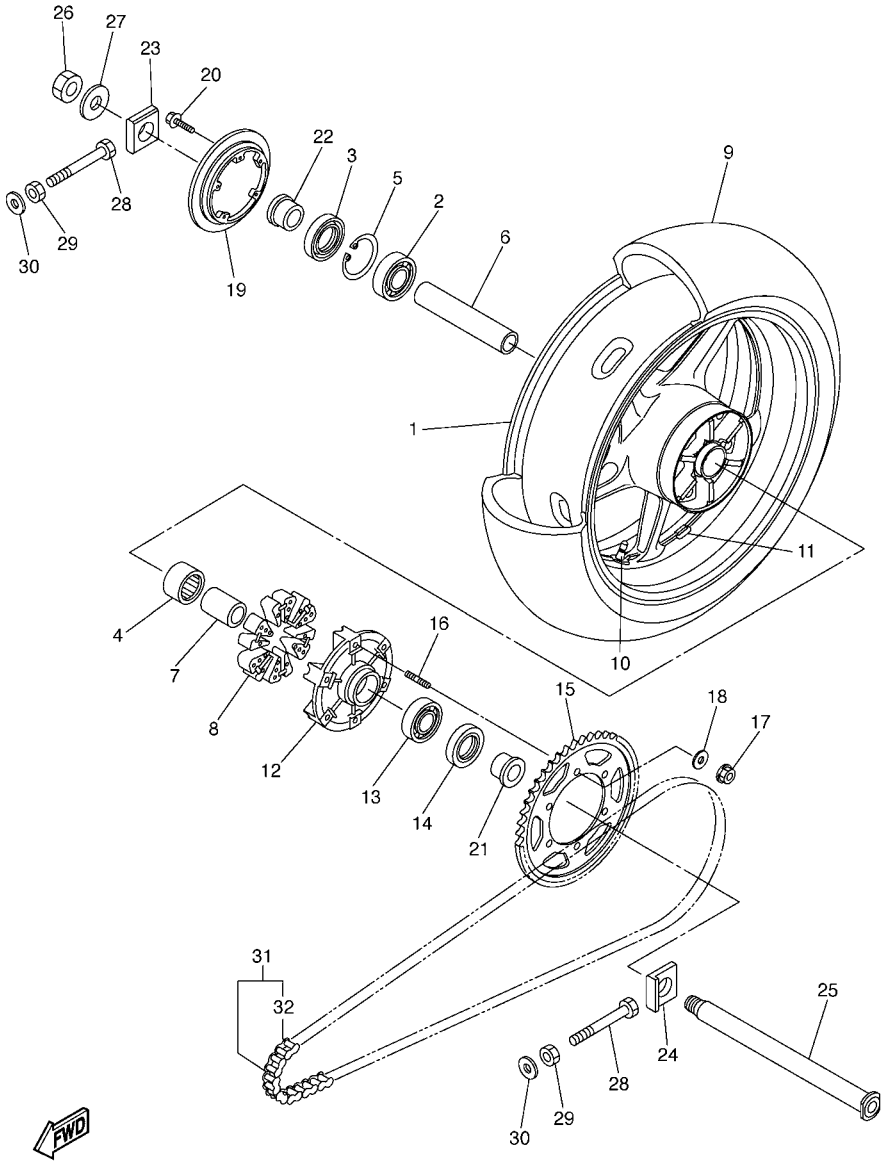

FIG. 32 RUEDA TRASERA

REF. Nº	CODIGO Nº	DESCRIPCION	5D01					OBSERVACIONES
1	5D0–25338–00–98	RUEDA FUNDIDA TRASERA	1					LGB
2	93306–20531	COJINETE	1					
3	93106–40013	SELLO ACEITE	1					
4	93317–33590	COJINETE	1					
5	93420–61M07	SEGURO	1					
6	5PW–25317–00	ESPACIADOR DE COJINETE	1					
7	2D1–25377–00	COLLAR DE RUEDA	1					
8	5VX–25364–00	AMORTIGUADOR	6					
9	94119–17062	NEUMATICO(190/50 ZR17M/C 73W)	1					UR DUNLOP
	*	NEUMATICO(190/50 ZR17M/C 73W)	1					UR LM MICHELIN
10	93900–00030	VALVULA DE ARO (TR412)	1					TAIHEIYO
11	5MT–25398–00	BALANCEADOR DE RUEDA (10G)	1					UN
	5MT–25398–10	BALANCEADOR DE RUEDA (20G)	1					UN
	5MT–25398–20	BALANCEADOR DE RUEDA (30G)	1					UN
12	2D1–25366–00	EMBRAGUE DE MASA	1					
13	93306–20531	COJINETE	1					
14	93106–40013	SELLO ACEITE	1					
15	2D1–25445–20	CORONA (45T)	1					
16	90116–10485	ESPARRAGO	6					
17	90185–10009	TUERCA AUTOBLOCANTE	6					
18	90201–10021	ARANDELA PLANA	6					
19	4P5–2537G–00	ROTOR DE SENSOR	1					
20	90105–05015	TORNILLO	5					
21	90387–28001	ESPACIADOR	1					
22	2D1–25383–00	COLLAR DE RUEDA	1					
23	5VY–25388–00	TIRADOR DE CADENA 1	1					
24	5VY–25389–00	TIRADOR DE CADENA 2	1					

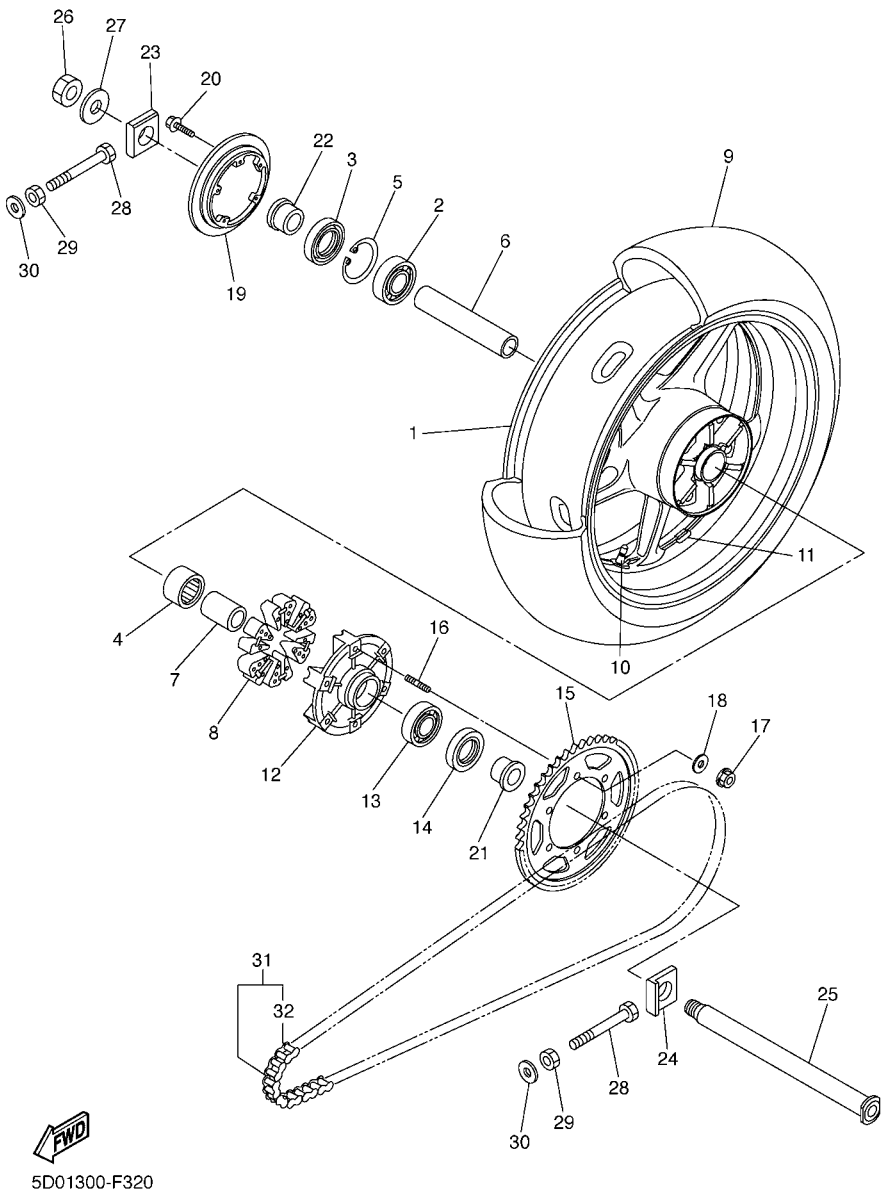

FIG. 32 RUEDA TRASERA

REF. Nº	CODIGO Nº	DESCRIPCION	5D01					OBSERVACIONES
25	2D1–25381–00	EJE DE RUEDA	1					
26	90185–24007	TUERCA AUTOBLOCANTE	1					
27	90201–25020	ARANDELA PLANA	1					
28	90101–08013	TORNILLO	2					
29	95302–08600	TUERCA	2					
30	90201–08057	ARANDELA PLANA	2					
31	94582–10122	CADENA (DID50VA8-122LL)	1					
32	94682–05031	.JUNTA, DE CADENA(DID50VA8-ZJ)	1					

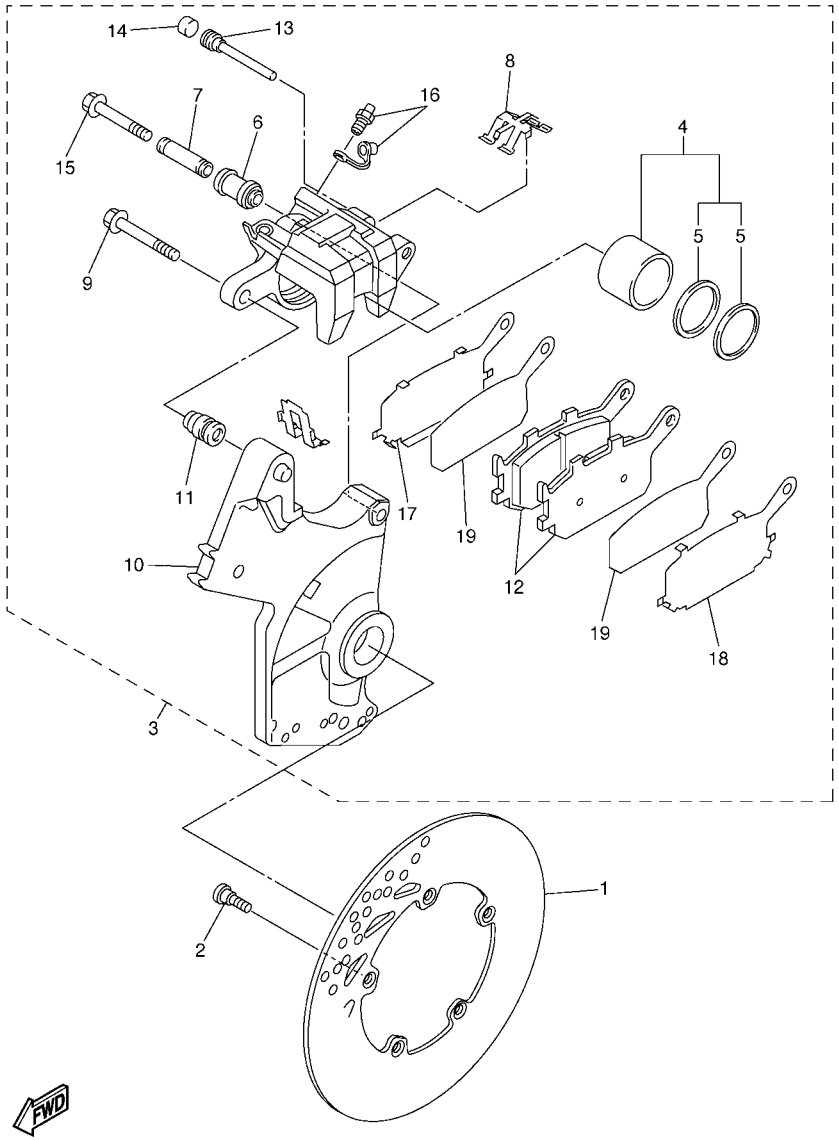

5D01300-F330

FIG. 33 CALIBRE FRENO TRASERA

REF. Nº	CODIGO Nº	DESCRIPCION	5D01					OBSERVACIONES
1	2D1–2582W–00	DISCO DE FRENO TRASEROS 2	1					
2	90149–08009	TORNILLO DE REGLAJE	5					
3	5D0–2580W–00	CALIBRE COMPLETO TRASEROS 2	1					
4	5SL–W0057–00	.PISTON COMPLETO PINZA	1					
5	5SL–W0047–00	..JUEGO DE RETENES DE PINZA	1					
6	5SL–25917–00	.FUNDA DE CALIBRE	1					
7	5SL–25838–00	.CASQUILLO DE CALIBRE	1					
8	5SL–25919–00	.SOPORTE DE PASTILLAS	1					
9	5SL–25914–00	.PASADOR	1					
10	5D0–25921–50	.MENSULA DE SOPORTE	1					
11	3JD–25917–00	.FUNDA DE CALIBRE	1					
12	5VX–W0046–00	.JUEGO DE PASTILLAS DE FRENO 2	1					
13	8CR–25924–00	.PASADOR	1					
14	5DH–25916–00	.TAPON	1					
15	5SL–25926–00	.PERNO	1					
16	8CR–W0048–00	.CJTO TORNILLO DE PURGA	1					
17	5SL–25827–00	.CUNA DE CALIBRE	1					
18	5SL–25827–10	.CUNA DE CALIBRE	1					
19	5SL–25828–00	.CUNA DE CALIBRE	2					

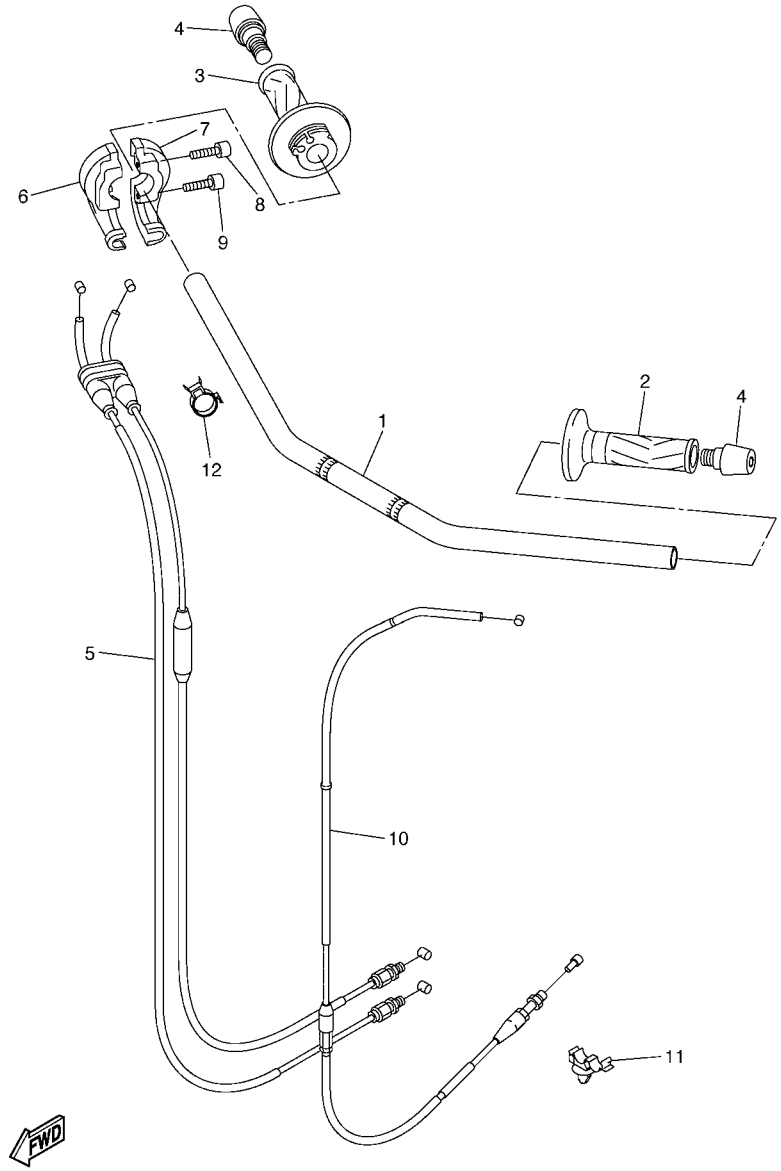

3C3A300-F340

FIG. 34 MANILLAR & CABLE

REF. Nº	CODIGO Nº	DESCRIPCION	5D01					OBSERVACIONES
1	2D1–26111–01	MANUBRIO	1					
2	4YR–26241–02	EMPUNADURA (IZQUIERDO)	1					
3	4YR–26240–02	EMPUNADURA COMPLETA	1					
4	51J–26246–01	EXTREMO DE EMPUNADURA	2					
5	2D1–26302–00	CABLE DE ACELERADOR COMPLETO	1					
6	3LN–26281–01	TAPA DE EMPUNADURA SUPERIOR	1					
7	4BP–26282–00	TAPA DE EMPUNADURA INFERIOR	1					
8	91317–05020	PERNO	1					
9	91317–05025	PERNO	1					
10	3C3–26335–00	CABLE DE EMBRAGUE	1					
11	90464–10008	BRIDA	1					
12	90464–20191	BRIDA	1					

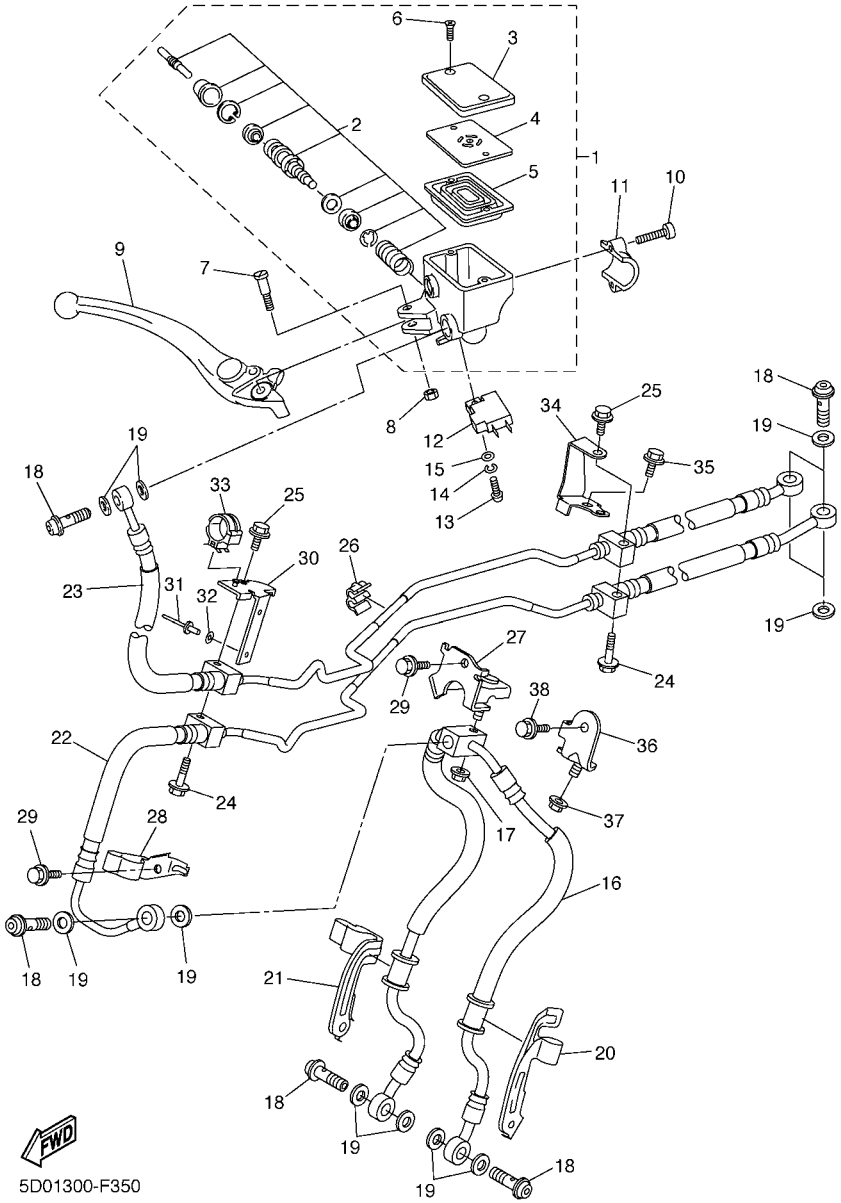

FIG. 35 CILINDRO MAESTRO DELANTERO

REF. Nº	CODIGO Nº	DESCRIPCION	5D01					OBSERVACIONES
1	5D0–W2587–00	CILINDRO MAESTRO SUB COMPLET	1					
2	2D1–W0041–00	.JUEGO DE CILINDRO MAESTRO	1					
3	5VS–25852–00	.TAPA DE TANQUE DE RESERVA	1					
4	5VS–25855–00	.BUJE DE DIAFRAGMA	1					
5	5VS–25854–00	.DIAFRAGMA TANQUE RESERVA	1					
6	5VS–2589H–00	.TORNILLO	2					
7	5VS–2589F–00	PERNO DE PALANCA	1					
8	95617–06100	TUERCAAUTOBLOCANTE	1					
9	5VS–83922–00	PALANCA 2	1					
10	5VS–26332–00	PERNO	2					
11	5VS–25867–00	SOPORTE DE CILINDRO MAESTRO	1					
12	4HM–83980–00	INTERRUP. DE PARADA DELANTERO	1					
13	98502–04012	TORNILLO	1					
14	92902–04100	ARANDELA	1					
15	92902–04600	ARANDELA	1					
16	5D0–25872–00	MANGUERA DE FRENO 1	1					
17	95707–06500	TUERCA DE BRIDA	1					
18	90401–10172	PERNO DE UNION	6					
19	90430–10005	JUNTA	12					
20	5D0–25875–00	SOPORTE DE MANGUERA FRENO 1	1					
21	5D0–25876–00	SOPORTE DE MANGUERA FRENO 2	1					
22	5D0–2584A–00	MANGUERA DE FRENO	1					
23	5D0–2584B–00	MANGUERA DE FRENO	1					
24	90105–06400	TORNILLO	2					
25	95027–06010	PERNO, DE BRIDA	2					
26	90464–04001	BRIDA	1					
27	5D0–2588F–00	SOPORTE DE MANGUERA FRENO 5	1					

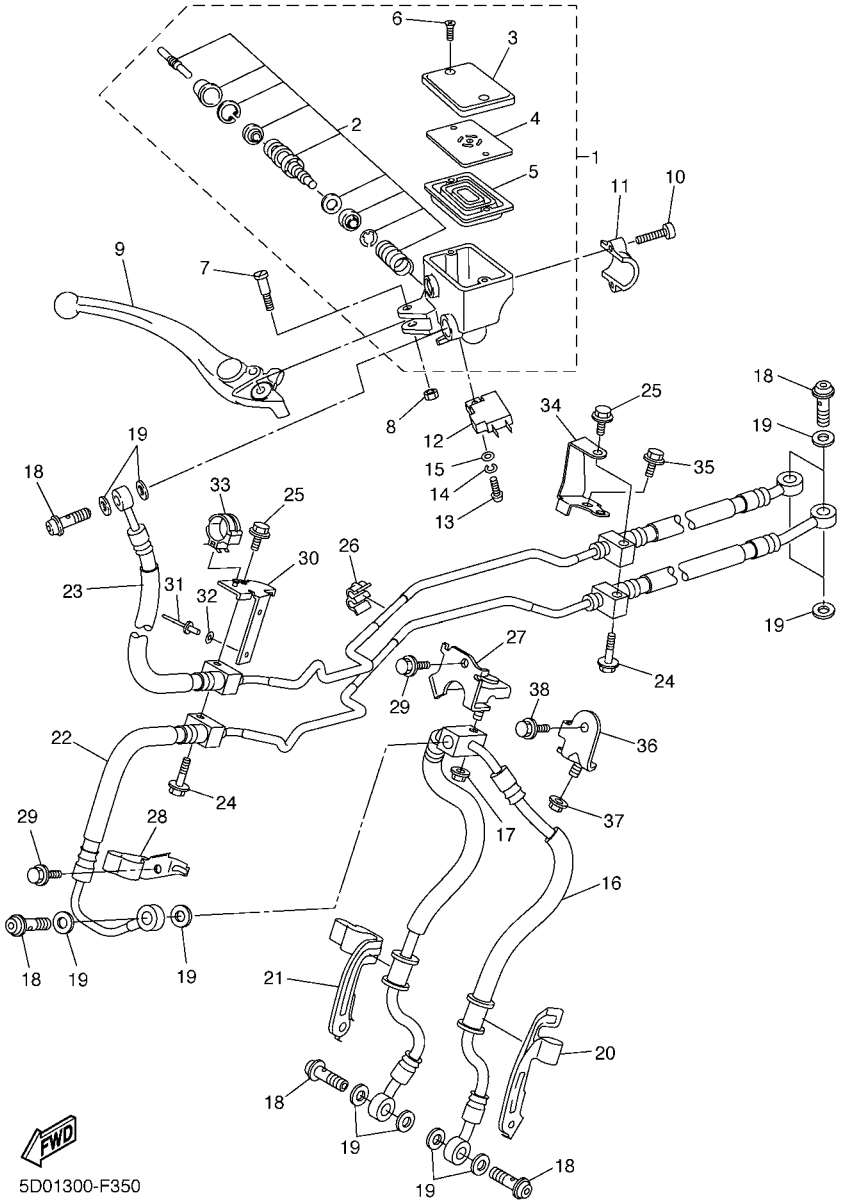

FIG. 35 CILINDRO MAESTRO DELANTERO

REF. Nº	CODIGO Nº	DESCRIPCION	5D01					OBSERVACIONES
28	5D0–2588G–00	SOPORTE DE MANGUERA FRENO 6	1					
29	95027–06014	PERNO, DE BRIDA	2					
30	5D0–2612K–00	SOPORTE 2	1					
31	90267–32012	REMACHE CIEGO	2					
32	90201–04015	ARANDELA PLANA	1					
33	90464–15192	BRIDA	1					
34	5D0–26292–00	SOPORTE	1					
35	95027–06020	PERNO, DE BRIDA	1					
36	3C3–23378–00	SOPORTE DE BOCINA	1					
37	95707–06500	TUERCA DE BRIDA	1					
38	90105–06556	TORNILLO	1					

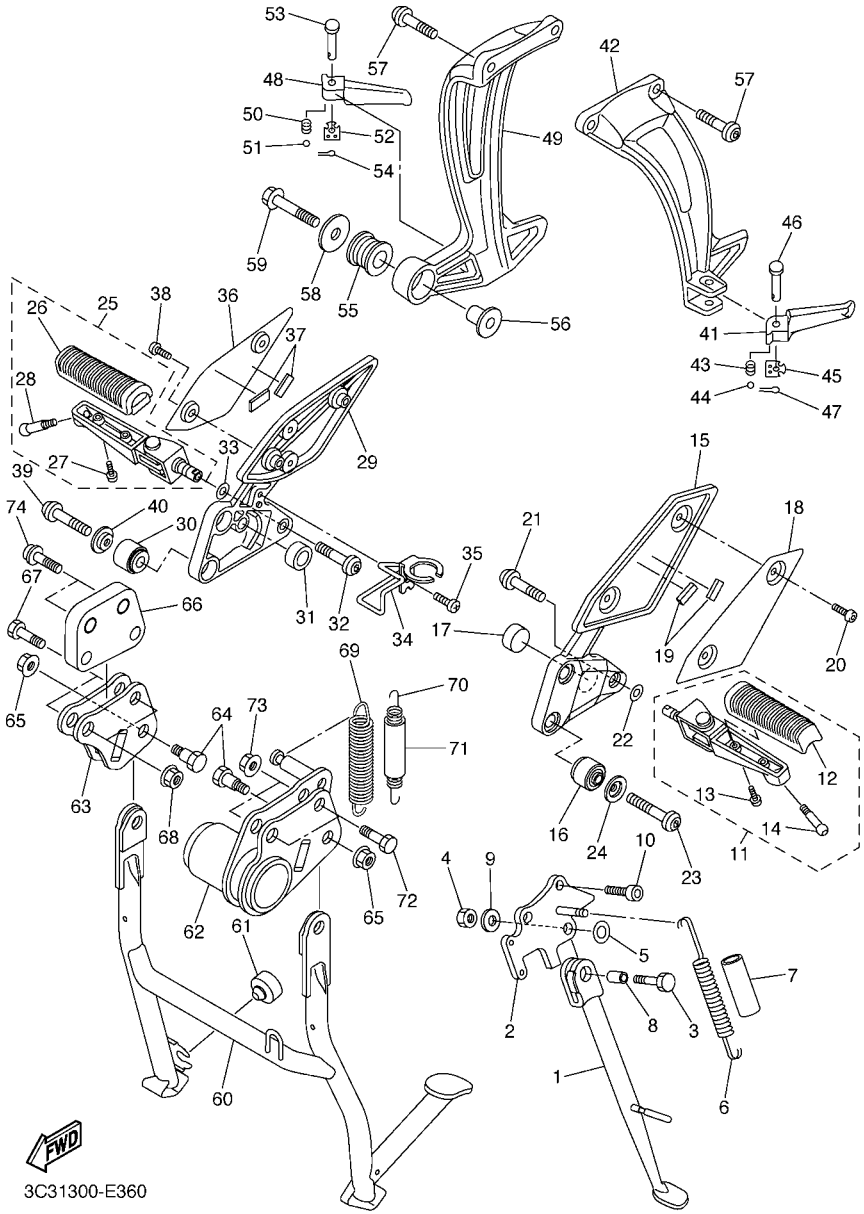

FIG. 36 SOPORTE & APOYAPIE

REF. Nº	CODIGO Nº	DESCRIPCION	5D01					OBSERVACIONES
1	2D1–27311–00	PUNTAL LATERAL	1					
2	2D1–27321–00	SOPORTE DE PUNTAL LATERAL	1					
3	90101–10006	TORNILLO	1					
4	90185–10037	TUERCA AUTOBLOCANTE	1					
5	90201–16020	ARANDELA PLANA	1					
6	90506–18008	RESORTE DE TENSION	1					
7	90445–19002	TUBO (L60)	1					
8	90387–10050	ESPACIADOR	1					
9	90201–101J1	ARANDELA PLANA	1					
10	90110–10010	TORNILLO ALLEN	2					
11	2D1–27410–00	APOYAPIE DELANTERO (MI)	1					
12	4BP–27413–00	.CUBIERTA DE APOYAPIE	1					
13	90157–05025	.TORNILLO CABEZA CONICA PLANA	2					
14	90109–08174	.PERNO	1					
15	2D1–27442–00	SOPORTE 2	1					
16	1NL–27424–00	AMORTIGUADOR DE APOYAPIE 2	2					
17	5VX–27114–00	TOPE DE PUNTAL PRINCIPAL	1					
18	2D1–27486–00	CUBIERTA 1	1					
19	1HX–27415–00	PLACA	2					
20	90111–05015	TORNILLO	2					
21	90109–103A9	PERNO	1					
22	90206–17084	ARANDELA ONDULADA	1					
23	90110–08071	TORNILLO ALLEN	2					
24	90209–08295	ARANDELA DE SEPARACION	2					
25	2D1–27420–00	APOYAPIE DELANTERO (MD)	1					
26	4BP–27413–00	.CUBIERTA DE APOYAPIE	1					
27	90157–05025	.TORNILLO CABEZA CONICA PLANA	2					

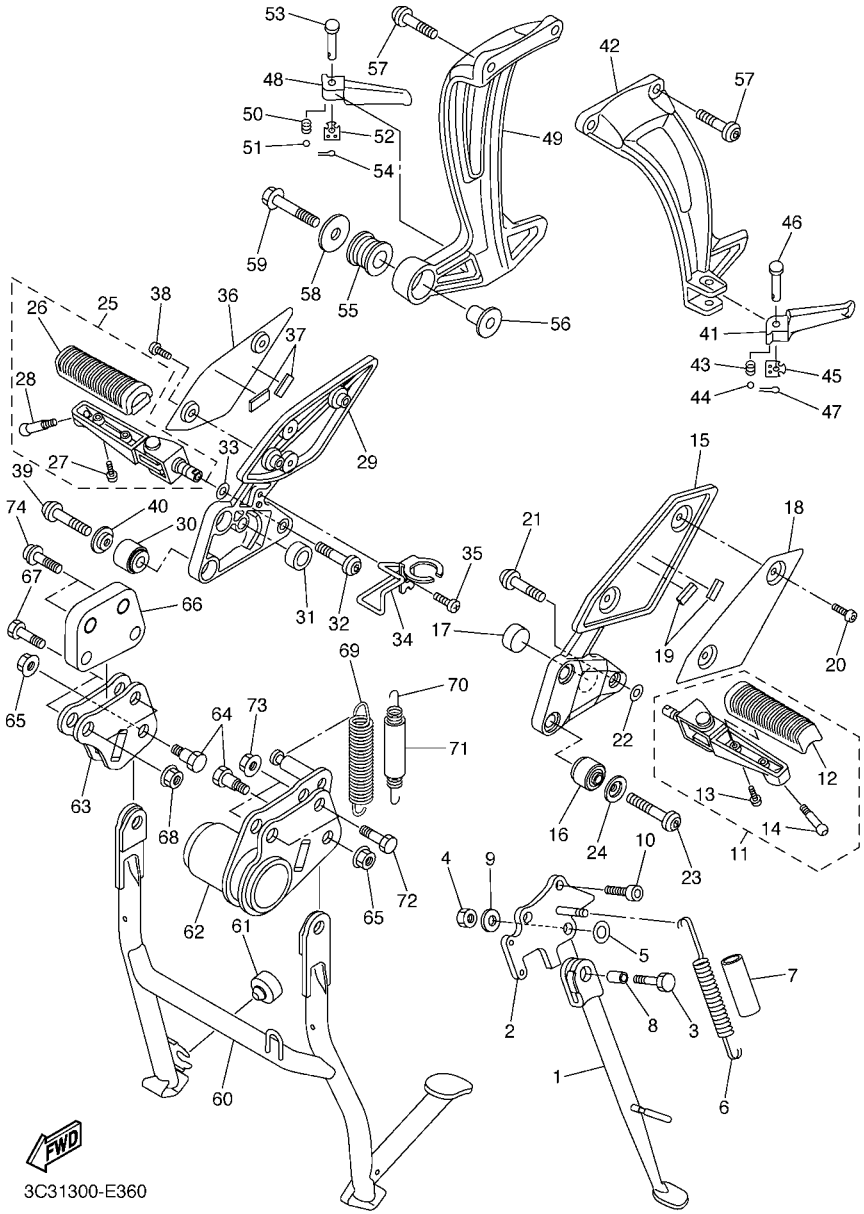

FIG. 36 SOPORTE & APOYAPIE

REF. Nº	CODIGO Nº	DESCRIPCION	5D01					OBSERVACIONES
28	90109–08174	.PERNO	1					
29	2D1–27443–00	SOPORTE 3	1					
30	1NL–27424–00	AMORTIGUADOR DE APOYAPIE 2	2					
31	5VX–27114–00	TOPE DE PUNTAL PRINCIPAL	1					
32	90109–103A9	PERNO	1					
33	90206–17084	ARANDELA ONDULADA	1					
34	2D1–2144G–00	SOPORTE DE INTERRUPTOR	1					
35	98507–06008	TORNILLO DE CABEZA PLANA	1					
36	2D1–27487–00	CUBIERTA 2	1					
37	1HX–27415–00	PLACA	2					
38	90111–05015	TORNILLO	2					
39	90110–08071	TORNILLO ALLEN	2					
40	90209–08295	ARANDELA DE SEPARACION	2					
41	3VR–27431–01	APOYAPIE POSTERIOR 1	1					
42	2D1–2741L–00	MENSULA 4	1					
43	90501–12743	RESORTE DE COMPRESION	1					
44	93501–04011	BOLA	1					
45	5VX–27437–00	ARANDELA ESPECIAL	1					
46	91702–08040	PASADOR DE ADRAZADERA	1					
47	91401–25015	PASADOR DE CHAVETA	1					
48	3VR–27441–01	APOYAPIE POSTERIOR 2	1					
49	2D1–2742L–00	MENSULA 5	1					
50	90501–12743	RESORTE DE COMPRESION	1					
51	93501–04011	BOLA	1					
52	5VX–27437–00	ARANDELA ESPECIAL	1					
53	91702–08040	PASADOR DE ADRAZADERA	1					
54	91401–25015	PASADOR DE CHAVETA	1					

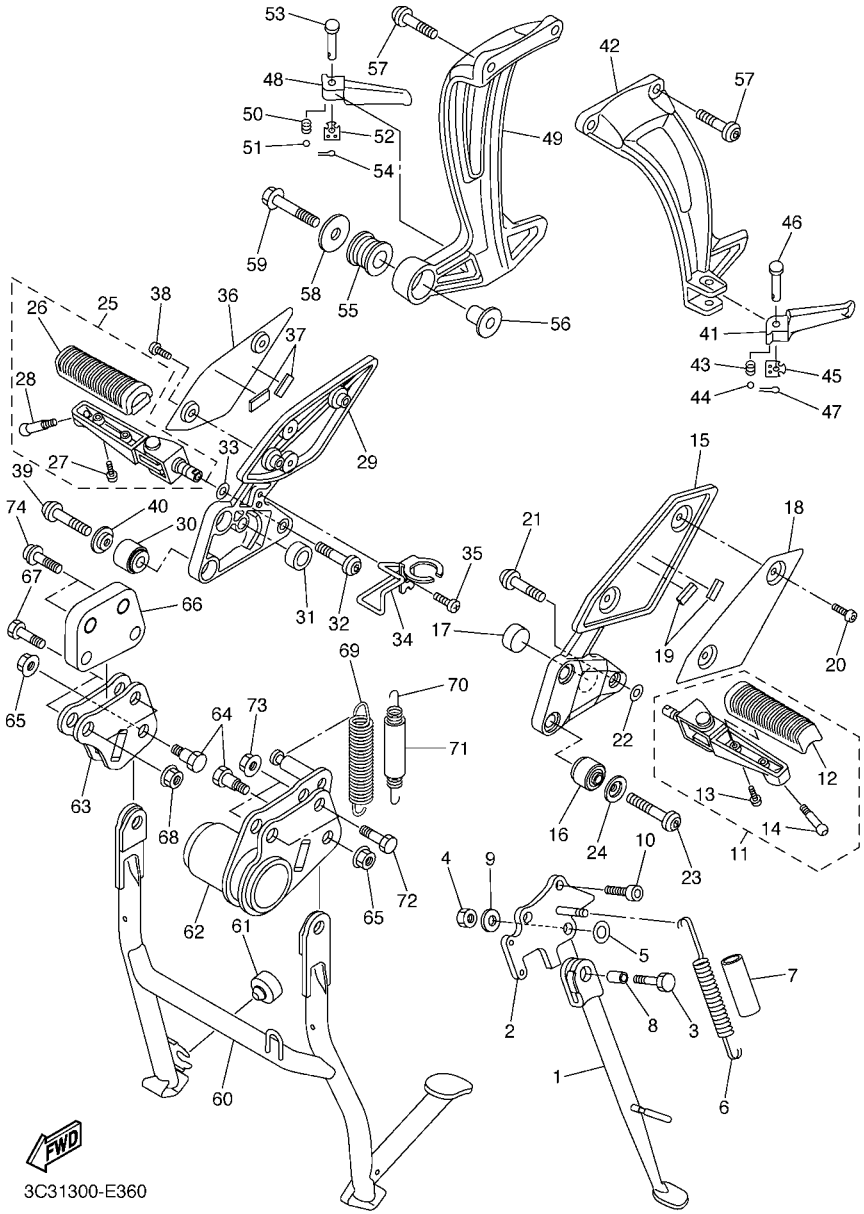

FIG. 36 SOPORTE & APOYAPIE

REF. Nº	CODIGO Nº	DESCRIPCION	5D01					OBSERVACIONES
55	36Y–27424–01	AMORTIGUADOR DE APOYAPIE 2	1					
56	90387–10636	ESPACIADOR	1					
57	90109–085G6	PERNO	4					
58	90201–10669	ARANDELA PLANA	1					
59	95814–10040	TORNILLO	1					
60	3C3–27111–00	PUNTAL PRINCIPAL	1					
61	371–27114–00	TOPE DE PUNTAL PRINCIPAL	1					
62	3C3–27151–01	SOPORTE PUNTAL PPAL.	1					
63	5D0–27152–00	SOPORTE PUNTAL PPAL.	1					
64	90109–101E6	PERNO	2					
65	95607–10200	TUERCA DE AUTO-CIERRE	2					
66	3C3–274A3–00	SOPORTE,ADAPTADOR 1	1					
67	90101–10004	TORNILLO	2					
68	95607–10200	TUERCA DE AUTO-CIERRE	2					
69	90506–40007	RESORTE DE TENSION	1					
70	90506–23010	RESORTE DE TENSION	1					
71	90445–19003	TUBO	1					
72	90101–10004	TORNILLO	2					
73	95607–10200	TUERCA DE AUTO-CIERRE	2					
74	90109–105G7	PERNO	2					

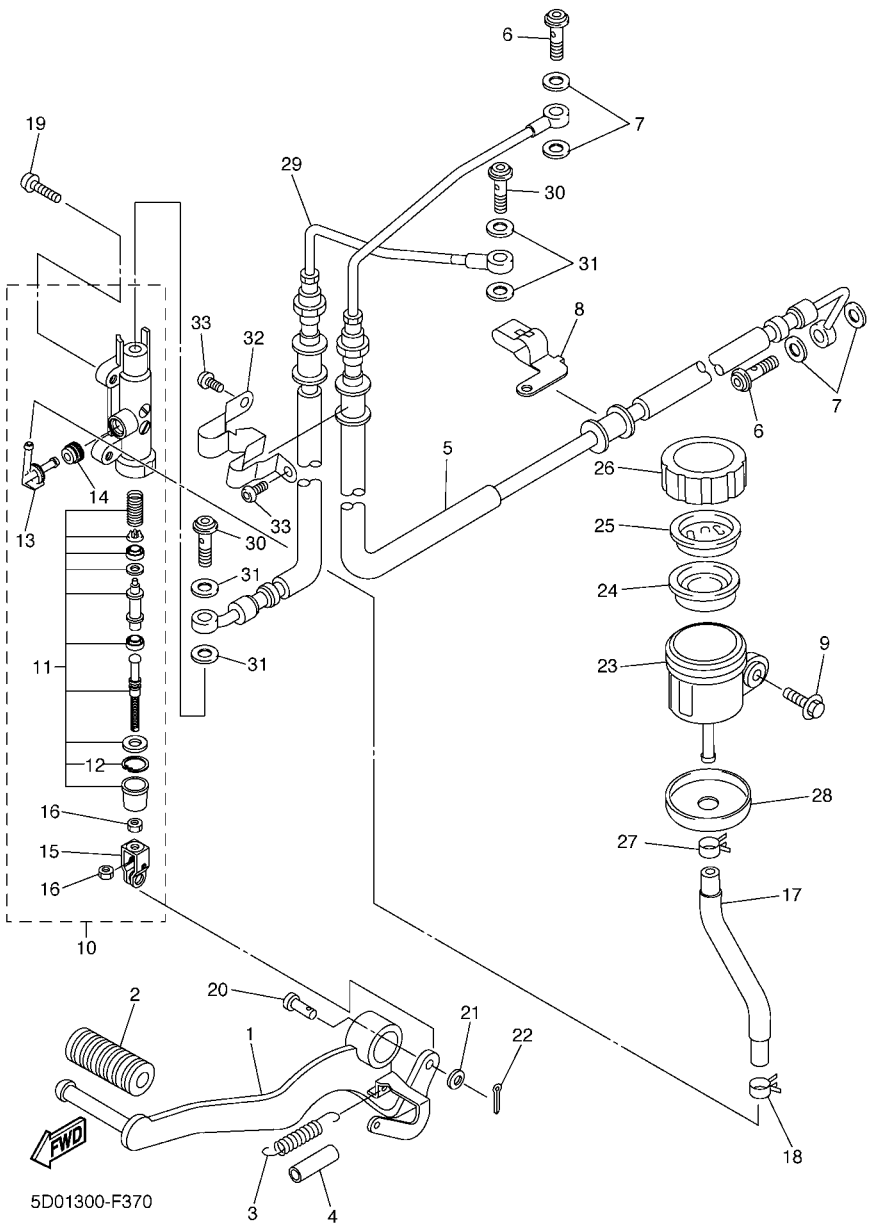

FIG. 37 CILINDRO MAESTRO TRASERO

REF. Nº	CODIGO Nº	DESCRIPCION	5D01					OBSERVACIONES
1	2D1–27211–00	PEDAL DE FRENO	1					
2	5EB–18113–00	FUNDA DEL PEDAL DEL CAMBIO	1					
3	90506–20014	RESORTE DE TENSION	1					
4	90446–15386	TUBO RESEIRADERO	1					
5	5D0–25874–00	MANGUERA DE FRENO	1					
6	90401–10172	PERNO DE UNION	2					
7	90430–10005	JUNTA	4					
8	5D0–25886–00	SOPORTE DE MANGUERA FRENO	1					
9	90119–05020	TORNILLO CON ARANDELA	1					
10	4P5–2583V–00	CILINDRO, MAESTRO TRASERO	1					
11	5VX–W0042–50	.JUEGO DE CILINDRO MAESTRO	1					
12	3LN–2585G–00	..PRECILLA REDONDA	1					
13	2D1–2582A–00	.CONECTOR	1					
14	4BP–2585F–00	.BUJE	1					
15	4BP–27222–01	.UNION	1					
16	90170–08010	.TUERCA	2					
17	5D0–25895–00	MANGUERA DE TANQUE DE RESERVA	1					
18	90467–120A3	PRESILLA	1					
19	92014–08020	PERNO	2					
20	90240–08124	PASADOR CON HOYO	1					
21	90201–08083	ARANDELA PLANA	1					
22	91401–20012	PASADOR DE CHAVETA	1					
23	2D1–25894–00	TANQUE DE RESERVA	1					
24	5SL–25854–00	DIAFRAGMA TANQUE RESERVA	1					
25	5SL–25855–00	BUJE DE DIAFRAGMA	1					
26	5SL–25852–00	TAPA DE TANQUE DE RESERVA	1					
27	90467–12191	PRESILLA	1					

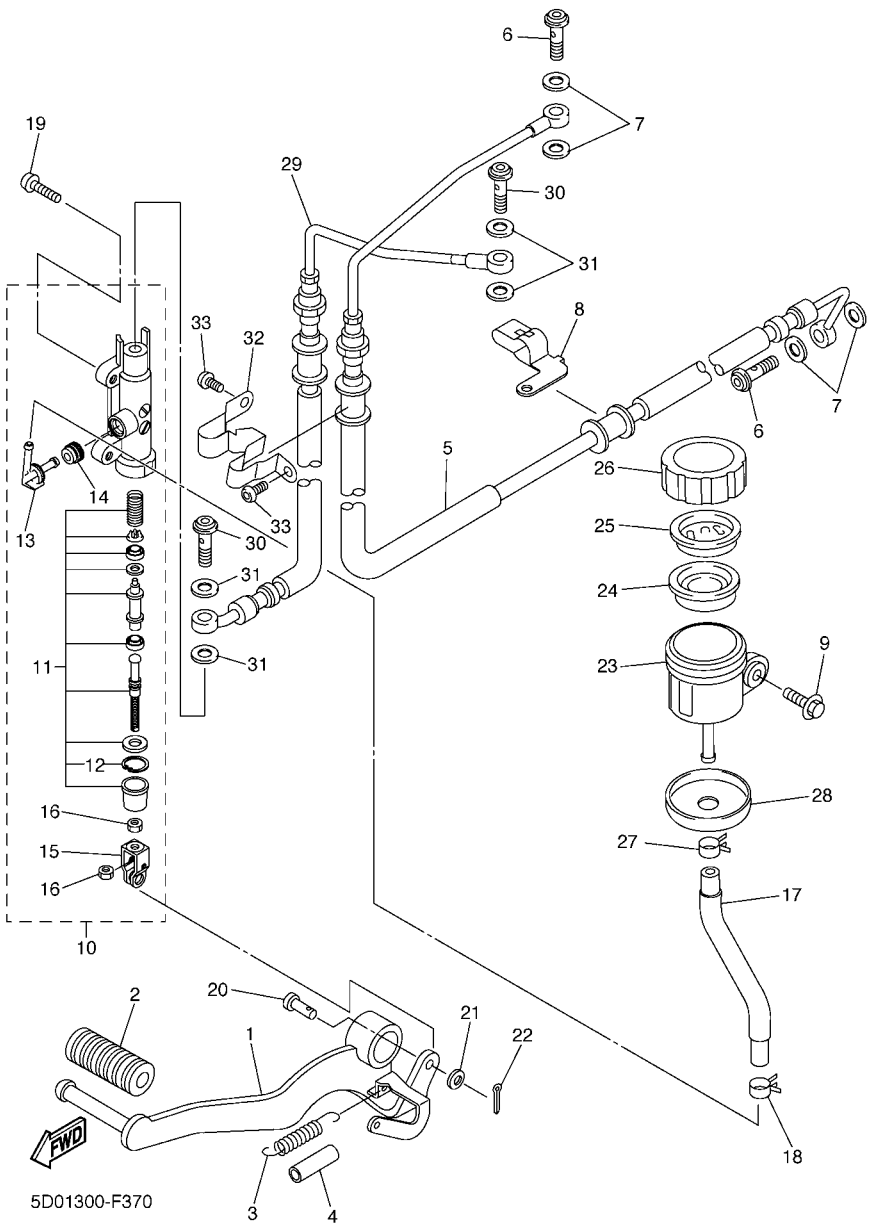

FIG. 37 CILINDRO MAESTRO TRASERO

REF. Nº	CODIGO Nº	DESCRIPCION	5D01					OBSERVACIONES
28	5D0–2583H–00	FUNDA	1					
29	5D0–2581J–00	MANGUERA, DE FRENO 4	1					
30	90401–10172	PERNO DE UNION	2					
31	90430–10005	JUNTA	4					
32	5D0–2587A–00	SOPORTE DE MANGUERA FRENO	1					
33	90111–06085	TORNILLO	2					

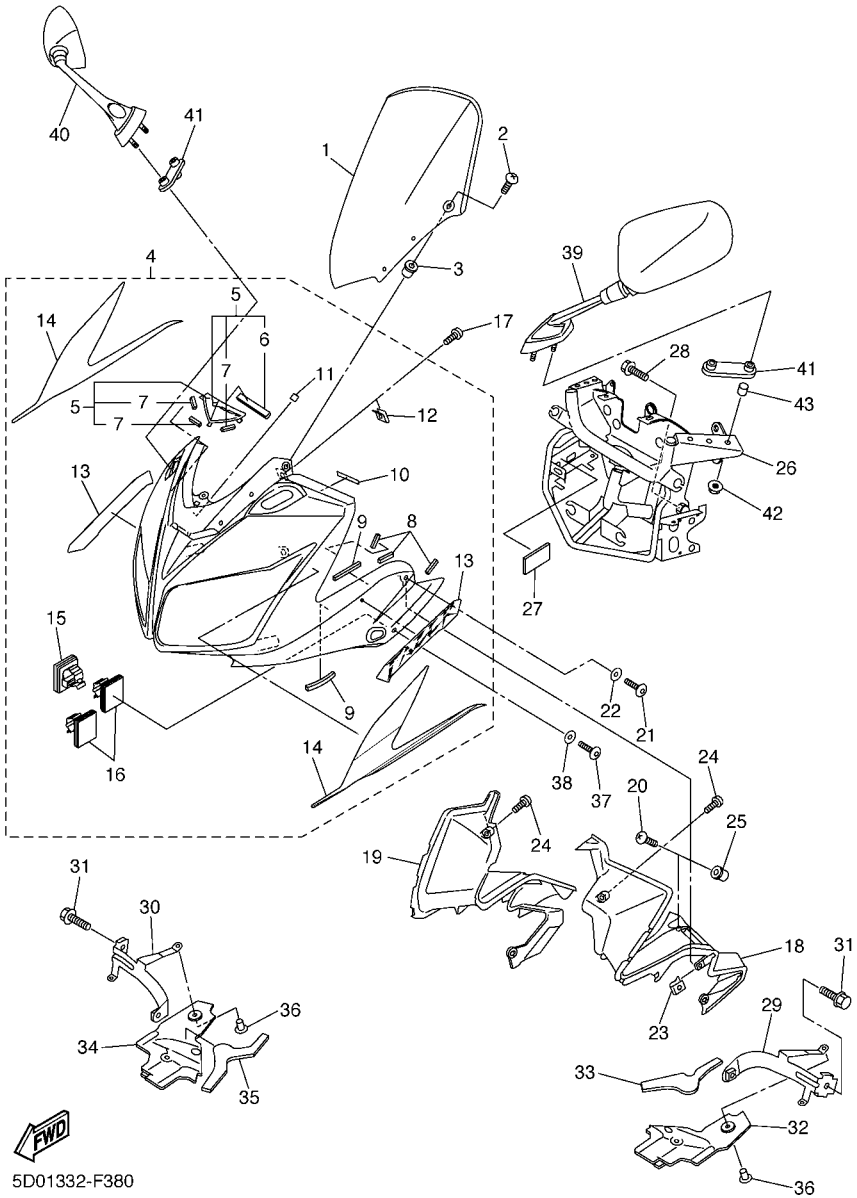

FIG. 38 BOVEDA 1

REF. Nº	CODIGO Nº	DESCRIPCION	5D01					OBSERVACIONES
1	3C3–28381–00	PARABRISA	1					
2	90150–05024	TORNILLO CABEZA REDONDA	6					
3	90179–05523	TUERCA	6					
4	3C3–Y283G–F0–P0	CARROCERIA DELANT SUP 1	1					UR PARA DPBMU
	3C3–Y283G–J0–P4	CARROCERIA DELANT SUP 1	1					UR SMX PARA BNM5
	3C3–Y283G–K0–P4	CARROCERIA DELANT SUP 1	1					UR SMX PARA DRMK
5	3C3–Y283W–10	.CUBIERTA COMPLETO	1					
6	3C3–28371–01	..AMORTIGUADOR	1					
7	3C3–28372–00	..AMORTIGUADOR	3					
8	3C3–2837J–00	.AMORTIGUADOR	6					
9	4XV–2834E–00	.AMORTIGUADOR 1	4					
10	3P6–28307–00	.SELLO	2					
11	5JW–23844–00	.SELLO	1					
12	90183–05076	.TUERCA DE RESORTE	2					
13	3C3–28315–00	.EMBLEMA	2					UR PARA DPBMU
	3C3–28315–30	.EMBLEMA	2					UR PARA BNM5,DRMK
14	3C3–283B1–00	.JUEGO DE CALCOMANIAS	1					UR PARA BNM5
	3C3–283B1–10	.JUEGO DE CALCOMANIAS	1					UR PARA DRMK
15	90464–62085	.BRIDA	1					
16	90464–20003	.BRIDA	2					
17	90154–05007	TORNILLO DE LIGAR	2					
18	3C3–2836K–00	PANEL 1	1					
19	3C3–2836L–00	PANEL 2	1					
20	90154–05007	TORNILLO DE LIGAR	2					
21	90110–06200	TORNILLO ALLEN	2					
22	90202–06170	ARANDELA DE PLANA	2					
23	90183–06053	TUERCA DE RESORTE	2					

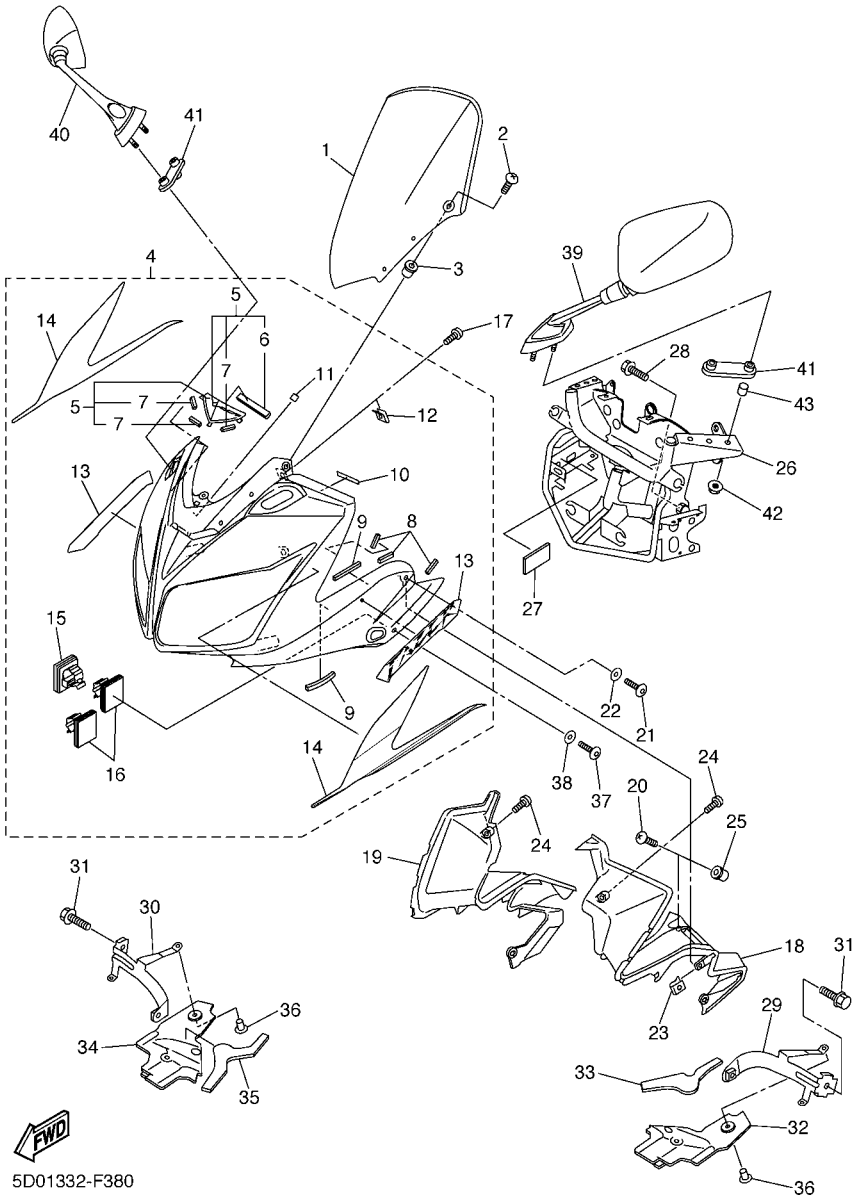

FIG. 38 BOVEDA 1

REF. Nº	CODIGO Nº	DESCRIPCION	5D01					OBSERVACIONES
24	90154–05007	TORNILLO DE LIGAR	2					
25	90179–05523	TUERCA	2					
26	5D0–28356–00	SOPORTE 1	1					
27	5D0–2837K–00	AMORTIGUADOR 6	1					
28	95827–08035	TORNILLO	2					
29	3C3–2836A–00	SOPORTE 1	1					
30	3C3–2836E–00	SOPORTE 2	1					
31	95807–06010	TORNILLO	2					
32	3C3–2835U–00	PANEL 1	1					
33	3C3–2834E–00	AMORTIGUADOR 1	1					
34	3C3–2835V–00	PANEL 2	1					
35	3C3–2834F–00	AMORTIGUADOR	1					
36	90269–06008	REMACHE	4					
37	90110–06200	TORNILLO ALLEN	2					
38	90202–06170	ARANDELA DE PLANA	2					
39	3C3–26280–00	ESPEJO COMPLETO (IZQUIERDO)	1					
40	3C3–26290–00	ESPEJO COMPLETO (DERECHO)	1					
41	3C3–26298–00	PLACA DE ESPEJO 1	2					
42	95707–06500	TUERCA DE BRIDA	4					
43	90387–064T3	ESPACIADOR	4					

FIG. 39 GENERADOR

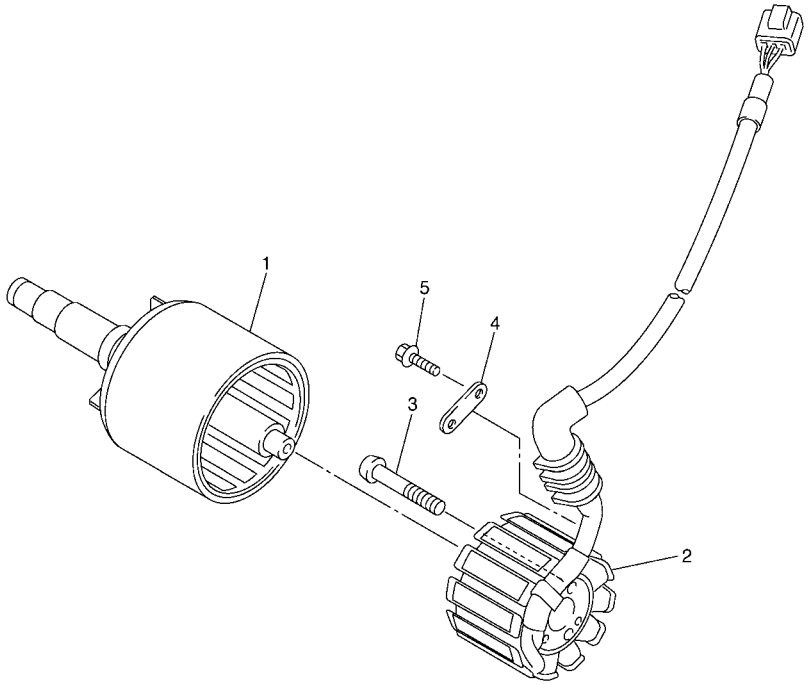

5VY1300-C400

REF. Nº	CODIGO Nº	DESCRIPCION	5D01					OBSERVACIONES
1	5VY–81450–00	ROTOR COMPLETO	1					
2	5D0–81410–00	ESTATOR COMPLETO	1					
3	90149–06067	TORNILLO DE REGLAJE	3					
4	4C8–15191–00	PLACA	1					
5	90105–06078	TORNILLO	1					

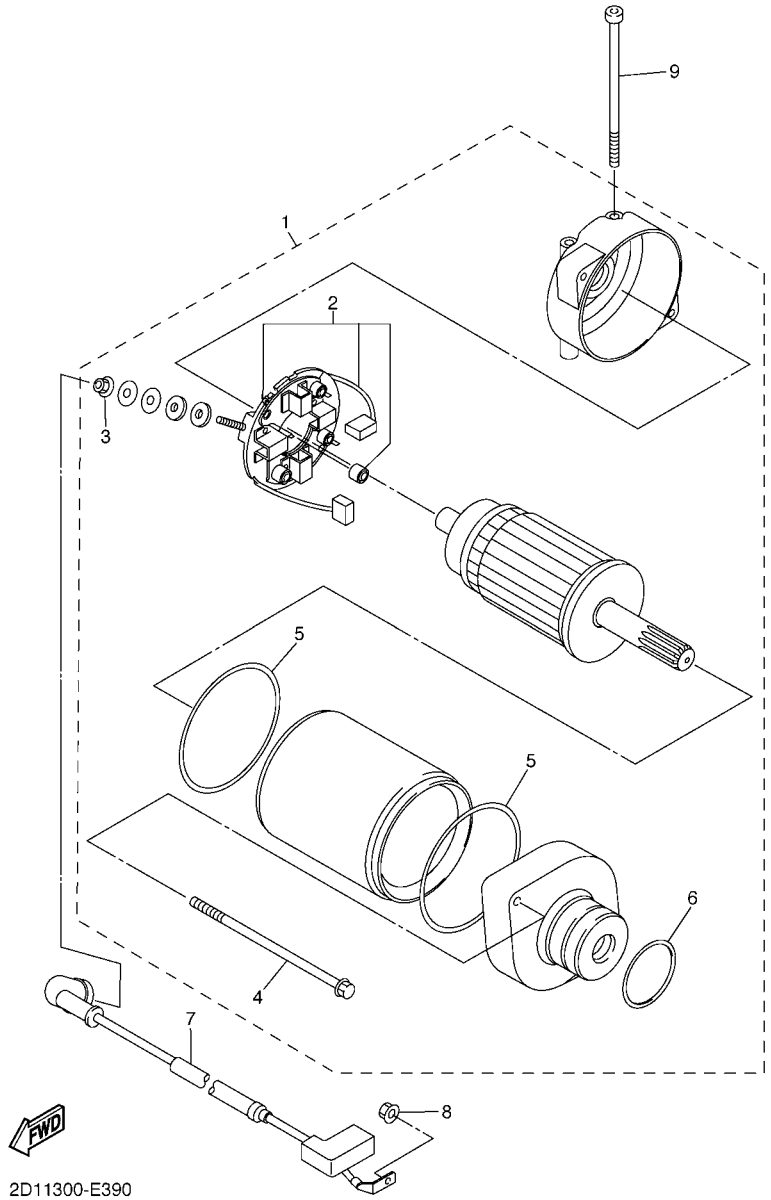

FIG. 40 MOTOR DE ARRANQUE

REF. Nº	CODIGO Nº	DESCRIPCION	5D01					OBSERVACIONES
1	2D1–81890–00	MOTOR DE ARRANQUE COMPLETO	1					
2	3AJ–81801–00	.JUEGO DE ESCOBILLA	1					
3	4XV–8182A–00	.TUERCA	1					
4	2D1–81826–00	.PERNO	2					
5	11H–81844–00	.EMPAQUE	2					
6	1FK–81847–00	.ANILLO GOMA	1					
7	2D1–81815–00	CABLE, MOTOR DE ARRANQUE	1					
8	4XV–8182A–00	TUERCA	1					
9	91312–06080	TORNILLO	2					

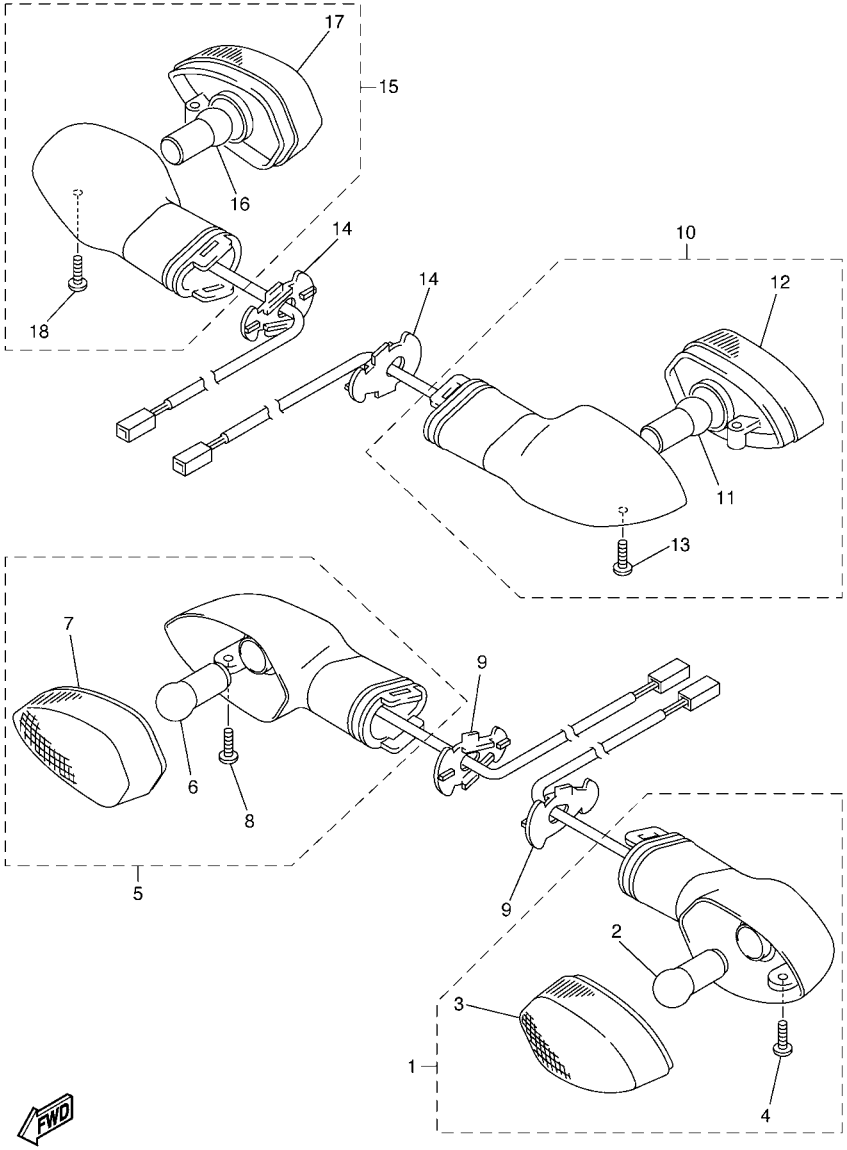

FIG. 41 LUZ DE DESTELLADOR

REF. Nº	CODIGO Nº	DESCRIPCION	5D01					OBSERVACIONES
1	5PW–83310–01	DESTELLADOR DE LUZ DELANT.	1					
2	1KH–83311–00	.BOMBILLA (12V-10W)	1					
3	5PW–8333A–00	.LENTES COMPLETO	1					
4	97706–04012	.TORNILLO, ROSCA CHAPA	1					
5	5PW–83320–01	DESTELLADOR DE LUZ DELANT.	1					
6	1KH–83311–00	.BOMBILLA (12V-10W)	1					
7	5PW–8334A–00	.LENTES COMPLETO	1					
8	97706–04012	.TORNILLO, ROSCA CHAPA	1					
9	2D1–83318–00	SOPORTE DE DESTELLADOR 1	2					
10	2D1–83330–20	DESTELLADOR DE LUZ TRAS.COMPL.	1					
11	1KH–83311–00	.BOMBILLA (12V-10W)	1					
12	5PW–8334A–00	.LENTES COMPLETO	1					
13	97706–04012	.TORNILLO, ROSCA CHAPA	1					
14	2D1–83318–00	SOPORTE DE DESTELLADOR 1	2					
15	2D1–83340–20	DESTELLADOR DE LUZ TRAS.COMPL.	1					
16	1KH–83311–00	.BOMBILLA (12V-10W)	1					
17	5PW–8333A–00	.LENTES COMPLETO	1					
18	97706–04012	.TORNILLO, ROSCA CHAPA	1					

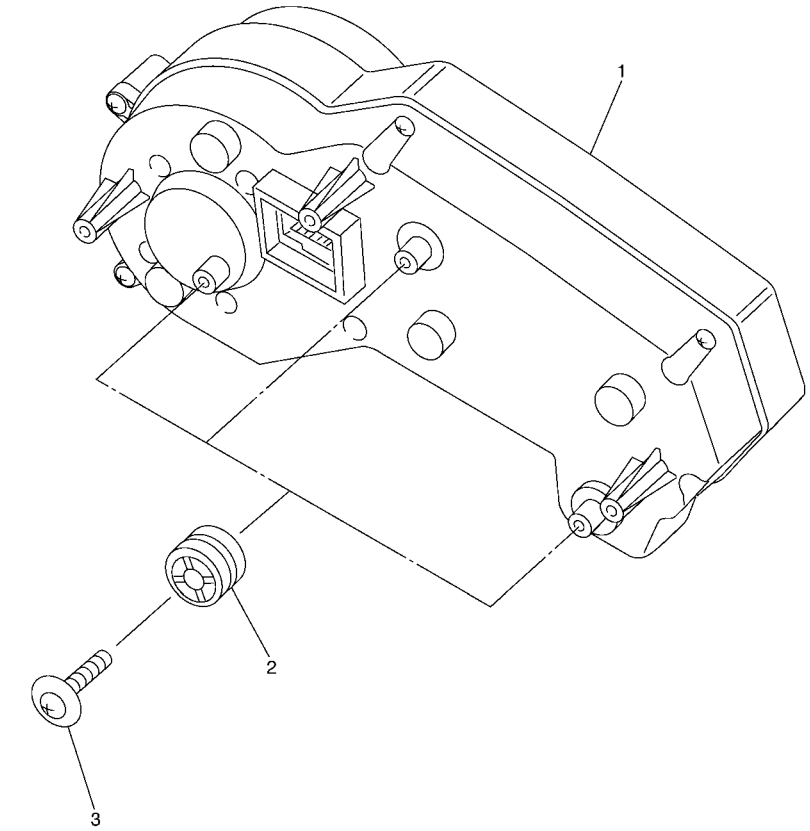

3C31300-E420

FIG. 42 MEDIDOR

REF. Nº	CODIGO Nº	DESCRIPCION	5D01					OBSERVACIONES
1	5D0–83500–00	VELOCIMETRO COMPLETO (KM/H)	1					
2	3C3–83513–00	AMORTIGUADOR	3					
3	90164–05014	TORNILLO ROSCA HEMBRA	3					

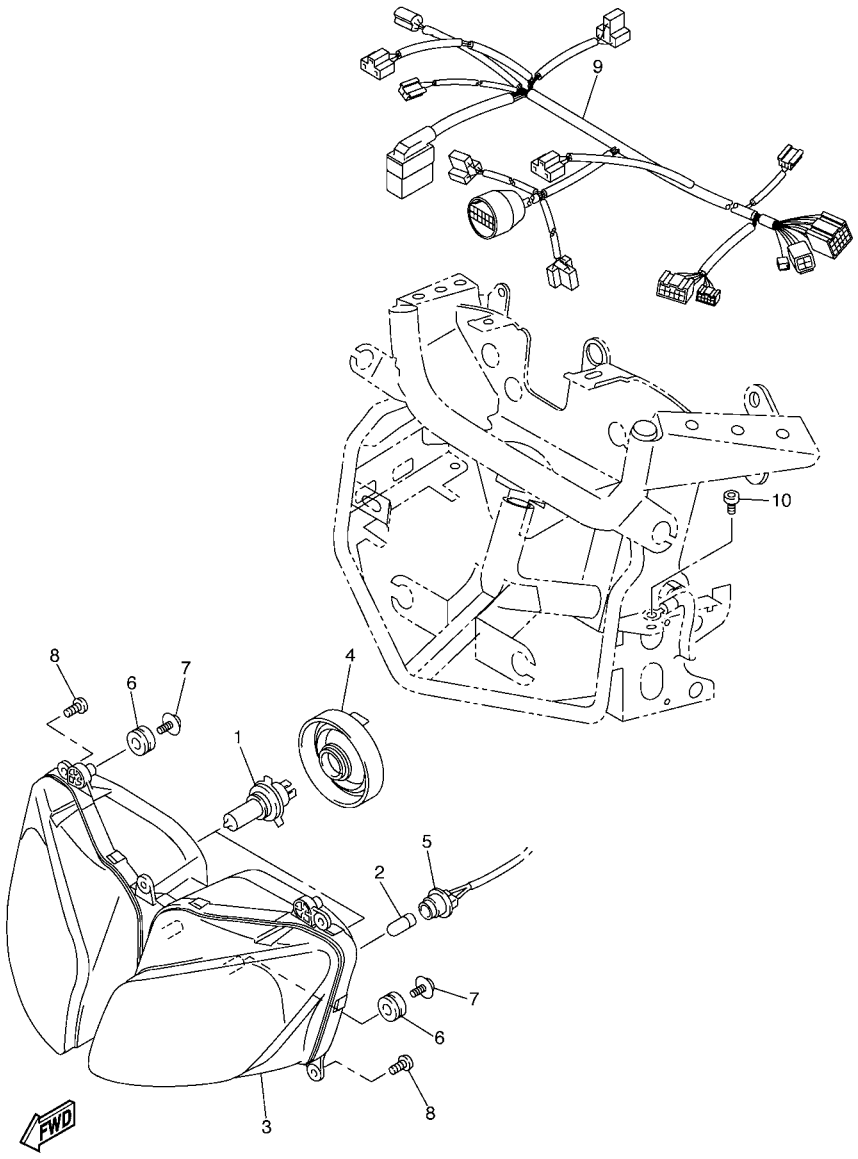

5D01300-F430

FIG. 43 FARO DELANTERO

REF. Nº	CODIGO Nº	DESCRIPCION	5D01					OBSERVACIONES
1	8V0–84314–00	BOMBILLA (12V-60/55W)	2					
2	4SV–84347–00	BOMBILLA (12V-5W)	2					
3	3C3–84310–00	UNIDAD DE FARO DELANTERO COMPL	1					
4	5LV–84397–00	CUBIERTA DE ENCASTRE	2					
5	3C3–84312–00	CABLE COMPLETA	2					
6	90480–14229	TAPON	4					
7	90164–05014	TORNILLO ROSCA HEMBRA	4					
8	97707–50016	TORNILLO	5					
9	5D0–84359–00	CABLE DE FARO DELANTERO	1					
10	91380–05010	PERNO	1					

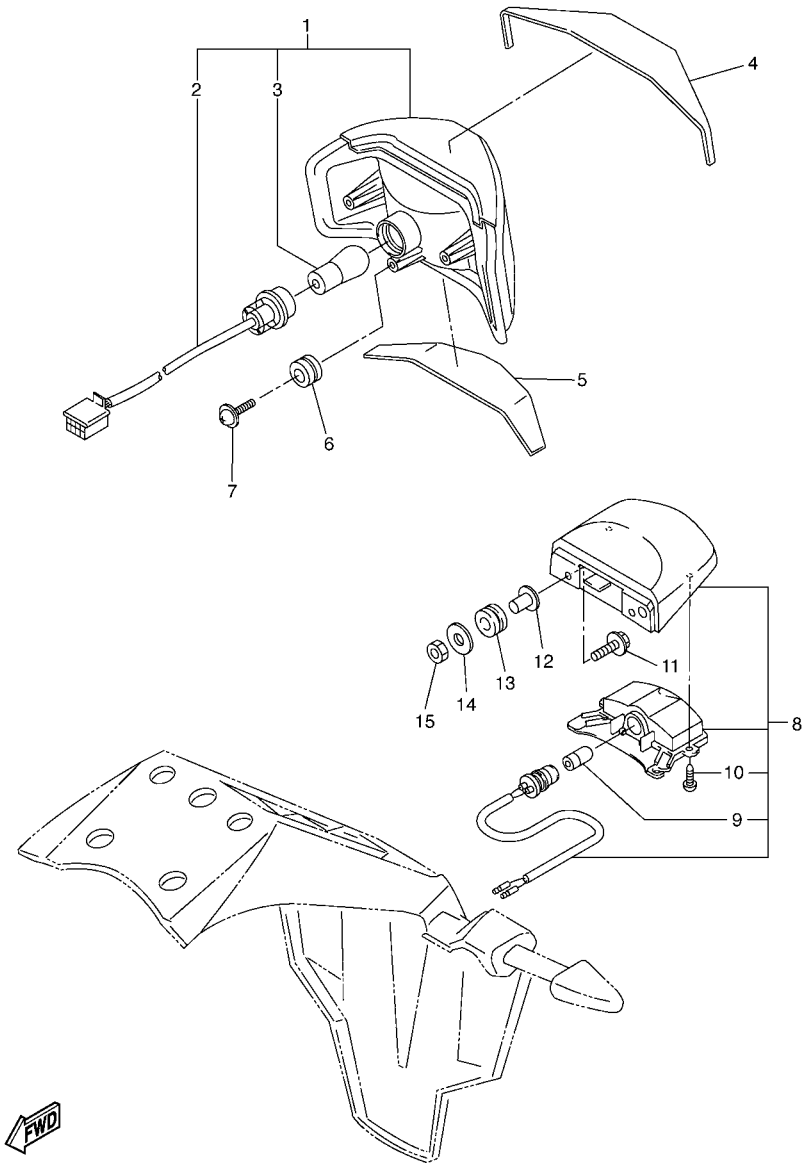

FIG. 44 LUZ DE COLA

REF. Nº	CODIGO Nº	DESCRIPCION	5D01					OBSERVACIONES
1	2D1–84710–00	UNIDAD FARO TRASERO COMPL.	1					
2	2D1–84735–00	.CABLE COMPLETA	1					
3	1A2–84714–41	.AMPOLLETA (12V-21/5W)	1					
4	3C3–84736–00	AMORTIGUADOR DE COLA	1					
5	2D1–84737–00	AMORTIGUADOR, TRASERO 2	1					
6	90480–18276	TAPON	3					
7	90164–05014	TORNILLO ROSCA HEMBRA	3					
8	2D1–84745–00	UNIDAD DE LUZ DE LICENCIA COMP	1					
9	4HC–84744–00	.BOMBILLA (12V-5W)	1					
10	97706–04012	.TORNILLO, ROSCA CHAPA	2					
11	90159–05011	TORNILLO CON VALONA	2					
12	90387–05031	ESPACIADOR	2					
13	90480–11009	TAPON	2					
14	92907–05200	ARANDELA	2					
15	95602–05100	TUERCA AUTOBLOCANTE	2					

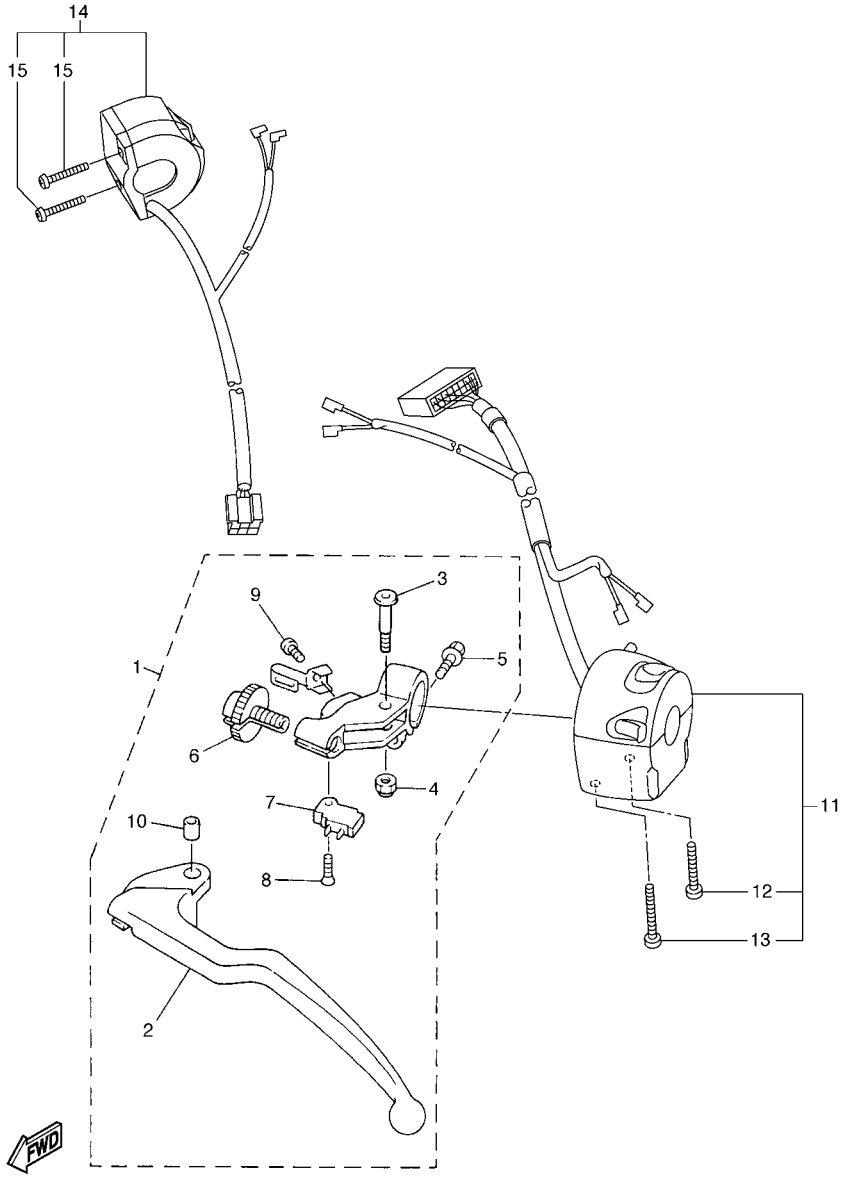

FIG. 45 INTERRUPTOR DE MANILLAR&PALANC

REF. Nº	CODIGO Nº	DESCRIPCION	5D01					OBSERVACIONES
1	4XV–82910–15	SOPORTE DE LEVA COMPLT 1	1					
2	4XV–83912–11	.PALANCA 1	1					
3	2C0–83945–00	.PERNO DE PALANCA	1					
4	95607–06200	.TUERCA DE AUTO-CIERRE	1					
5	95027–06020	.PERNO, DE BRIDA	1					
6	5LV–83951–00	.PERNO DE CABLE DE AJUSTE	1					
7	4XV–82917–01	.INTERRUPTOR	1					
8	98707–03016	.TORNILLO DE CABEZA PLANA	1					
9	98507–04010	.TORNILLO DE CABEZA PLANA	1					
10	5JJ–83913–00	.COLLAR DE PALANCA 1	1					
11	3C3–83969–00	INTERRUPTOR DE MANIJA 5	1					
12	98507–05030	.TORNILLO DE CABEZA PLANA	1					
13	98507–05045	.TORNILLO DE CABEZA PLANA	1					
14	2D1–83975–00	INTERRUPTOR DE MANIJA 2	1					
15	98507–05022	.TORNILLO DE CABEZA PLANA	2					

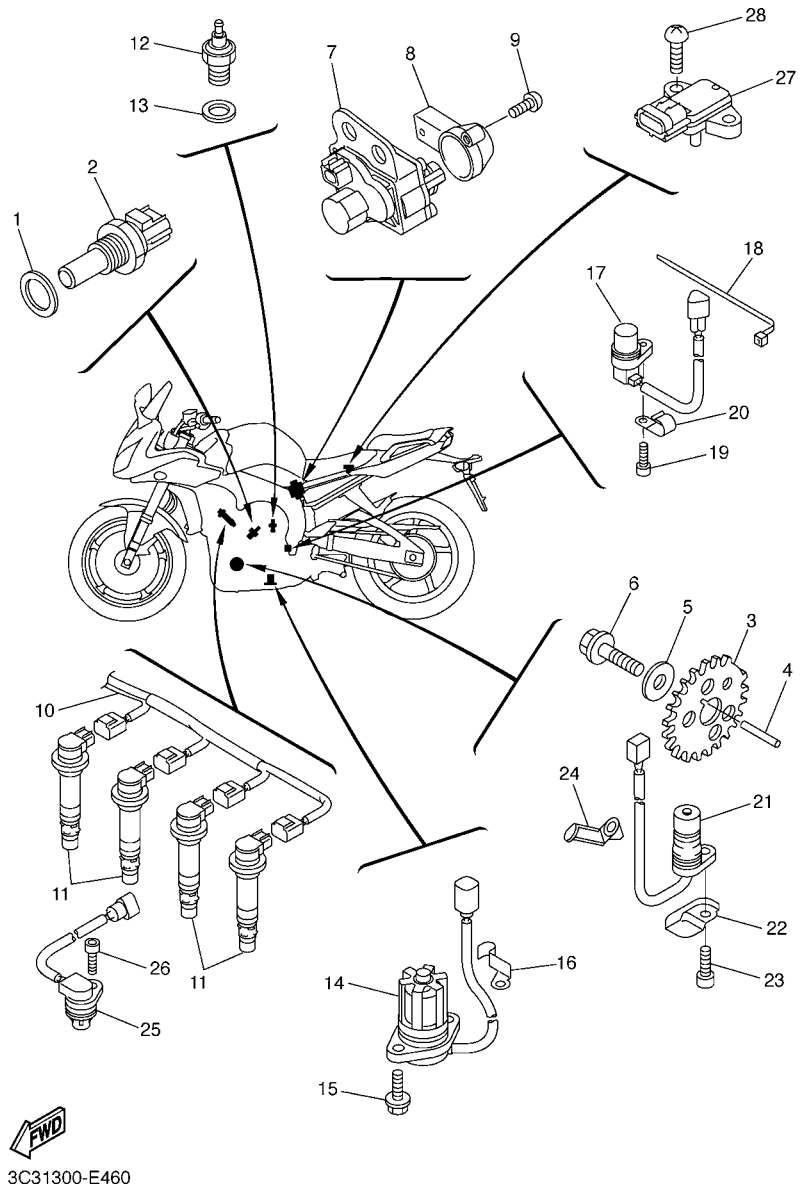

FIG. 46 EQUIPO ELECTRICO 1

REF. Nº	CODIGO Nº	DESCRIPCION	5D01					OBSERVACIONES
1	90201–12790	ARANDELA PLANA	1					
2	8CC–85790–01	TERMICA SENSORIO	1					
3	2D1–81673–00	ROTOR	1					
4	90282–03001	CHAVETA, RECTA	1					
5	90201–10039	ARANDELA PLANA	1					
6	90105–10290	TORNILLO	1					
7	2D1–85820–00	UNIDADDELSERVOMOTOR	1					
8	5VY–85829–00	CUBIERTA	1					
9	97702–50514	TORNILLO ROSCA HEMBRA	2					
10	2D1–82309–00	CABLE SUBCONDUCTOR	1					
11	5VY–82310–00	BOBINA DE ENCENDIDO COMPLETA	4					
12	3GB–82540–01	INTERRUPTOR NEUTRAL COMPL	1					
13	90430–10148	JUNTA	1					
14	5VY–85720–00	MEDIDOR DE NIVEL DE ACEITE	1					
15	95022–06016	PERNO, DE BRIDA	2					
16	90465–08053	BRIDA	1					
17	4XV–83755–02	SENSOR DE VELOCI	1					
18	90464–51001	BRIDA	1					
19	90110–06161	TORNILLO ALLEN	1					
20	90462–08057	BRIDA	1					
21	5VY–81670–01	RECOGEDOR COMPL.	1					
22	5VY–15589–00	PLACA DE CUBIERTA DE ARRANQUE	1					
23	90110–06161	TORNILLO ALLEN	1					
24	90465–08054	BRIDA	1					
25	5VY–85896–00	SENSOR DE LEVA	1					
26	90110–06175	TORNILLO ALLEN	1					
27	2C0–82380–00	SENSOR DE PRESION	1					

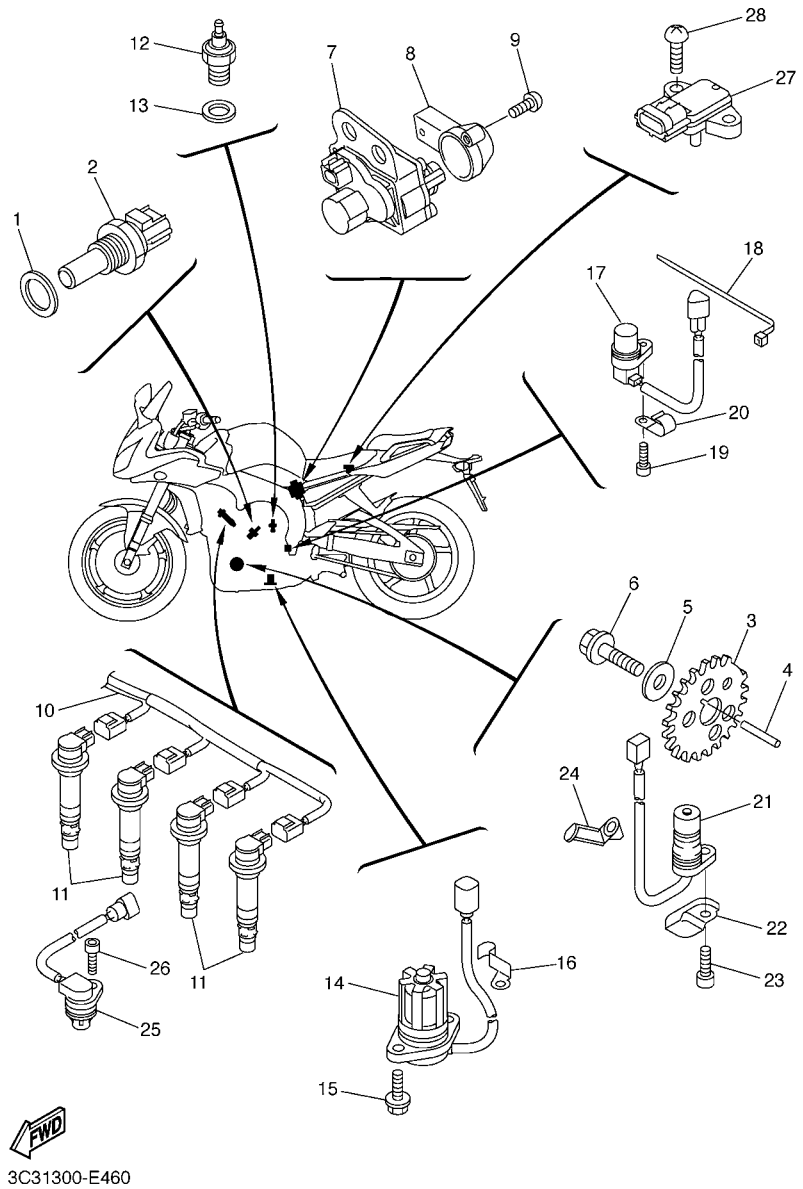

FIG. 46 EQUIPO ELECTRICO 1

REF. Nº	CODIGO Nº	DESCRIPCION	5D01					OBSERVACIONES
28	97702–60520	TORNILLO ROSCA HEMBRA	1					

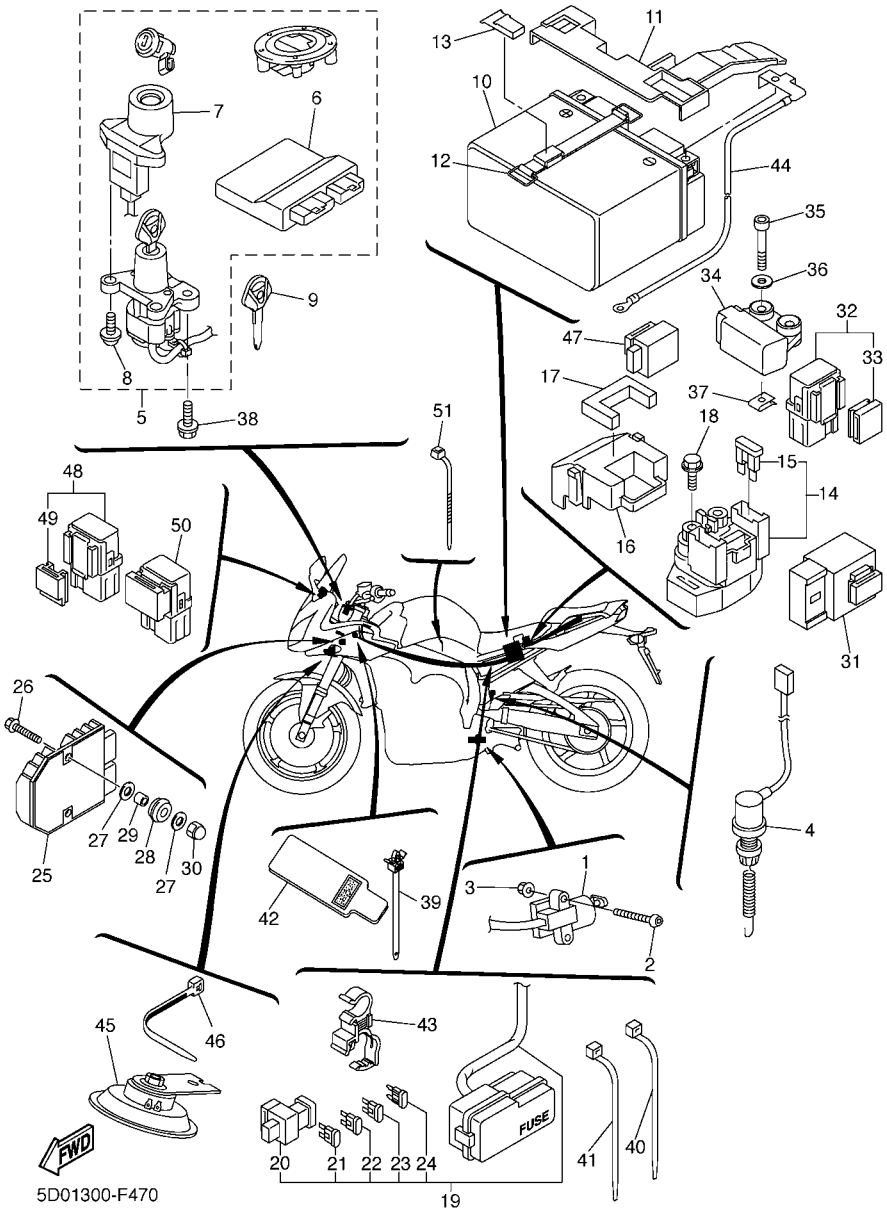

FIG. 47 EQUIPO ELECTRICO 2

REF. Nº	CODIGO Nº	DESCRIPCION	5D01					OBSERVACIONES
1	5VS–82566–61	INTERRUPTOR	1					
2	92017–05030	PERNO	2					
3	95607–05200	TUERCA DE AUTO-CIERRE	2					
4	2D1–82530–00	INTERRUPTOR DE PARADA COMPLETO	1					
5	2D1–W8250–01	JUEGO DE INMOVILIZADOR	1					
6	2D1–8591A–01	.UNIDAD CONTROL	1					
7	2D1–8255P–00	.UNIDAD INMOVILIZADORA	1					
8	5SL–82113–00	.TORNILLO	2					
9	5SL–82511–08	BLANK KEY	1					AP
10	2D1–82100–00	BATERIA (GS YUASA YTZ14S)	1					
11	2D1–82129–00	CUBIERTA DE BATERIA	1					
12	2D1–82131–00	TIRANTE DE BATERIA	1					
13	5YU–2162A–00	GANCHO	1					
14	2C0–81940–00	CONJUNTO ARRANCADOR RELEVO	1					
15	36Y–82151–00	.FUSIBLE (15A-BL)	2					
16	5SL–82119–10	CUBIERTA DE CABLE CONDUCTOR	1					
17	2D1–82176–00	AMORTIGUADOR	1					
18	95027–06008	PERNO, DE BRIDA	2					
19	5D0–82590–00	CONJUNTO DE CABLES	1					
20	5JW–82151–10	.FUSIBLE (50A)	1					
21	5JJ–82151–70	.FUSIBLE (25A-BL)	2					
22	5JJ–82151–10	.FUSIBLE (15A-BL)	2					
23	5JJ–82151–30	.FUSIBLE (10A-BL)	7					
24	5JJ–82151–60	.FUSIBLE (30A-BL)	2					
25	1D7–81960–00	RECTIFICADOR Y REGULADOR	1					
26	95822–06030	TORNILLO DE REBORDE	2					
27	90201–06380	ARANDELA PLANA	4					

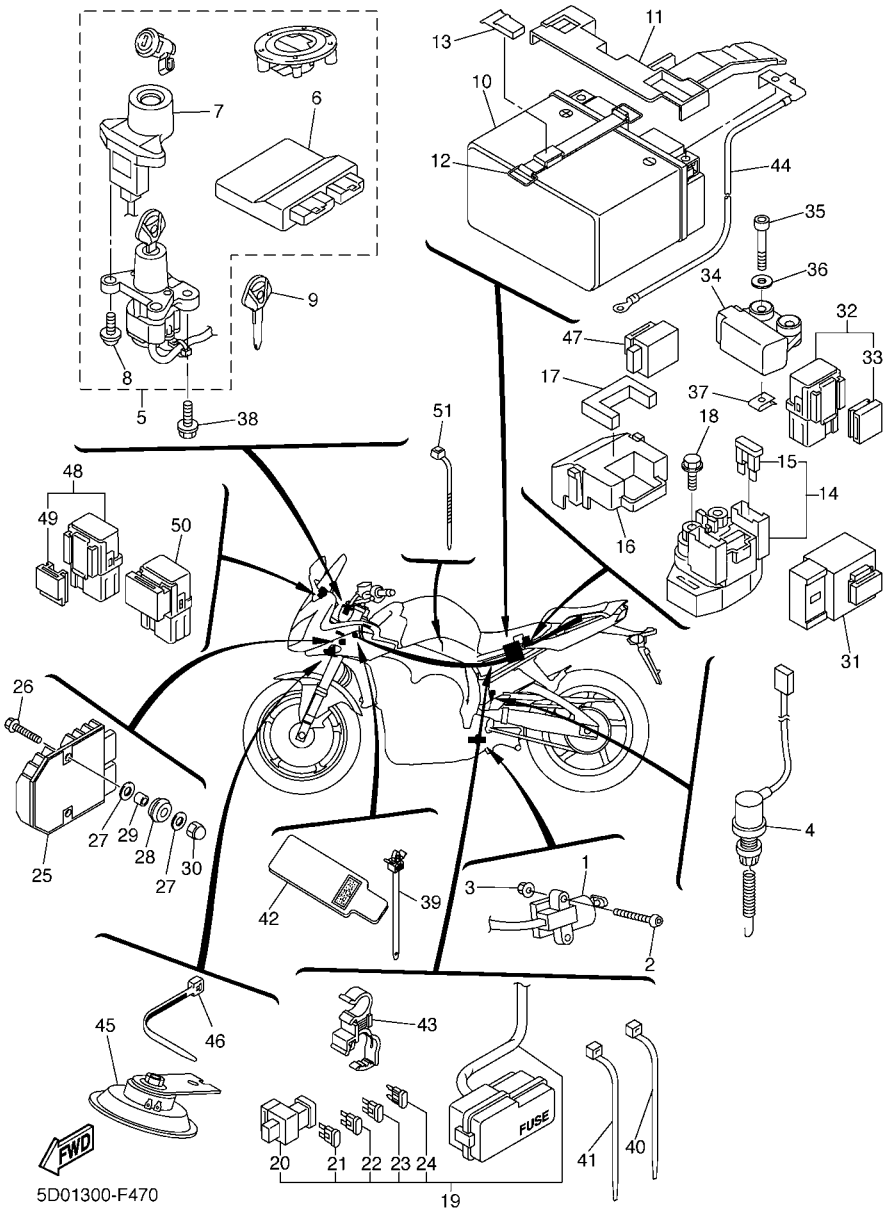

FIG. 47 EQUIPO ELECTRICO 2

REF. Nº	CODIGO Nº	DESCRIPCION	5D01					OBSERVACIONES
28	90480–12529	TAPON	2					
29	90387–067K6	ESPACIADOR	2					
30	95307–06800	TUERCA	2					
31	5VK–81950–40	RELE COMPLETO	1					
32	5JJ–81950–20	RELE COMPLETO	1					
33	5JJ–81952–00	.SOSTEN DE RELE	1					
34	5PS–82576–01	SENSOR ANGULO DE INCLINATION	1					
35	91317–04025	PERNO	2					
36	90201–047A2	ARANDELA PLANA	2					
37	90183–04039	TUERCA DE RESORTE	2					
38	90109–080G5	PERNO	2					
39	90464–12036	BRIDA	2					
40	1UA–82591–00	BANDA	2					
41	90464–13073	BRIDA	3					
42	2D1–82589–00	PROTECTOR DE ARNES DE CABLE	1					
43	90464–12012	BRIDA	1					
44	5D0–82116–00	CABLE CONDUCTOR NEGATIVO	1					
45	2D1–83371–00	BOCINA	1					
46	3MA–82591–00	BANDA	1					
47	4GY–83350–00	RELE DE DESTELLADOR COMPL.	1					
48	5EA–81950–20	RELE COMPLETO	1					
49	5EA–81952–00	.SOSTEN DE RELE	1					
50	5DM–81950–00	RELE COMPLETO	1					
51	1UA–82591–00	BANDA	1					

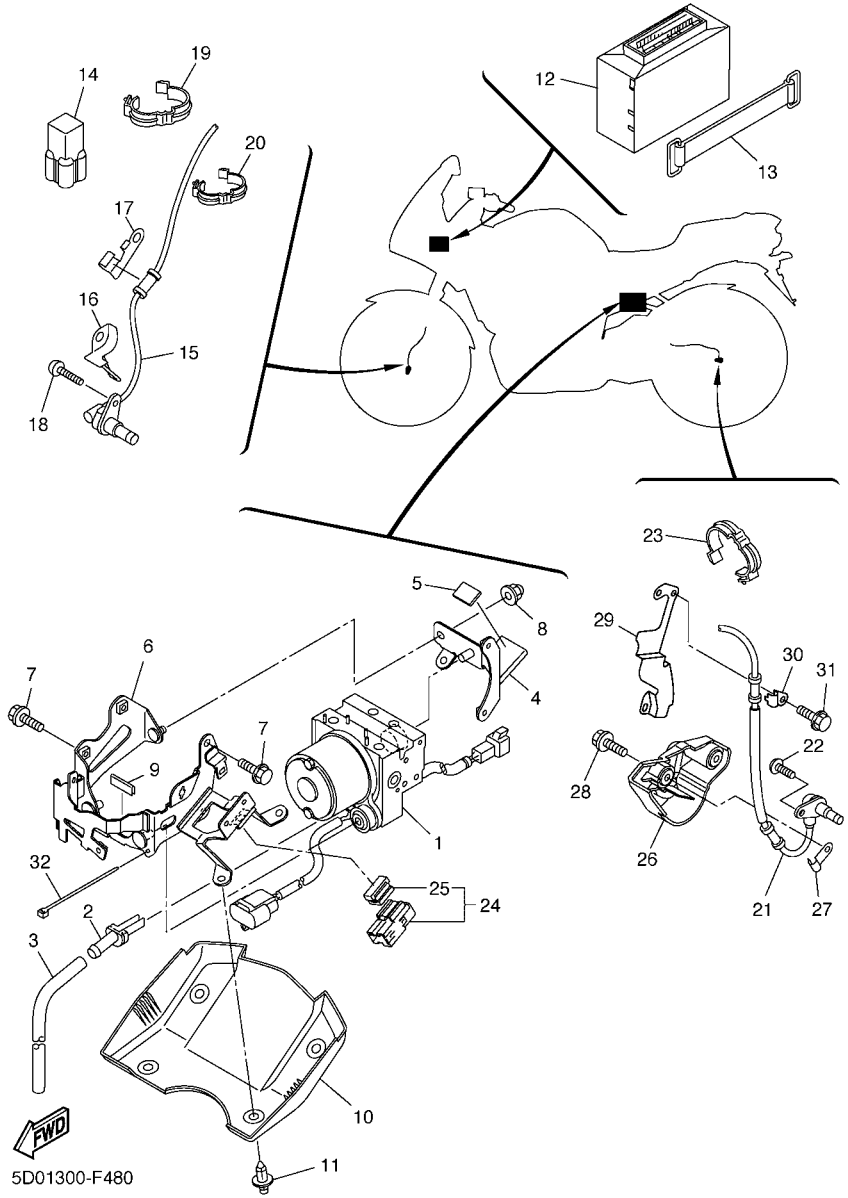

FIG. 48 EQUIPO ELECTRICO 3

REF. Nº	CODIGO Nº	DESCRIPCION	5D01					OBSERVACIONES
1	5D0–85930–00	UNIDAD DE HIDRAULICA	1					
2	5CG–24196–00	TAPON DE DRENAJE	1					
3	90445–10144	TUBO (L450)	1					
4	5D0–2175T–00	SOPORTE 1	1					
5	5YU–21639–00	AMORTIGUADOR 2	1					
6	5D0–2175U–00	SOPORTE 2	1					
7	95827–06012	TORNILLO	4					
8	90176–06008	TUERCA CORONA	1					
9	5YU–24188–00	MOLDURA DEPOSITO COMBUST.	1					
10	5D0–2172W–00	CUBIERTA	1					
11	90269–07077	REMACHE	4					
12	5D0–85940–00	UNIDAD DE CONTROL COMPLETA	1					
13	122–82131–00	TIRANTE DE BATERIA	1					
14	3YA–82378–00	CONECTOR	1					
15	5D0–85970–00	CONJUNTO DE CABLES	1					
16	5D0–23874–00	SOPORTE DE CABLE	1					
17	5D0–23358–00	MANGUERA	1					
18	92014–06014	PERNO	1					
19	90464–14003	BRIDA	1					
20	90464–12013	BRIDA	2					
21	5D0–85980–00	CONJUNTO DE CABLES	1					
22	92014–06014	PERNO	1					
23	90464–12013	BRIDA	3					
24	5JJ–81950–20	RELE COMPLETO	1					
25	5JJ–81952–00	.SOSTEN DE RELE	1					
26	5D0–27491–00	PROTECTOR	1					
27	5D0–8357E–00	GRAMPA	1					

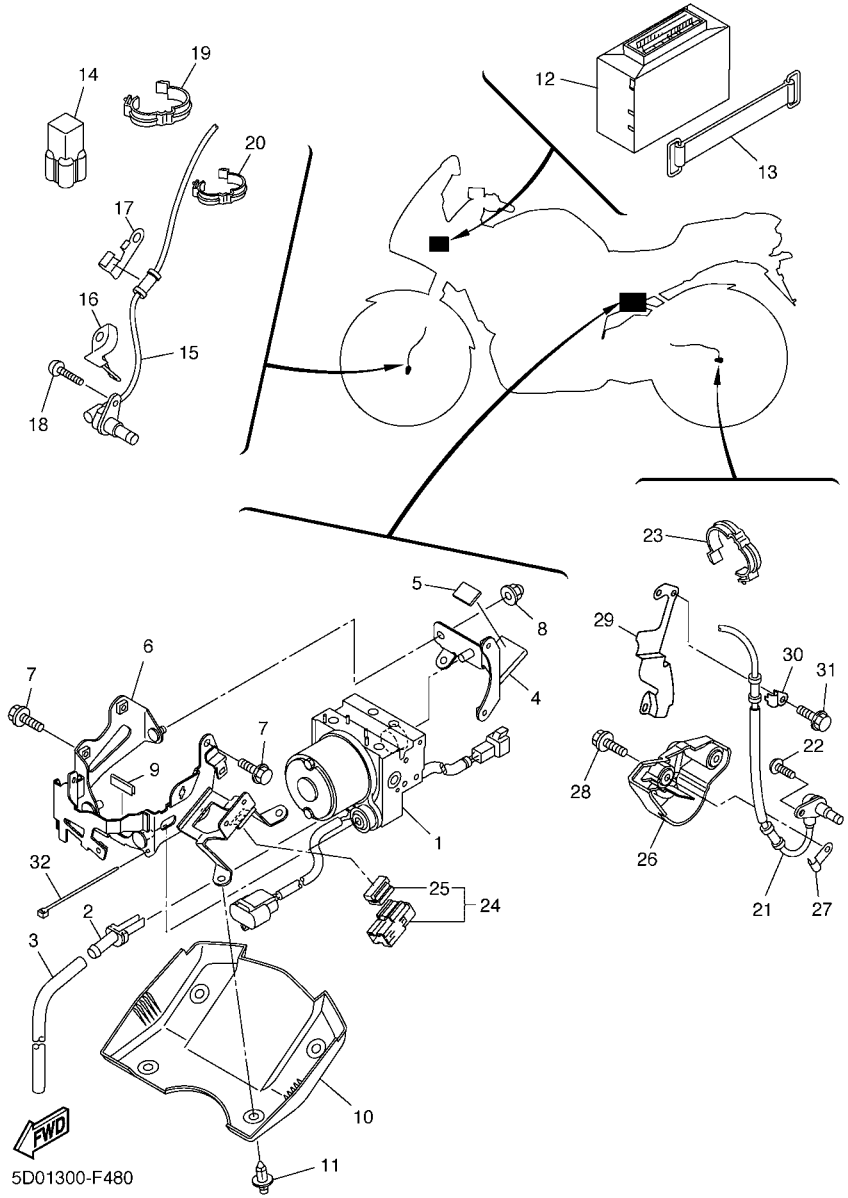

FIG. 48 EQUIPO ELECTRICO 3

REF. Nº	CODIGO Nº	DESCRIPCION	5D01					OBSERVACIONES
28	95824–06016	TORNILLO	2					
29	5D0–2216A–00	SOPORTE 4	1					
30	5D0–22465–00	SOSTEN	1					
31	95027–06010	PERNO, DE BRIDA	2					
32	90465–10098	BRIDA	1					

INDICE NUMERICO

CODIGO Nº	REF. Nº
2D1–11026–00	B – 3
5VY–11101–20	B – 2
5VY–1111G–00	B – 2
5VY–11133–10	B – 2
5VY–11134–10	B – 2
5VY–11165–00	C – 8
2D1–11181–00	B – 2
5VY–11191–02	B – 2
5VY–11193–10	B – 2
214–11198–01	B – 14
5VY–11311–10	B – 4
2D1–1133E–00	C – 5
2D1–1133F–10	C – 5
5VY–11351–00	B – 4
2D1–11411–00	B – 5
5VY–11416–00	B – 5
5VY–11416–10	B – 5
5VY–11416–20	B – 5
5VY–11416–30	B – 5
5VY–11416–A0	B – 5
5VY–11445–00	C – 9
5VY–11478–00	C – 9
2D1–11537–00	C – 9
5VY–11549–00	B – 5
5VY–11603–01	B – 5
5VY–11631–10	B – 5
5VY–11633–00	B – 5
4C8–11650–00	B – 5
5VY–11654–01	B – 5
2D1–11656–00	B – 5
2D1–11656–10	B – 5
2D1–11656–20	B – 5
2D1–11656–30	B – 5
5VY–12111–00	B – 6
5VY–12112–00	B – 6
2D1–12113–00	B – 6
2D1–12114–00	B – 6
5NL–12116–00	B – 6
1HX–12117–00	B – 6
1WG–12117–00	B – 6
1HX–12118–00	B – 6
1WG–12118–00	B – 6
4SV–12119–00	B – 6
4TV–12119–00	B – 6
5VY–12121–00	B – 6
3GM–12126–00	B – 6
3FV–12153–09	B – 7
3LN–12153–09	B – 7

CODIGO Nº	REF. Nº
3FV–12153–20	B – 7
3LN–12153–20	B – 7
3FV–12153–30	B – 7
3LN–12153–30	B – 7
1HX–12168–00	B – 6
1HX–12168–20	B – 6
1HX–12168–40	B – 6
1HX–12168–60	B – 6
1HX–12168–80	B – 6
1HX–12168–A0	B – 6
1HX–12168–F0	B – 6
1HX–12168–H1	B – 6
1HX–12168–K1	B – 6
1HX–12168–M1	B – 6
1HX–12168–R1	B – 6
1HX–12168–U1	B – 6
1HX–12168–W1	B – 6
1HX–12168–Y1	B – 6
1HX–12169–11	B – 7
1HX–12169–31	B – 7
1HX–12169–50	B – 7
1HX–12169–70	B – 7
1HX–12169–90	B – 7
1HX–12169–E0	B – 7
1HX–12169–G0	B – 7
1HX–12169–J0	B – 7
1HX–12169–L0	B – 7
1HX–12169–N0	B – 7
1HX–12169–T0	B – 7
2D1–12170–00	B – 8
5VY–12176–00	B – 8
2D1–12180–00	B – 8
5VY–12210–20	B – 8
2D1–12213–00	B – 8
3YL–12232–00	D – 3
5BE–12241–00	B – 2
5VY–12251–00	B – 8
5VY–12252–00	B – 8
5VY–12277–00	D – 12
2D1–12405–00	B – 11
2D1–12405–10	B – 11
3C3–1240J–00–P0	B – 12
3C3–1240K–00–P0	B – 12
2D1–12410–00	B – 11
5LP–12411–00	B – 11
5VY–12421–01	B – 9
5VY–12422–00	B – 9
11H–12438–10	B – 9

CODIGO Nº	REF. Nº
4XV–12439–00	B – 9
5VY–1243A–00	B – 11
2D1–1243E–00	B – 11
5VY–1243F–00	B – 11
5VY–12443–10	C – 8
2D1–1244G–00	B – 11
5VY–12450–11	B – 9
5VY–12456–10	B – 9
2D1–12461–00	B – 11
22W–12462–00	B – 11
2D1–12464–00	B – 12
2D1–12467–00	B – 12
5VY–12469–00	B – 9
5GV–1246A–00	B – 11
5VY–12481–10	B – 10
2D1–12484–00	B – 10
4XV–12485–00	B – 9
5VY–12485–10	B – 11
1AA–12535–00	B – 11
2D1–12551–00	B – 12
5VY–12576–00	B – 9
2D1–12578–00	B – 11
5VY–12579–00	B – 11
5VY–12588–00	B – 10
2D1–12589–00	B – 12
2D1–12637–00	B – 9
2D1–12675–00	B – 11
5EB–12822–00	B – 14
5VY–13117–10	B – 13
2D1–13160–00	C – 2
5VY–13161–00	B – 14
5VY–1316E–00	B – 13
5VY–13310–10	B – 9
5VY–13336–00	B – 9
5VY–13354–00	C – 11
5VY–13355–00	B – 9
5VY–13410–00	B – 13
4C8–13414–00	B – 14
5VY–13416–00	B – 13
2D1–13417–10	B – 14
5VY–13418–10	C – 6
5GH–13440–20	B – 14
5VY–13470–00	B – 14
5JW–13473–00	B – 14
5EB–13475–00	B – 14
5VY–13490–00	B – 14
5VY–13543–00	C – 3
8FP–13556–00	C – 3

CODIGO Nº	REF. Nº
5VY–13595–00	B – 15
5VY–13596–00	B – 15
5VY–13597–00	B – 15
5VY–13598–00	B – 15
2D1–13750–00	C – 2
5VY–13761–00	C – 3
5VY–13898–00	B – 13
2D1–13907–01	D – 14
2D1–13971–00	C – 3
5PW–14103–00	C – 3
5JW–14104–00	C – 3
4KM–14137–00	C – 2
5PS–14147–00	C – 3
5VY–14171–00	C – 2
5VY–14204–00	C – 2
8CC–14216–10	C – 2
3XV–14251–00	C – 2
5PW–14251–00	C – 2
5PW–14349–00	C – 2
5SL–14349–00	C – 2
5FL–14349–10	C – 2
5JW–14396–00	C – 2
2D1–14409–00	B – 15
2D1–1440B–00	B – 15
2D1–14411–00	B – 15
2D1–14413–00	C – 3
2D1–14421–00	B – 15
2D1–14451–00	B – 15
2D1–14452–00	B – 15
5VY–14457–00	B – 15
2D1–14462–00	B – 15
2D1–14498–00	B – 15
5JW–14589–00	C – 2
2D1–14602–00	C – 5
4FM–14613–00	C – 5
2D1–14703–00	C – 5
2D1–14718–10	C – 5
5JW–14723–00	C – 4
2D1–14737–00	C – 5
5VY–14755–00	C – 5
2D1–14799–00	C – 5
2D1–14826–00	C – 5
5VY–1482K–00	B – 2
2D1–14840–00	C – 4
5VY–14881–00	C – 4
5VY–14882–00	C – 4
5VY–14883–00	C – 4
5SL–14890–10	B – 2

CODIGO Nº	REF. Nº
5VY–14899–00	B – 2
5VY–14905–00	C – 3
5DM–14936–00	C – 2
22U–14952–00	C – 2
5PS–14987–00	C – 2
4C8–15100–00	C – 6
4B1–15113–00	C – 8
5EB–15155–00	C – 6
5VY–15163–00	C – 12
5VY–15164–00	C – 7
36Y–15189–00	C – 8
4H7–15189–00	C – 8
5PX–15189–00	C – 7
4C8–15191–00	F – 4
5VY–15316–00	C – 6
5PW–15361–00	C – 6
3F9–15362–00	C – 7
2D1–15393–00	B – 15
5VY–15411–00	C – 7
2D1–15413–00	C – 8
2D1–15416–00	C – 7
2D1–15418–00	C – 7
2D1–15421–00	C – 7
5VY–15431–00	C – 8
2D1–15441–00	C – 8
2D1–15451–10	C – 7
4C8–15456–00	C – 8
4C8–15461–00	C – 7
4C8–15462–00	C – 8
5VY–15515–00	C – 9
5VY–15517–00	C – 9
5VY–15521–00	C – 9
5VY–15542–00	C – 7
5VY–15570–00	C – 9
5VY–15586–00	C – 9
5VY–15589–00	F – 11
5VY–16150–00	C – 10
5VY–16154–00	C – 10
5VY–16155–00	C – 9
5VY–16164–00	C – 11
5VY–16181–00	C – 11
5VY–16321–00	C – 10
5VY–16325–00	C – 10
5VY–16330–00	C – 10
5VY–16331–00	C – 10
5VY–16340–00	C – 10
132–16346–00	C – 15
5VY–16351–00	C – 10

CODIGO Nº	REF. Nº
4XV–16356–01	C – 10
2D1–16370–00	C – 10
2D1–16382–00	C – 10
5VY–16383–00	C – 10
5VY–16384–00	C – 10
4X7–16385–00	C – 10
2D1–17121–10	C – 12
2D1–17131–00	C – 12
2D1–17151–00	C – 12
2D1–17161–00	C – 12
5VY–17211–00	C – 13
2D1–17221–00	C – 12
5VY–17231–00	C – 13
5VY–17241–00	C – 12
2D1–17251–01	C – 13
2D1–17261–00	C – 12
5VY–17402–00	C – 12
5VY–17411–00	C – 12
5VY–17442–00	C – 12
5VY–17446–00	C – 12
3CV–17460–00	C – 13
2D1–18101–00	C – 15
2D1–18110–00	C – 15
2D1–18112–00	C – 15
5EB–18113–00	C – 15
	E – 14
2D1–18115–00	C – 15
5VX–18116–00	C – 15
5VY–18127–10	C – 15
5VY–18140–00	C – 15
5VY–18144–00	C – 15
5VX–18154–00	C – 15
2D1–18511–00	C – 14
2D1–18512–00	C – 14
5VY–18513–01	C – 14
5VY–18531–00	C – 14
5VY–18535–00	C – 14
5VY–18536–00	C – 14
5VY–18540–00	C – 14
136–18542–00	C – 14
5VY–18562–00	C – 14
2D1–21110–30–P0	D – 2
2D1–2117G–00	D – 2
4XV–2117K–00	E – 2
2D1–2117N–00	D – 2
2D1–21190–10–P0	D – 2
3C3–21261–00	D – 6
2D1–21268–10	D – 3

INDICE NUMERICO

CODIGO Nº	REF. Nº
3C3–21341–01	E – 2
5D0–21345–00	D – 2
3YX–21376–00	D – 2
4XV–21376–00	D – 4
2D1–2139U–00	B – 12
5YU–2143A–00	D – 2
2D1–2144G–00	E – 12
5EB–21495–00	D – 2
5PW–21511–00–P6	D – 4
5PW–21511–00–PA	D – 4
3C3–21541–00	D – 4
5PA–21568–00	D – 15
2D1–21575–00	D – 3
5VS–21578–10	D – 4
3C3–21611–00	D – 6
3C3–21617–00	D – 5
2D1–21629–00	D – 5
5YU–2162A–00	F – 13
2D1–21639–00	D – 5
5YU–21639–00	F – 15
3C3–2163A–00	D – 5
2D1–21646–00	D – 4
2D1–21650–00	D – 9
5VY–21668–00	D – 9
2D1–21688–00	D – 5
2D1–216A2–00	D – 4
2D1–216A3–00	D – 4
2D1–21711–00	D – 7
2D1–21719–00	D – 7
3C3–2171A–00–P0	D – 14
3C3–2171A–00–P3	D – 15
5D0–21721–00	D – 7
5D0–2172W–00	F – 15
5PW–2174X–00	D – 5
2D1–2174Y–00	D – 2
5D0–2175T–00	F – 15
5D0–2175U–00	F – 15
26H–21828–00	D – 7
2D1–21871–00	D – 7
5VY–21875–00	D – 7
3C3–2193A–00	D – 5
5D0–22110–00	D – 8
2D1–22117–00	D – 8
5JJ–22128–00	D – 8
2D1–22141–00	D – 9
2D1–22151–00	D – 8
5D0–2216A–00	G – 2
2D1–2217A–00	D – 8

CODIGO Nº	REF. Nº
2D1–2217M–00	D – 8
2D1–22184–00	D – 8
5D0–22210–00	D – 10
5SL–22311–00	D – 8
5D0–22465–00	G – 2
3C3–22825–00	D – 5
3C3–22826–00	D – 5
5D0–23102–00	D – 12
5D0–23103–00	D – 12
5D0–23110–00	D – 12
2D1–23111–10	D – 12
5VY–23118–00	D – 12
5D0–23120–00	D – 12
4KM–23123–01	D – 13
2D1–23136–10	D – 12
2D1–23141–00	D – 12
4PU–23144–00	D – 12
4PU–23145–01	D – 12
4V4–23146–L0	D – 12
3XJ–23147–L0	D – 12
4V4–23153–L0	D – 12
509–23158–L0	D – 12
2D1–23170–01	D – 12
2D1–23170–11	D – 12
3D8–23181–00	D – 12
3C3–23318–00	D – 11
5D0–23319–00	D – 11
2D1–23340–00	D – 13
3LC–23357–00	D – 12
5D0–23358–00	F – 15
3C3–23378–00	E – 10
2D1–23405–00	D – 11
4XV–23415–01	D – 11
4XV–23418–00	D – 11
4XV–2341B–00	D – 11
4PX–23426–00	D – 3
3VD–23434–00	D – 11
2D1–23441–00	D – 11
2D1–23442–00	D – 11
5YU–23445–00	D – 11
3FV–23462–00	D – 11
5JW–23844–00	F – 2
5D0–23874–00	F – 15
2D1–24106–00	D – 15
2D1–24108–00	D – 15
2D1–24129–00	D – 2
2D1–2412G–00	D – 14
2D1–24139–00	D – 3

CODIGO Nº	REF. Nº
5SL–2413B–00	D – 15
2D1–2414H–00	D – 15
2D1–2414K–00	D – 15
2D1–2414N–00	D – 15
2D1–2414P–00	D – 15
2D1–2414R–00	D – 15
3ME–2415E–01	D – 15
2D1–24181–00	D – 15
3MA–24181–00	C – 5
5VX–24181–00	D – 14
5VY–24181–00	D – 14
2D1–24182–00	D – 4
2D1–24185–00	D – 2
5YU–24188–00	F – 15
2D1–24192–00	D – 14
5CG–24196–00	F – 15
2D1–24315–00	D – 14
2D1–24316–00	D – 14
2D1–24317–00	D – 14
68V–24376–00	C – 2
5JW–24486–00	D – 14
2D1–24491–00	D – 14
5JJ–24602–00	D – 14
2D1–24665–00	E – 2
2D1–24710–00	E – 2
2D1–24711–00	E – 2
3C3–2471K–00–P0	D – 4
3C3–2471K–00–P2	D – 5
3C3–2471K–00–P3	D – 5
3C3–24723–00	D – 4
3C3–24724–00	D – 4
4HM–24728–00	E – 2
3C3–2472K–00–P0	D – 5
3C3–2472K–00–P2	D – 5
3C3–2472K–00–P3	D – 5
3C3–24737–00	D – 4
22W–24741–00	D – 5
3C3–24741–00	E – 2
3C3–24747–00	D – 4
3C3–24750–00	E – 2
3C3–24751–00	E – 2
2D1–2476U–00	E – 2
2D1–2476V–00	E – 2
3C3–24773–00–P0	D – 4
3C3–24773–00–P2	D – 4
3C3–24773–00–P3	D – 4
4BP–24780–00	E – 2
2D1–24780–02	E – 2

CODIGO Nº	REF. Nº
2D1–24785–00	E – 2
2D1–2478E–00	E – 2
4BP–24792–00	E – 2
5EA–25117–00	E – 3
4P5–2517A–00–98	E – 3
4XV–25181–10	E – 3
5PW–25317–00	E – 5
5D0–25338–00–98	E – 5
5VX–25364–00	E – 5
2D1–25366–00	E – 5
2D1–25377–00	E – 5
4P5–2537G–00	E – 5
2D1–25381–00	E – 6
2D1–25383–00	E – 5
5VY–25388–00	E – 5
5VY–25389–00	E – 5
5MT–25398–00	E – 3
	E – 5
5MT–25398–10	E – 3
	E – 5
5MT–25398–20	E – 3
	E – 5
2D1–25445–20	E – 5
2D1–2580T–00	E – 4
5D0–2580U–00	E – 4
5D0–2580W–00	E – 7
5D0–2581J–00	E – 15
5D0–2581T–00	E – 4
5SL–25827–00	E – 7
5SL–25827–10	E – 7
5SL–25828–00	E – 7
2D1–2582A–00	E – 14
2D1–2582W–00	E – 7
5SL–25838–00	E – 7
5D0–2583H–00	E – 15
4P5–2583V–00	E – 14
5D0–2584A–00	E – 9
5D0–2584B–00	E – 9
5SL–25852–00	E – 14
5VS–25852–00	E – 9
5SL–25854–00	E – 14
5VS–25854–00	E – 9
5SL–25855–00	E – 14
5VS–25855–00	E – 9
4BP–2585F–00	E – 14
3LN–2585G–00	E – 14
5VS–25867–00	E – 9
5D0–25872–00	E – 9

CODIGO Nº	REF. Nº
5D0–25874–00	E – 14
5D0–25875–00	E – 9
5D0–25876–00	E – 9
5D0–2587A–00	E – 15
5D0–25886–00	E – 14
2D1–25887–00	D – 8
5D0–2588F–00	E – 9
5D0–2588G–00	E – 10
2D1–25894–00	E – 14
5D0–25895–00	E – 14
5VS–2589F–00	E – 9
5VS–2589H–00	E – 9
5SL–25914–00	E – 7
5DH–25916–00	E – 7
3JD–25917–00	E – 7
5SL–25917–00	E – 7
4SV–25919–00	E – 4
5SL–25919–00	E – 7
5D0–25921–50	E – 7
4SV–25924–00	E – 4
8CR–25924–00	E – 7
3GM–25925–00	E – 4
5SL–25926–00	E – 7
2D1–26111–01	E – 8
5D0–2612K–00	E – 10
4YR–26240–02	E – 8
4YR–26241–02	E – 8
51J–26246–01	E – 8
3C3–26280–00	F – 3
3LN–26281–01	E – 8
4BP–26282–00	E – 8
3C3–26290–00	F – 3
5D0–26292–00	E – 10
3C3–26298–00	F – 3
2D1–26302–00	E – 8
5VS–26332–00	E – 9
3C3–26335–00	E – 8
3C3–27111–00	E – 13
278–27114–00	E – 2
371–27114–00	E – 13
5VX–27114–00	E – 11
3C3–27151–01	E – 13
5D0–27152–00	E – 13
2D1–27211–00	E – 14
4BP–27222–01	E – 14
2D1–27311–00	E – 11
2D1–27321–00	E – 11
2D1–27410–00	E – 11

CODIGO Nº	REF. Nº
4BP–27413–00	E – 11
1HX–27415–00	E – 11
2D1–2741L–00	E – 12
2D1–27420–00	E – 11
1NL–27424–00	E – 11
36Y–27424–01	E – 13
2D1–27425–02	D – 3
2D1–2742L–00	E – 12
3VR–27431–01	E – 12
5VX–27437–00	E – 12
3VR–27441–01	E – 12
2D1–27442–00	E – 11
2D1–27443–00	E – 12
2D1–27486–00	E – 11
2D1–27487–00	E – 12
5D0–27491–00	F – 15
3C3–274A3–00	E – 13
2D1–28100–00	D – 6
3P6–28307–00	F – 2
3C3–28315–00	F – 2
3C3–28315–30	F – 2
2D1–28345–01	D – 15
3C3–2834E–00	F – 3
4XV–2834E–00	D – 15
	F – 2
3C3–2834F–00	F – 3
5D0–28356–00	F – 3
3C3–2835U–00	F – 3
3C3–2835V–00	F – 3
3C3–2836A–00	F – 3
4KN–2836B–00	D – 6
3C3–2836E–00	F – 3
3C3–2836K–00	F – 2
3C3–2836L–00	F – 2
3C3–28371–01	F – 2
3C3–28372–00	F – 2
3C3–2837J–00	F – 2
5D0–2837K–00	F – 3
3C3–28381–00	F – 2
3C3–283B1–00	F – 2
3C3–283B1–10	F – 2
5D0–81410–00	F – 4
5VY–81450–00	F – 4
5VY–81670–01	F – 11
2D1–81673–00	F – 11
3AJ–81801–00	F – 5
2D1–81815–00	F – 5
2D1–81826–00	F – 5

INDICE NUMERICO

CODIGO Nº	REF. Nº
4XV–8182A–00	F – 5
11H–81844–00	F – 5
1FK–81847–00	F – 5
2D1–81890–00	F – 5
2C0–81940–00	F – 13
5DM–81950–00	F – 14
5EA–81950–20	F – 14
5JJ–81950–20	F – 14
	F – 15
5VK–81950–40	F – 14
5EA–81952–00	F – 14
5JJ–81952–00	F – 14
	F – 15
1D7–81960–00	F – 13
2D1–82100–00	F – 13
5SL–82113–00	F – 13
5D0–82116–00	F – 14
5SL–82119–10	F – 13
2D1–82122–10	D – 4
2D1–82129–00	F – 13
2D1–8212B–01	D – 4
122–82131–00	F – 15
18G–82131–00	E – 2
2D1–82131–00	F – 13
36Y–82151–00	F – 13
5JJ–82151–10	F – 13
5JW–82151–10	F – 13
5JJ–82151–30	F – 13
5JJ–82151–60	F – 13
5JJ–82151–70	F – 13
2D1–82176–00	F – 13
2D1–82309–00	F – 11
5VY–82310–00	F – 11
3YA–82378–00	F – 15
1C7–82380–00	C – 2
2C0–82380–00	F – 11
2D1–82386–00	C – 2
5SL–82511–08	F – 13
2D1–82530–00	F – 13
3GB–82540–01	F – 11
2D1–8255P–00	F – 13
5VS–82566–61	F – 13
5PS–82576–01	F – 14
2D1–82589–00	F – 14
5D0–82590–00	F – 13
1UA–82591–00	D – 2
	F – 14
3MA–82591–00	F – 14

CODIGO Nº	REF. Nº
4XV–82910–15	F – 10
4XV–82917–01	F – 10
5PW–83310–01	F – 6
1KH–83311–00	F – 6
2D1–83318–00	F – 6
5PW–83320–01	F – 6
2D1–83330–20	F – 6
5PW–8333A–00	F – 6
2D1–83340–20	F – 6
5PW–8334A–00	F – 6
4GY–83350–00	F – 14
2D1–83371–00	F – 14
5D0–83500–00	F – 7
3C3–83513–00	F – 7
5D0–8357E–00	F – 15
4XV–83755–02	F – 11
4XV–83912–11	F – 10
5JJ–83913–00	F – 10
5VS–83922–00	E – 9
2C0–83945–00	F – 10
5LV–83951–00	F – 10
3C3–83969–00	F – 10
2D1–83975–00	F – 10
4HM–83980–00	E – 9
3C3–84310–00	F – 8
3C3–84312–00	F – 8
8V0–84314–00	F – 8
4SV–84347–00	F – 8
5D0–84359–00	F – 8
5LV–84397–00	F – 8
2D1–84710–00	F – 9
1A2–84714–41	F – 9
2D1–84735–00	F – 9
3C3–84736–00	F – 9
2D1–84737–00	F – 9
4HC–84744–00	F – 9
2D1–84745–00	F – 9
3Y6–85130–02	D – 6
5VY–85720–00	F – 11
8CC–85790–01	F – 11
2D1–85820–00	F – 11
5VY–85829–00	F – 11
5VY–85850–00	C – 2
5FL–85885–02	C – 2
8FP–85886–00	B – 15
5VY–85896–00	F – 11
2D1–8591A–01	F – 13
2D1–8592A–00	C – 5

CODIGO Nº	REF. Nº
5D0–85930–00	F – 15
5D0–85940–00	F – 15
5D0–85970–00	F – 15
5D0–85980–00	F – 15
5D0–F8199–S0	D – 6
2D1–W0041–00	E – 9
5VX–W0042–50	E – 14
5SL–W0045–00	E – 4
5VX–W0046–00	E – 7
5SL–W0047–00	E – 7
3GM–W0047–10	E – 4
3MA–W0047–10	E – 4
1J3–W0048–00	E – 4
5VS–W0048–00	E – 4
8CR–W0048–00	E – 7
4SV–W0057–00	E – 4
5SL–W0057–00	E – 7
4SV–W0057–10	E – 4
2TV–W2470–00	E – 2
5D0–W2516–00–98	E – 3
5D0–W2587–00	E – 9
2D1–W8250–01	F – 13
3C3–Y283G–F0–P0	F – 2
3C3–Y283G–J0–P4	F – 2
3C3–Y283G–K0–P4	F – 2
3C3–Y283W–10	F – 2
2D1–YK241–00–P3	D – 14
2D1–YK241–00–P4	D – 14
2D1–YK241–00–P5	D – 14
90101–08013	E – 6
90101–10004	E – 13
90101–10006	E – 11
90105–05015	E – 5
90105–06026	B – 2
90105–06050	D – 11
90105–06065	B – 9
90105–06066	B – 9
90105–06078	F – 4
90105–06400	E – 9
90105–06556	E – 10
90105–07006	B – 8
90105–08101	C – 6
90105–08447	D – 5
90105–10030	D – 8
90105–10290	F – 11
90105–10323	D – 9
	D – 10
90105–10638	E – 4

CODIGO Nº	REF. Nº
90109–05005	B – 15
90109–06014	C – 8
90109–06015	B – 12
	C – 8
90109–06016	C – 7
90109–06031	C – 7
	D – 4
90109–06100	C – 6
90109–063F1	D – 4
90109–066F0	B – 2
90109–067E6	B – 12
90109–080G5	F – 14
90109–08170	C – 5
90109–08174	E – 11
90109–085G6	E – 13
90109–101E6	E – 13
90109–103A9	E – 11
90109–105G7	E – 13
90110–05014	D – 14
90110–05112	D – 14
90110–06102	D – 8
90110–06108	C – 8
90110–06110	C – 5
90110–06112	C – 7
90110–06161	B – 10
	B – 13
	C – 6
	F – 11
90110–06164	C – 12
90110–06167	B – 9
90110–06168	B – 11
	C – 8
90110–06173	B – 13
90110–06174	B – 10
90110–06175	F – 11
90110–06176	C – 9
90110–06178	B – 2
90110–06182	B – 13
	B – 14
	C – 8
	C – 14
90110–06200	F – 2
90110–06233	D – 15
90110–06255	C – 7
90110–08068	C – 7
90110–08071	E – 11
90110–10005	D – 2
90110–10010	E – 11

CODIGO Nº	REF. Nº
90111–05015	E – 11
90111–05019	D – 15
90111–05024	D – 15
90111–06019	C – 15
	D – 2
90111–06031	B – 12
90111–06043	D – 4
90111–06060	C – 5
90111–06079	B – 12
90111–06080	B – 12
90111–06085	E – 15
90116–10023	C – 6
90116–10032	C – 6
90116–10485	E – 5
90119–05020	E – 14
90119–06228	D – 7
90119–09003	C – 6
90149–06006	E – 2
90149–06026	D – 2
90149–06043	E – 4
90149–06064	C – 7
90149–06067	F – 4
90149–06165	D – 7
90149–06302	D – 9
90149–08009	E – 7
90150–05024	F – 2
90151–06022	C – 8
90153–06002	B – 10
90154–05007	F – 2
90154–05012	D – 14
90157–05025	E – 11
90157–10001	D – 2
90159–05011	F – 9
90159–05083	D – 5
90159–06026	C – 10
90164–05014	F – 7
	F – 8
	F – 9
90170–06228	C – 15
90170–08010	E – 14
90176–06008	F – 15
90176–06014	B – 11
90176–10075	B – 2
90176–28083	D – 11
90179–05003	D – 15
90179–05523	F – 2
90179–08410	C – 5
90179–10006	B – 2

CODIGO Nº	REF. Nº
90179–10696	D – 2
90179–20007	C – 10
90179–22011	C – 13
90179–30691	D – 11
90183–04039	F – 14
90183–05024	D – 5
90183–05076	F – 2
90183–06053	F – 2
90185–10009	E – 5
90185–10037	E – 11
90185–18167	D – 9
90185–24007	E – 6
90201–04015	E – 10
90201–047A2	F – 14
90201–05017	C – 5
90201–05725	D – 6
90201–06034	B – 2
90201–06079	B – 10
90201–060A3	D – 14
90201–06380	F – 13
90201–06431	C – 7
90201–06589	C – 9
90201–08057	E – 6
90201–08083	E – 14
90201–10008	D – 2
90201–10021	E – 5
90201–10029	C – 11
90201–10033	B – 2
90201–10039	F – 11
90201–10141	D – 11
90201–101J1	E – 11
90201–10669	E – 13
90201–12575	C – 15
90201–12790	F – 11
90201–16020	E – 11
90201–18013	D – 9
90201–20016	C – 9
90201–20017	C – 9
90201–25020	E – 6
90201–257H0	C – 13
90201–281U8	D – 11
90202–05088	D – 15
90202–05224	D – 15
90202–06170	F – 2
90202–30235	D – 11
90206–17084	E – 11
90208–20001	C – 10
90209–08295	E – 11

INDICE NUMERICO

CODIGO Nº	REF. Nº
90209–25011	C – 12
90209–28008	C – 12
90214–25003	C – 12
90214–25004	C – 12
90214–28002	C – 13
90214–29002	C – 12
90215–30233	C – 13
90240–08124	E – 14
90267–32012	E – 10
90269–06001	D – 2
90269–06003	D – 3
90269–06008	F – 3
90269–07007	D – 8
90269–07008	D – 8
90269–07076	D – 5
90269–07077	D – 4
	F – 15
90282–03001	F – 11
90338–08163	D – 11
90340–12003	C – 8
90340–14132	B – 14
90340–18002	B – 2
90340–32004	C – 7
90387–05031	F – 9
90387–06009	D – 8
90387–0600V	D – 9
90387–06026	D – 2
90387–06112	B – 10
90387–06130	D – 8
90387–061W6	D – 14
90387–062M9	D – 7
90387–062Y6	D – 15
90387–064T3	F – 3
90387–065J6	D – 4
90387–067K6	F – 14
90387–06M60	C – 5
90387–07391	B – 12
90387–0804S	C – 15
90387–09003	D – 5
90387–10043	D – 9
	D – 10
90387–10050	E – 11
90387–1012A	D – 8
	D – 10
90387–10636	E – 13
90387–1211D	C – 15
90387–22002	E – 3
90387–25007	C – 12

CODIGO Nº	REF. Nº
90387–25008	C – 13
90387–28001	E – 5
90387–28003	C – 12
90387–28004	C – 12
90387–31003	C – 12
90401–10172	E – 9
	E – 14
90401–20145	B – 14
90413–07007	D – 14
90413–07023	B – 11
90430–06014	B – 2
	B – 10
90430–06166	C – 6
90430–08143	C – 7
90430–10005	E – 9
	E – 14
90430–10148	F – 11
90445–08022	D – 7
90445–087K6	D – 7
90445–10144	F – 15
90445–19002	E – 11
90445–19003	E – 13
90446–15386	E – 14
90450–22017	B – 12
90450–32001	B – 10
	B – 12
90450–35001	B – 11
90450–38040	B – 9
	B – 11
90450–62002	B – 15
90461–10010	D – 14
90462–08057	F – 11
90464–04001	C – 5
	E – 9
90464–07259	D – 4
90464–07M40	D – 7
90464–10008	E – 8
90464–12012	F – 14
90464–12013	F – 15
90464–12036	F – 14
90464–13073	B – 11
	F – 14
90464–14003	F – 15
90464–15192	E – 10
90464–16021	D – 5
90464–17003	D – 8
90464–20003	F – 2
90464–20191	E – 8

CODIGO Nº	REF. Nº
90464–23002	B – 12
90464–28003	C – 4
90464–30040	C – 3
90464–51001	F – 11
90464–62085	F – 2
90465–08053	F – 11
90465–08054	F – 11
90465–10098	G – 2
90467–08075	D – 7
90467–09006	D – 14
90467–11090	B – 11
90467–120A3	E – 14
90467–12191	E – 14
90467–14015	B – 15
90467–14171	B – 15
90467–17128	C – 4
90467–180A0	C – 4
90467–18172	C – 4
90467–200A0	B – 10
	B – 12
90480–01333	D – 2
90480–01559	D – 7
90480–08264	B – 15
90480–11009	F – 9
90480–12003	D – 9
90480–12010	B – 10
90480–12072	D – 4
90480–12314	D – 15
90480–12529	F – 14
90480–13004	D – 5
90480–13010	B – 13
90480–13014	C – 8
90480–14013	D – 2
90480–14229	F – 8
90480–14604	C – 5
90480–15363	B – 11
90480–18276	F – 9
90480–20001	D – 7
90501–064L1	C – 14
90501–12743	E – 12
90501–230A0	C – 10
90506–18008	E – 11
90506–20014	E – 14
90506–23010	E – 13
90506–40007	E – 13
90508–18051	C – 10
90508–32020	C – 15
91312–06025	B – 14

CODIGO Nº	REF. Nº
91312–06040	B – 9
91312–06080	F – 5
91314–06020	B – 8
91314–06105	B – 2
91314–08030	D – 11
	D – 13
91314–08040	D – 13
91317–04025	F – 14
91317–05010	D – 14
91317–05020	E – 8
91317–05025	E – 8
91317–06016	D – 14
91317–06090	D – 14
91317–08030	D – 11
91380–05010	F – 8
91380–06014	C – 5
	C – 8
91401–20012	E – 14
91401–25015	E – 12
91492–12010	C – 2
91702–08040	E – 12
91808–16023	B – 2
91808–30031	B – 9
92012–06014	D – 8
92014–06014	F – 15
92014–08012	C – 7
92014–08020	E – 14
92017–05030	F – 13
92502–06010	C – 2
92902–04100	E – 9
92902–04600	E – 9
92907–05200	F – 9
92907–08600	C – 10
92907–10200	D – 11
92990–03100	C – 2
92990–06600	C – 5
93102–12106	C – 15
93102–12372	B – 9
93102–15212	C – 10
93102–40330	C – 13
93106–28043	E – 3
93106–40013	E – 5
93109–17071	D – 8
93210–04092	C – 6
93210–06667	B – 10
	B – 13
93210–09165	B – 13
93210–14003	B – 13

CODIGO Nº	REF. Nº
93210–14003	C – 6
93210–15566	B – 14
93210–16325	C – 8
93210–18397	C – 9
93210–22298	B – 13
93210–22382	C – 7
93210–235A1	B – 10
	B – 11
93210–27194	C – 7
93210–27370	B – 10
93210–32172	C – 7
93210–357A2	B – 9
93210–47675	B – 9
93210–49046	B – 11
93210–57003	C – 8
93305–20605	C – 12
93306–00106	B – 9
	C – 14
93306–00304	C – 10
93306–00420	E – 3
93306–20124	C – 7
93306–20230	C – 9
93306–20531	E – 5
93306–205A2	C – 13
93306–20652	C – 12
93306–27208	C – 12
93310–232R9	C – 10
93315–31502	C – 10
93315–31758	D – 8
93315–41762	D – 8
93315–42536	D – 8
93317–11096	C – 10
93317–11295	C – 15
93317–33590	E – 5
93317–42599	D – 8
93399–99932	D – 11
93399–99957	D – 11
93420–61M07	E – 5
93440–28184	C – 12
93440–31187	C – 12
93440–52009	C – 13
93440–62032	C – 13
93450–18157	B – 5
93501–04011	E – 12
93603–12007	B – 9
93603–17070	B – 9
93605–10108	C – 7
93607–44002	B – 8

CODIGO Nº	REF. Nº
93610–20189	C – 7
93900–00030	E – 3
	E – 5
94112–17094	E – 3
94119–17062	E – 5
94580–25078	B – 13
94582–10122	E – 6
94591–60122	B – 8
94682–05031	E – 6
94701–00403	B – 2
95022–06016	F – 11
95022–06020	C – 15
95024–06012	B – 2
95024–06025	B – 9
95024–10040	D – 2
95027–06008	F – 13
95027–06010	E – 9
	G – 2
95027–06014	E – 10
95027–06020	E – 10
	F – 10
95302–08600	E – 6
95304–06700	C – 15
95307–06800	F – 14
95602–05100	F – 9
95604–10200	D – 2
95607–05100	D – 6
95607–05200	F – 13
95607–06200	D – 4
	E – 2
	F – 10
95607–10200	D – 9
	D – 10
	D – 11
	E – 13
95612–08625	B – 2
95617–06100	E – 9
95702–06500	C – 5
	E – 2
95702–08500	D – 5
95707–06500	E – 9
	F – 3
95807–06010	F – 3
95807–06012	B – 12
95812–06050	C – 6
95812–06060	C – 6
95812–06070	C – 6
95812–08016	D – 3

CODIGO Nº	REF. Nº
95812–08050	C – 6
95812–08060	C – 6
95814–08030	C – 5
95814–10040	E – 13
95817–08025	D – 6
95822–06014	D – 5
95822–06030	F – 13
95822–08025	D – 5
95822–08030	D – 5
95824–06016	G – 2
95827–06012	F – 15
95827–06020	D – 6
	E – 2
95827–06025	D – 5
95827–08035	F – 3
97702–50025	B – 15
97702–50514	F – 11
97702–50520	B – 15
97702–60520	F – 12
97706–04012	F – 6
	F – 9
97707–50016	D – 6
	F – 8
98502–04012	E – 9
98502–05014	C – 2
98502–06012	C – 2
98507–03016	C – 2
98507–04010	F – 10
98507–05022	F – 10
98507–05030	F – 10
98507–05045	F – 10
98507–06008	E – 12
98507–06020	C – 3
98707–03016	F – 10
98907–05008	D – 14
99001–07600	C – 10
99002–10600	C – 15
99009–10400	C – 11
99480–10018	C – 7
99530–08012	B – 14
99530–10014	C – 6
99530–10114	B – 2
	B – 4

CODIGO Nº	REF. Nº

CODIGO Nº	REF. Nº

CODIGO Nº	REF. Nº

CODIGO Nº	REF. Nº

CODIGO Nº	REF. Nº