YAMAHA

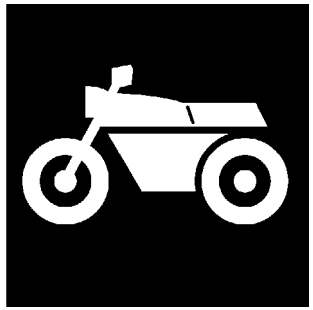

# CATALOGO DE REPUESTOS

# FZ6-NAHG (5S42) EUROPE

1G5S4-352S1

(2G5S4-352S1)

YAMAHA GENUINE Parts & Accessories

2009-01-14

| NEWS No. | DATE | COMMENT |
|---|---|---|
| PE0-MC-080074 | Dec.26, 2008 | FIG. 6 RADIATOR & HOSE ILLUSTRATION CORRECTION |

A2

FZ6-NAHG
CATALOGO DE REPUESTOS
©2007 por Yamaha Motor Co., Ltd.
1ª edición, julio 2007
Todos los derechos reservados.
Toda reproducción o uso no autorizado
sin el consentimiento escrito de
Yamaha Motor Co., Ltd.
quedan expresamente prohibidos

A3

# PROLOGO

Este catálogo de repuestos corresponde a las piezas para el o los modelos que figuran en la página de portada. Al formular el pedido de repuestos, se ruega citar este catálogo y especificar correctamente el número y el nombre de las piezas.

1. Las modificaciones y agregados que se hayan realizado después de la edición de este Catálogo de Repuestos, serán anunciados en las Informaciones de Recambios.
   Es recomendable que se hagan las correcciones necesarias en el Catálogo de Repuestos de acuerdo con las Informaciones de Recambios.

2. Abreviaciones
   En este. Catálogo de Repuestos se emplean las siguientes abreviaciones.

   "UR" Usar el número de partes especificado
   "UN" Usar la cantidad necesaria
   "AP" Piezas sustitutivas
   "LM" Fabricación local (Hay que pedir los repuestos en las cercanías)
   "F#" Nº de bastidor (Nº aplicable a la máquina)
   "O/S" Sobredimensionado

3. La cantidad de componentes para el montaje
   - Los componentes, suministrados como conjunto, se describen con un punto (.) que precede al nombre del parte como se indica a continuación.
   - La numeración que aparece a la derecha de cada descripción indica la cantidad de partes por cada unidad de conjunto.

| CODIGO Nº | DESCRIPCION | CANT. | OBSERVACIONES |
|---|---|---|---|
| 2F5–83310–60 | ENSAMBLAJE DE LA LUZ | 2 | |
| 115–83311–60 | .BOMBILLA (6V–18W) | 1 | |

4. Los colores de los componentes se indican como sigue en la columna de "OBSERVACIONES".

| CODIGO Nº | DESCRIPCION | CANT. | OBSERVACIONES |
|---|---|---|---|
| 2N4–24110–00–X5 | COMP. DEL TANQUE | 2 | MXR |
| 3J1–24240–10 | .GRAFICO, DEL TANQUE | 1 | PARA MXR |

5. Debe tenerse en cuenta que las ilustraciones sirven como guia para la búsqueda de los números de partes y no deben usarse para el montaje. Durante el montaje, se recomienda usar el manual de taller correspondiente.

6. EL asterisco (*) antes del número de referencia indica los elementos modificados después de la primera edición.

7. Números de serie

Nº de Serie del motor

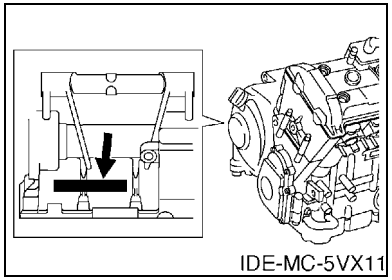


Nº de Serie del bastidor

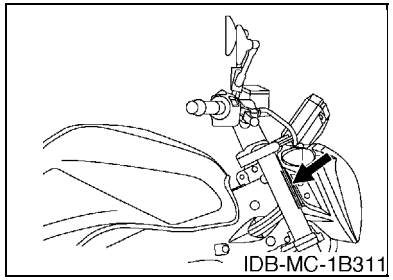


8. Códigos de color aplicables (El símbolo (*) muestra el color de modelo.)

| Abreviatura | Nombre de color | Código de color |
|---|---|---|
| BWC1(*) | BLUISH WHITE COCKTAIL 1 | 0390 |
| LGB | LOW GLOSS BLACK | 0098 |
| MBL2 | MAT BLACK 2 | 0582 |
| SM1(*) | SILVER METALLIC 1 | 0660 |
| SMX(*) | BLACK METALLIC X | 0903 |
| | | |
| | | |
| | | |
| | | |
| | | |

# ROTULO DE MODELO

(1) El rótulo llamada “Rótulo de Modelo” está en la ubicación indicada abajo en el (3). Cuando se utilice este catálogo de repuestos, se ruega cotejar entre el “código de modelo–número de código de producción” del catálogo y el “código de modelo–número de código de producción” indicado en el Rótulo de Modelo fijado en el producto correspondiente.

(2) Indicación del “Rótulo de Modelo”

| | |
|---|---|
| ○ | a b<br>xxxx – xxx |
| ● | x c |

a: Código de tipo de Modelo

b: Número de código de Producción

c: Tipo de color

| | |
|---|---|
| ○ | 4TW1–010 |
| ● | A |

(3) Ubicación de fijación del Rótulo de Modelo

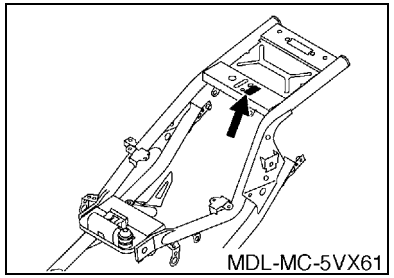


(4) Información de Color

| Código de Modelo | Código de tipo de color | Código de color | Nombre de color | Abreviatura |
|---|---|---|---|---|
| 5S42 | A | 0903 | BLACK METALLIC X | SMX |
| | B | 0660 | SILVER METALLIC 1 | SM1 |
| | C | 0390 | BLUISH WHITE COCKTAIL 1 | BWC1 |
| | | | | |
| | | | | |
| | | | | |
| | | | | |
| | | | | |
| | | | | |
| | | | | |

(5) Código de Modelo–Número de código de Producción del Modelo Listado en este Catálogo de Repuestos

| Código de Modelo | Número de Código de Producción | País (destino) |
|---|---|---|
| 5S42 | 010 | EUROPE |
| | | |
| | | |
| | |

# CONTENIDO

## MOTOR


CILINDRO ..... B2
CIGUENAL & PISTON ..... B3
VALVULA ..... B4
ARBOL DE LEVAS & CADENA ..... B6
BOMBA DE AGUA ..... B7
RADIADOR & MANGUERA ..... B8
BOMBA DE ACEITE ..... B10
FILTRO ACEITE ..... B11
ADMISION ..... B12
ADMISION 2 ..... B13
SYSTEMA DE INDUCCION DE AIRE ..... B15
DESCARGA ..... C2
CARTER ..... C4
CUBIERTA DE CARTER 1 ..... C6
ARRANQUE ..... C8
EMBRAGUE ..... C9
TRANSMISION ..... C11
LEVA DE CAMBIO & HORQUILLA ..... C13
EJE DE CAMBIO & PEDAL ..... C14


## SHASIS


CUADRO ..... D2
GUARDABARRO ..... D5
CUBIERTA LATERAL ..... D7
BRAZO TRASERO ..... D8
SUSPENSION TRASERO ..... D9
DIRECCION ..... D10
HORQUILLA DELANTERA ..... D11
DEPOSITO DE COMBUSTIBLE ..... D13
ASIENTO ..... D15
RUEDA DELANTERA ..... E2
CALIBRE FRENO DELANTERA ..... E3
RUEDA TRASERA ..... E4
CALIBRE FRENO TRASERA ..... E6
MANILLAR & CABLE ..... E7
CILINDRO MAESTRO DELANTERO ..... E8
SOPORTE & APOYAPIE ..... E10
CILINDRO MAESTRO TRASERO ..... E13
GENERADOR ..... E15
MOTOR DE ARRANQUE ..... F2
LUZ DE DESTELLADOR ..... F3
MEDIDOR ..... F4
FARO DELANTERO ..... F5
LUZ DE COLA ..... F6
INTERRUPTOR DE MANILLAR&PALANC ..... F7
EQUIPO ELECTRICO 1 ..... F8
EQUIPO ELECTRICO 2 ..... F9
EQUIPO ELECTRICO 3 ..... F11


## INDICE


INDICE NUMERICO ..... M1

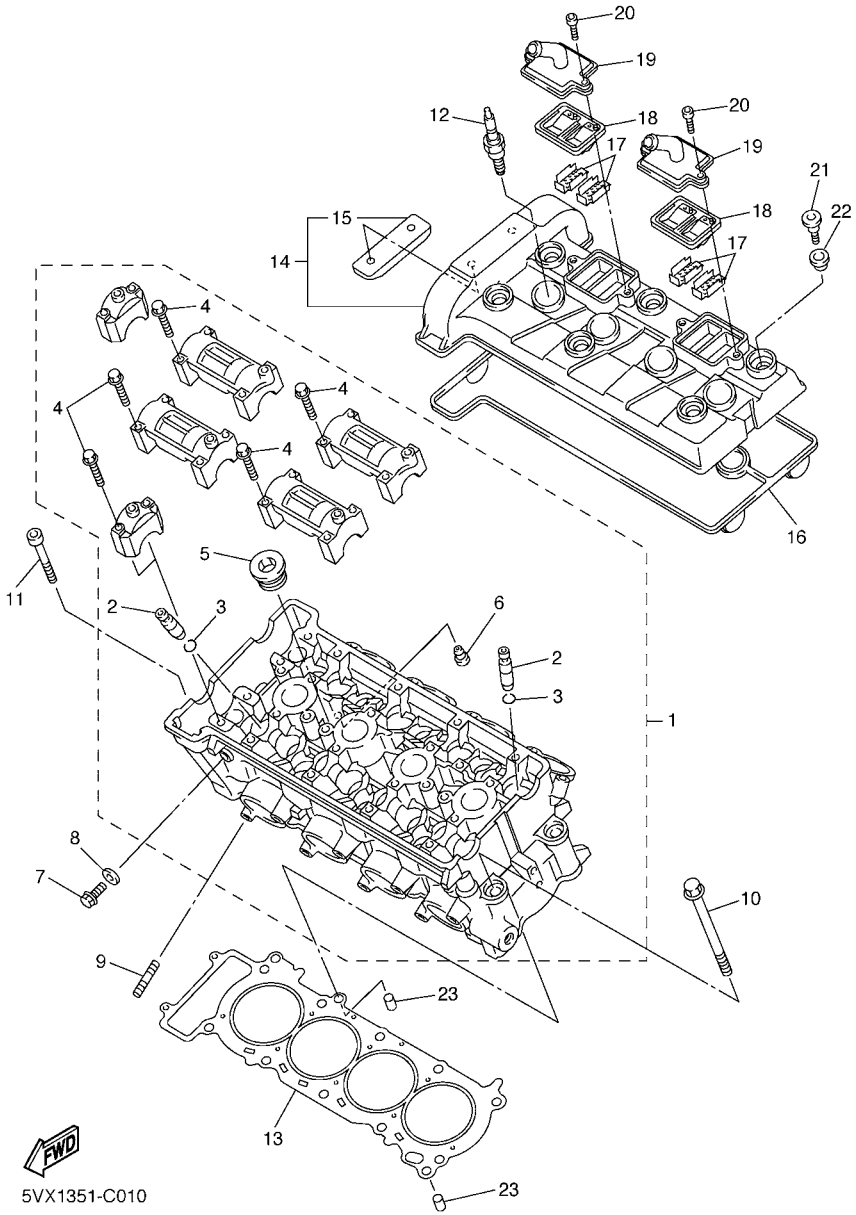


## FIG. 1 CILINDRO

| REF. Nº | CODIGO Nº | DESCRIPCION | 5S42 | | | | | OBSERVACIONES |
|---|---|---|---|---|---|---|---|---|
| 1 | 1B3–11101–00 | CULATA DE CILINDRO COMPLETA | 1 | | | | | |
| 2 | 5EB–11133–10 | .GUIA DE VALVULA 1 | 16 | | | | | |
| 3 | 93440–10153 | .SEGURO | 16 | | | | | |
| 4 | 90105–06027 | .TORNILLO | 20 | | | | | |
| 5 | 90340–20090 | .TORNILLO, DE DRENAJE | 3 | | | | | |
| 6 | 11H–15138–00 | .BOQUILLA 1 | 1 | | | | | |
| 7 | 95027–08012 | PERNO, DE BRIDA | 1 | | | | | |
| 8 | 90430–08119 | JUNTA | 1 | | | | | |
| 9 | 95617–08625 | PERNO DE PUNTAL | 8 | | | | | |
| 10 | 90119–10003 | TORNILLO CON ARANDELA | 10 | | | | | |
| 11 | 91314–06060 | PERNO | 2 | | | | | |
| 12 | 94701–00403 | BUJIA (NGK CR9EK) | 4 | | | | | |
| 13 | 5VX–11181–00 | JUNTA, DE CULATA 1 | 1 | | | | | |
| 14 | 1B3–11191–00 | TAPA CULATA DE CILINDRO 1 | 1 | | | | | |
| 15 | 5BE–12241–00 | .TOPE DE GUIA 2 | 1 | | | | | |
| 16 | 5SL–11193–00 | EMPAQUE | 1 | | | | | |
| 17 | 5SL–1482K–00 | PLACA | 4 | | | | | |
| 18 | 5SL–14890–00 | VALVULA DE LENGUETA COMPLETA | 2 | | | | | |
| 19 | 5SL–14899–00 | TAPA, DE CAJA | 2 | | | | | |
| 20 | 91317–06020 | PERNO | 4 | | | | | |
| 21 | 90109–066F0 | PERNO | 6 | | | | | |
| 22 | 4KG–1111G–00 | CASQUILLO DE GOMA | 6 | | | | | |
| 23 | 99530–10114 | PASADOR, DE ESPIGA | 2 | | | | | |

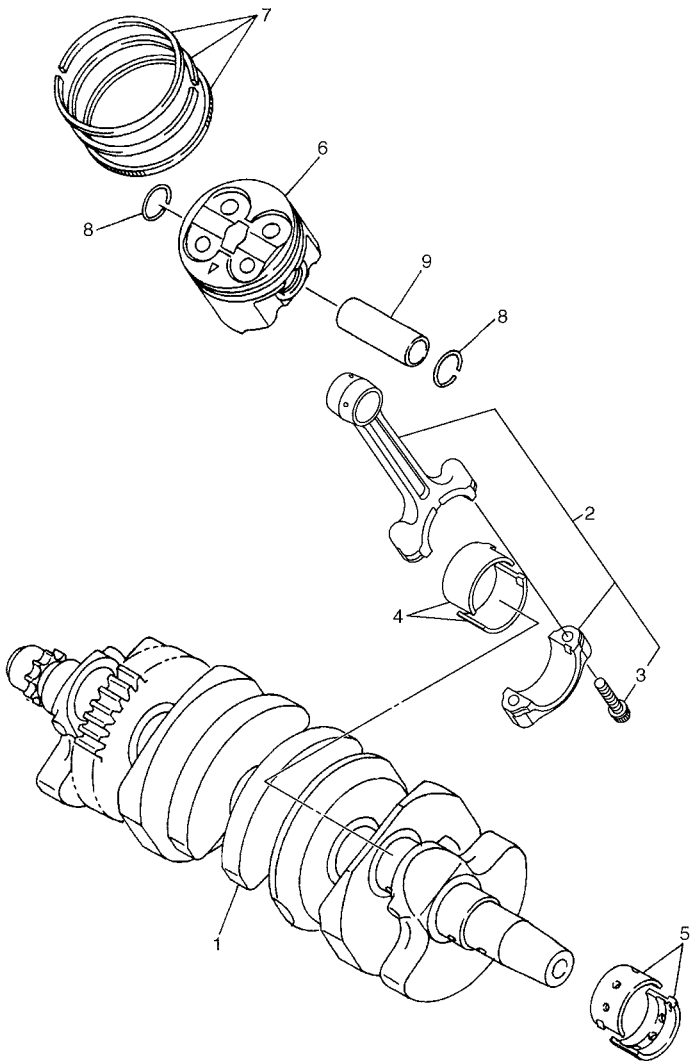

5VX6300-D020

## FIG. 2 CIGUENAL & PISTON

| REF. Nº | CODIGO Nº | DESCRIPCION | 5S42 | | | | | OBSERVACIONES |
|---|---|---|---|---|---|---|---|---|
| 1 | 5SL–11411–00 | CIGUENAL | 1 | | | | | |
| 2 | 5VX–11650–00 | BIELA COMPLETA | 4 | | | | | |
| 3 | 5VX–11654–00 | .TORNILLO DE BIELA | 2 | | | | | |
| 4 | 5VX–11656–00 | COJINETE PLANO | 8 | | | | | UR AZUL |
| | 5VX–11656–10 | COJINETE PLANO | 8 | | | | | UR NEGRO |
| | 5VX–11656–20 | COJINETE PLANO | 8 | | | | | UR MARRON |
| | 5VX–11656–30 | COJINETE PLANO | 8 | | | | | UR VERDE |
| 5 | 5EB–11416–A0 | COJINETE PLANO 1 | 10 | | | | | UR BLANCO |
| | 5EB–11416–00 | COJINETE PLANO 1 | 10 | | | | | UR AZUL |
| | 5EB–11416–10 | COJINETE PLANO 1 | 10 | | | | | UR NEGRO |
| | 5EB–11416–20 | COJINETE PLANO 1 | 10 | | | | | UR MARRON |
| | 5EB–11416–30 | COJINETE PLANO 1 | 10 | | | | | UR VERDE |
| 6 | 5SL–11631–00 | PISTON (NORMA) | 4 | | | | | |
| 7 | 5SL–11603–00 | JUEGO DE ANILLOS (NORMA) | 4 | | | | | |
| 8 | 93450–17129 | SEGURO | 8 | | | | | |
| 9 | 5EB–11633–00 | PASADOR, PISTON | 4 | | | | | |

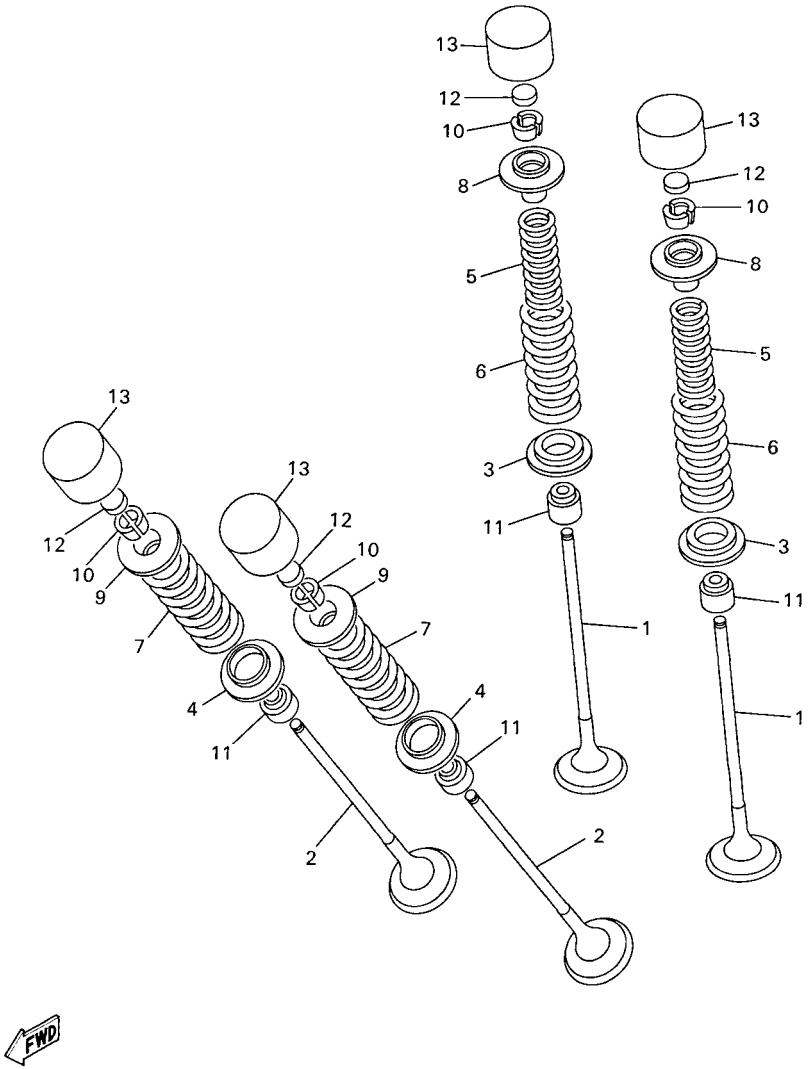


5EB3351-9030

## FIG. 3 VALVULA

| REF. Nº | CODIGO Nº | DESCRIPCION | 5S42 | | | | | OBSERVACIONES |
|---|---|---|---|---|---|---|---|---|
| 1 | 5SL–12111–10 | VALVULA DE ADMISION | 8 | | | | | |
| 2 | 5SL–12121–10 | VALVULA DE ESCAPE | 8 | | | | | |
| 3 | 5SL–12116–00 | ASIENTO RESORTE DE VALVULA | 8 | | | | | |
| 4 | 5EB–12126–00 | ASIENTO RESORTE DE VALVULA2 | 8 | | | | | |
| 5 | 5EB–12113–00 | RESORTE VALVULA INTERNA | 8 | | | | | |
| 6 | 5EB–12114–00 | RESORTE VALVULA EXTERIOR | 8 | | | | | |
| 7 | 5EB–12124–01 | RESORTE VALVULA EXTERIOR | 8 | | | | | |
| 8 | 5EB–12117–00 | RETEN RESORTE DE VALVULA | 8 | | | | | |
| 9 | 5EB–12127–00 | RETEN RESORTE DE VALVULA | 8 | | | | | |
| 10 | 1HX–12118–00 | SEGURO DE VALVULA | 32 | | | | | |
| 11 | 4TV–12119–00 | SELLO DE ACEITE VALVULA | 16 | | | | | |
| 12 | 1HX–12168–00 | COJIN, AJUSTADOR 2 (1.20) | 16 | | | | | UR |
| | 1HX–12168–20 | COJIN, AJUSTADOR 2 (1.25) | 16 | | | | | UR |
| | 1HX–12168–40 | COJIN, AJUSTADOR 2 (1.30) | 16 | | | | | UR |
| | 1HX–12168–60 | COJIN, AJUSTADOR 2 (1.35) | 16 | | | | | UR |
| | 1HX–12168–80 | COJIN, AJUSTADOR 2 (1.40) | 16 | | | | | UR |
| | 1HX–12168–A0 | COJIN, AJUSTADOR 2 (1.45) | 16 | | | | | UR |
| | 1HX–12168–F0 | COJIN, AJUSTADOR 2 (1.50) | 16 | | | | | UR |
| | 1HX–12168–H1 | COJIN, AJUSTADOR 2 (1.55) | 16 | | | | | UR |
| | 1HX–12168–K1 | COJIN, AJUSTADOR 2 (1.60) | 16 | | | | | UR |
| | 1HX–12168–M1 | COJIN, AJUSTADOR 2 (1.65) | 16 | | | | | UR |
| | 1HX–12168–R1 | COJIN, AJUSTADOR 2 (1.70) | 16 | | | | | UR |
| | 1HX–12168–U1 | COJIN, AJUSTADOR 2 (1.75) | 16 | | | | | UR |
| | 1HX–12168–W1 | COJIN, AJUSTADOR 2 (1.80) | 16 | | | | | UR |
| | 1HX–12168–Y1 | COJIN, AJUSTADOR 2 (1.85) | 16 | | | | | UR |
| | 1HX–12169–11 | COJIN, AJUSTADOR 2 (1.90) | 16 | | | | | UR |
| | 1HX–12169–31 | COJIN, AJUSTADOR 2 (1.95) | 16 | | | | | UR |

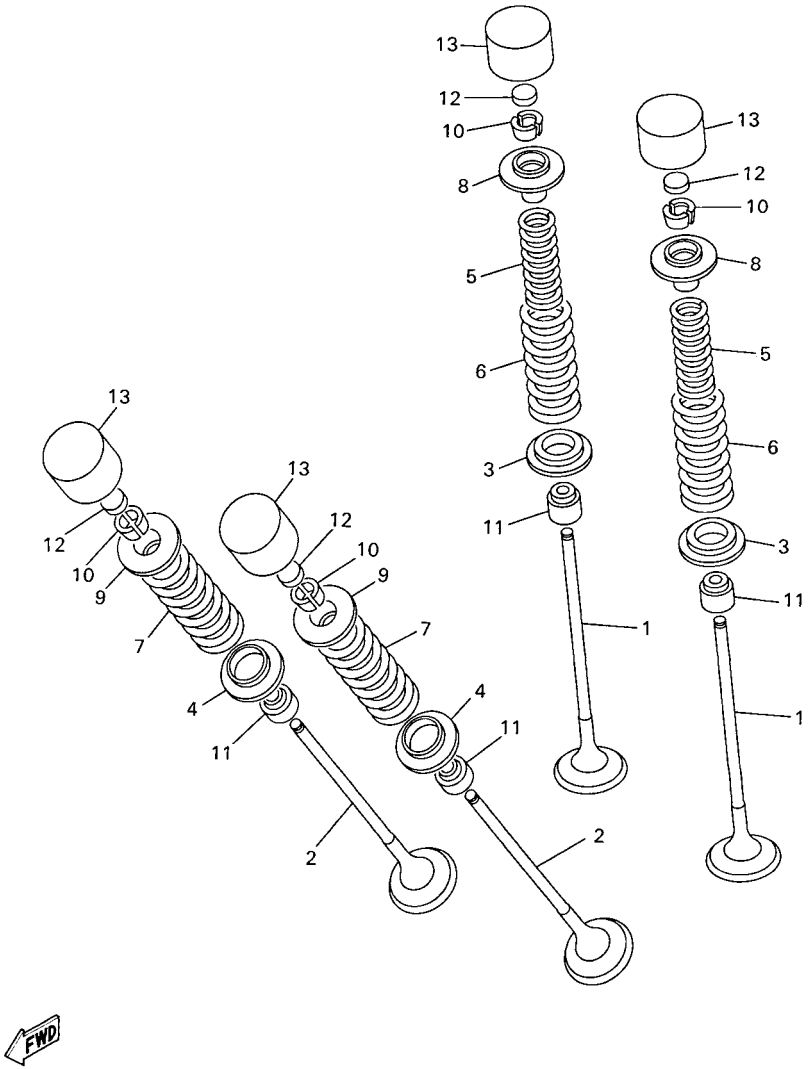


5EB3351-9030

## FIG. 3 VALVULA

| REF. Nº | CODIGO Nº | DESCRIPCION | 5S42 | | | | | OBSERVACIONES |
|---|---|---|---|---|---|---|---|---|
| 12 | 1HX–12169–50 | COJIN, AJUSTADOR 2 (2.00) | 16 | | | | | UR |
| | 1HX–12169–70 | COJIN, AJUSTADOR 2 (2.05) | 16 | | | | | UR |
| | 1HX–12169–90 | COJIN, AJUSTADOR 2 (2.10) | 16 | | | | | UR |
| | 1HX–12169–E0 | COJIN, AJUSTADOR 2 (2.15) | 16 | | | | | UR |
| | 1HX–12169–G0 | COJIN, AJUSTADOR 2 (2.20) | 16 | | | | | UR |
| | 1HX–12169–J0 | COJIN, AJUSTADOR 2 (2.25) | 16 | | | | | UR |
| | 1HX–12169–L0 | COJIN, AJUSTADOR 2 (2.30) | 16 | | | | | UR |
| | 1HX–12169–N0 | COJIN, AJUSTADOR 2 (2.35) | 16 | | | | | UR |
| | 1HX–12169–T0 | COJIN, AJUSTADOR 2 (2.40) | 16 | | | | | UR |
| 13 | 5EB–12153–20 | LEVANTADOR DE VALVULA | 16 | | | | | UR AZUL |
| | 5EB–12153–30 | LEVANTADOR DE VALVULA | 16 | | | | | UR ROJO |
| | 5EB–12153–09 | LEVANTADOR DE VALVULA (O/S) | 16 | | | | | AP VERDE |

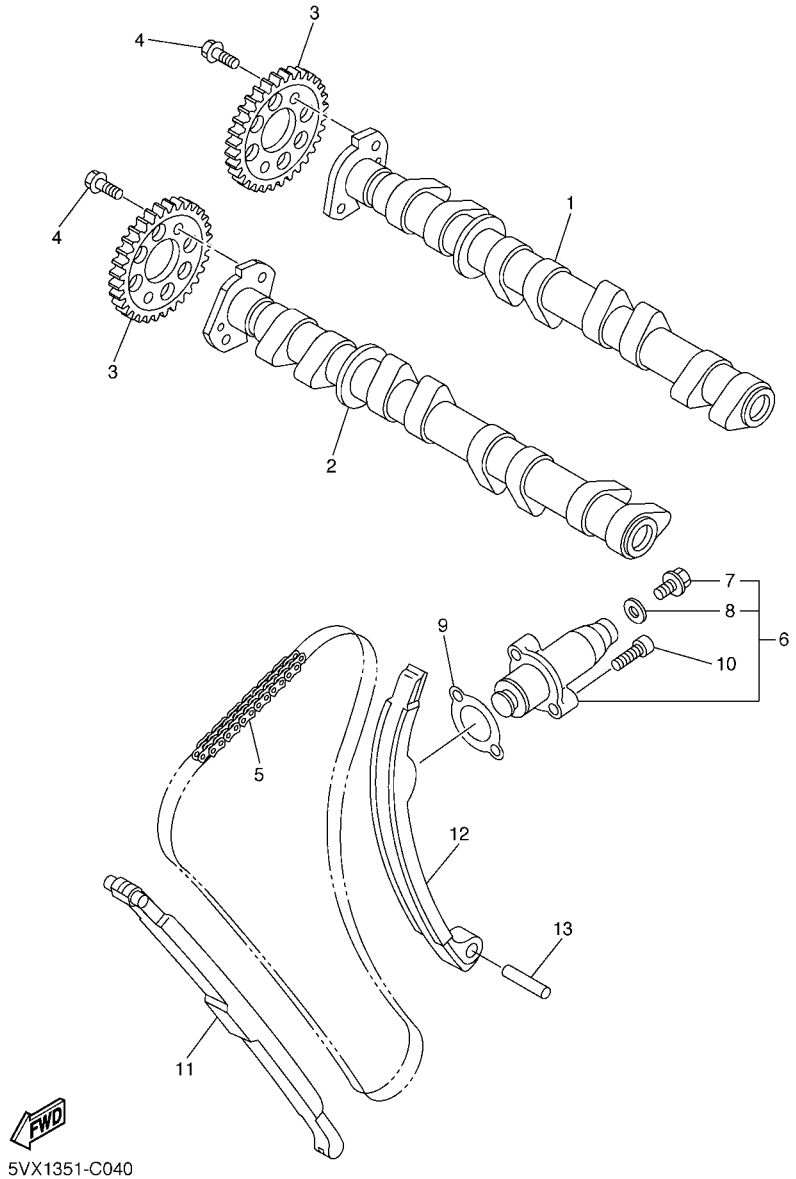


## FIG. 4 ARBOL DE LEVAS & CADENA

| REF. Nº | CODIGO Nº | DESCRIPCION | 5S42 | | | | | OBSERVACIONES |
|---|---|---|---|---|---|---|---|---|
| 1 | 5VX–12170–00 | ARBOL DE LEVAS COMPLETO 1 | 1 | | | | | |
| 2 | 5VX–12180–00 | ARBOL DE LEVAS COMPLETO 2 | 1 | | | | | |
| 3 | 5VX–12176–00 | CATALINA DE CADENA | 2 | | | | | |
| 4 | 90105–07004 | TORNILLO | 4 | | | | | |
| 5 | 94591–49120 | CADENA | 1 | | | | | |
| 6 | 5SL–12210–10 | TENSOR CADENA DE LEVA | 1 | | | | | |
| 7 | 5EL–12228–00 | .PERNO | 1 | | | | | |
| 8 | 5SL–12214–00 | .EMPAQUE | 1 | | | | | |
| 9 | 4FM–12213–00 | EMPAQUE DE CAJA TENSOR | 1 | | | | | |
| 10 | 91314–06025 | PERNO | 2 | | | | | |
| 11 | 5EB–12251–00 | AMORTIGUADOR CADENA 1 | 1 | | | | | |
| 12 | 5EB–12252–10 | AMORTIGUADOR CADENA 2 | 1 | | | | | |
| 13 | 93607–44002 | PASADOR DE CLAVIJA | 1 | | | | | |

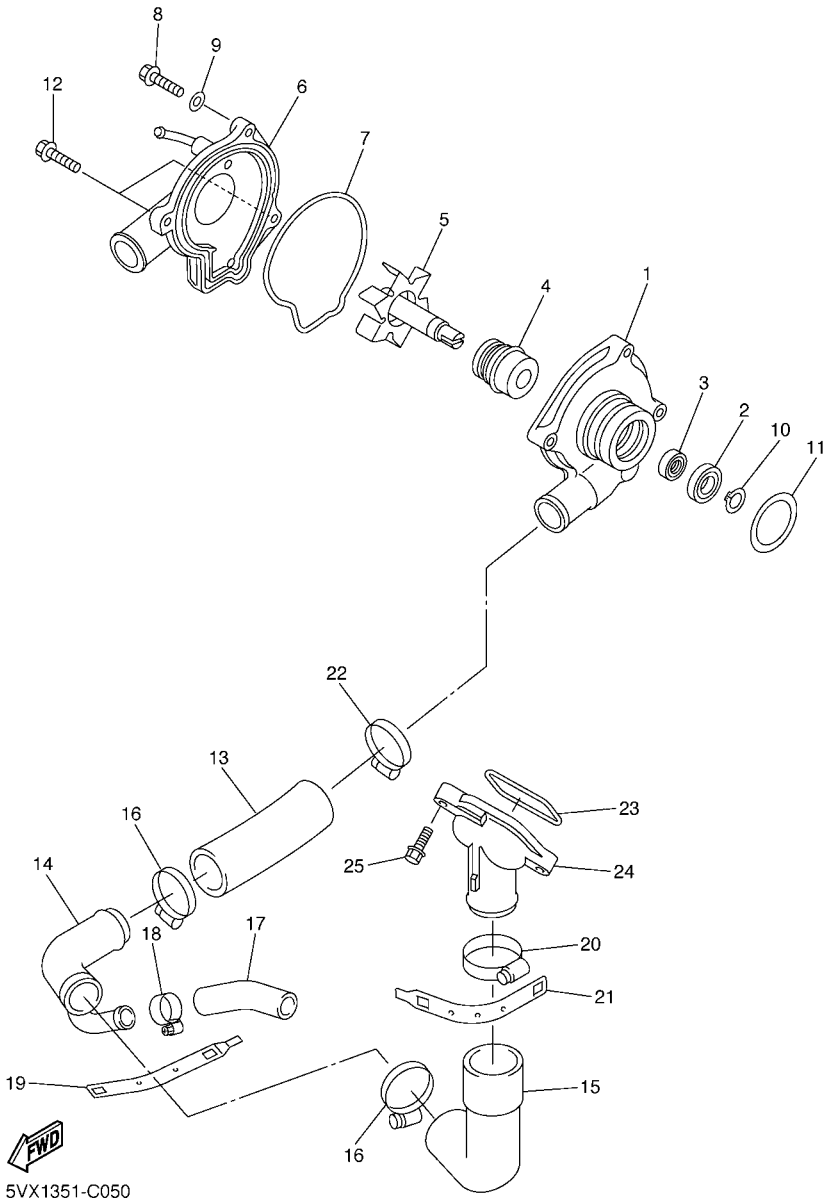


## FIG. 5 BOMBA DE AGUA

| REF. Nº | CODIGO Nº | DESCRIPCION | 5S42 | | | | | OBSERVACIONES |
|---|---|---|---|---|---|---|---|---|
| 1 | 5EB–12421–00 | CAJA DE BOMBA DE AGUA | 1 | | | | | |
| 2 | 93306–00106 | COJINETE | 1 | | | | | |
| 3 | 93101–12173 | SELLO ACEITE | 1 | | | | | |
| 4 | 11H–12438–10 | SELLO MECANICO | 1 | | | | | |
| 5 | 5EB–12450–00 | EJE IMPULSOR COMPLETO | 1 | | | | | |
| 6 | 5SL–12422–00 | CUBIERTA DE CAJA | 1 | | | | | |
| 7 | 5EB–12439–00 | ANILLO O | 1 | | | | | |
| 8 | 95024–06020 | PERNO, DE BRIDA | 2 | | | | | |
| 9 | 90430–06014 | JUNTA | 1 | | | | | |
| 10 | 99009–12400 | PRESILLA REDONDA | 1 | | | | | |
| 11 | 93210–33133 | ANILLO O | 1 | | | | | |
| 12 | 90110–06086 | TORNILLO ALLEN | 2 | | | | | |
| 13 | 4NK–12579–00 | MANGUERA 4 | 1 | | | | | |
| 14 | 5VX–12581–00 | CONEXION | 1 | | | | | |
| 15 | 5EB–12577–01 | MANGUERA 2 | 1 | | | | | |
| 16 | 90450–35001 | BRIDA, MANGUERA | 2 | | | | | |
| 17 | 5SL–12588–01 | MANGUERA 5 | 1 | | | | | |
| 18 | 90450–22017 | BRIDA, MANGUERA | 1 | | | | | |
| 19 | 5GV–1246E–00 | CUBIERTA 2 | 1 | | | | | |
| 20 | 90450–38040 | BRIDA, MANGUERA | 1 | | | | | |
| 21 | 5GV–1246A–00 | CUBIERTA 1 | 1 | | | | | |
| 22 | 90450–32001 | BRIDA, MANGUERA | 1 | | | | | |
| 23 | 93210–46001 | ANILLO O | 1 | | | | | |
| 24 | 5EB–12469–00 | CONDUCTO | 1 | | | | | |
| 25 | 90105–06053 | TORNILLO | 2 | | | | | |

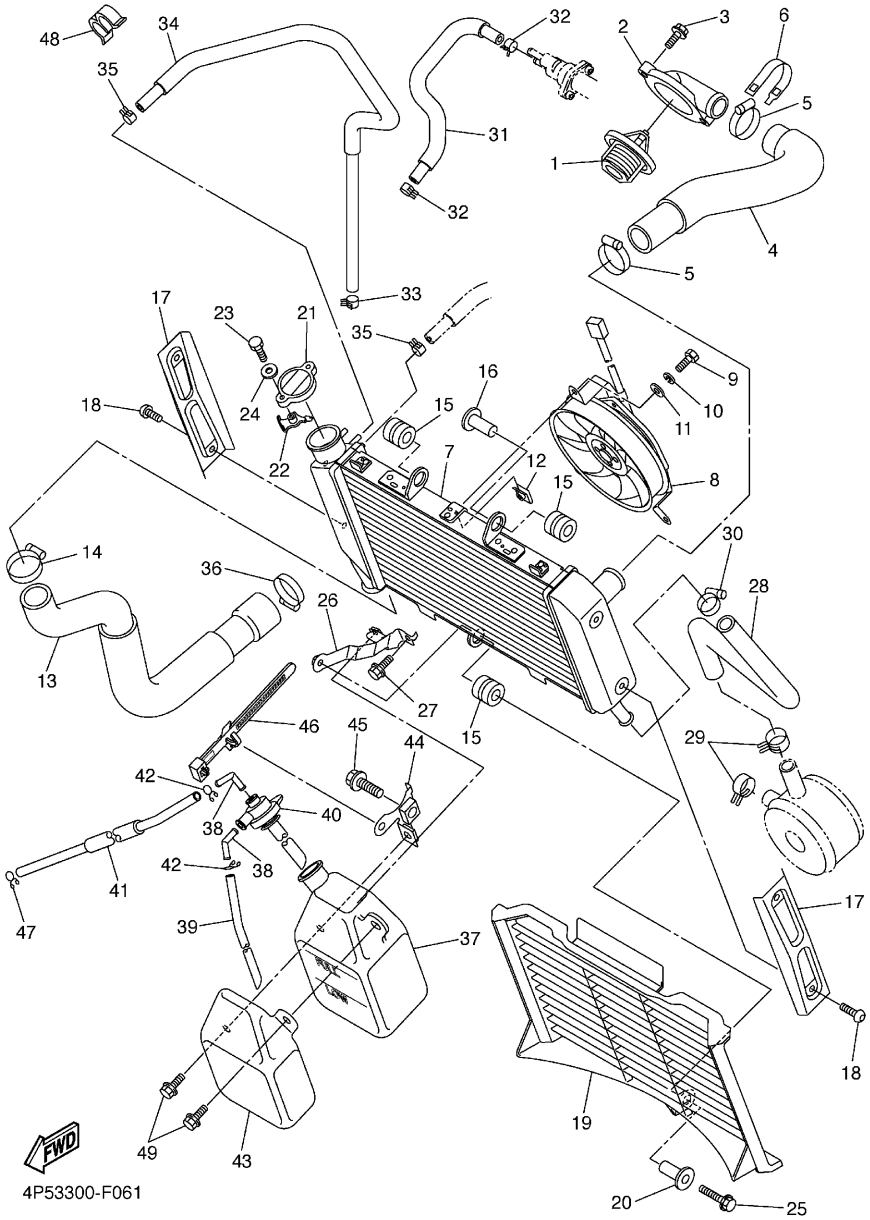


## FIG. 6 RADIADOR & MANGUERA

| REF. Nº | CODIGO Nº | DESCRIPCION | 5S42 | | | | | OBSERVACIONES |
|---|---|---|---|---|---|---|---|---|
| 1 | 5SL–12410–00 | TERMOSTATO CONJUNTO | 1 | | | | | |
| 2 | 5VX–12413–00 | CUBIERTA TERMOSTATO | 1 | | | | | |
| 3 | 90105–06557 | TORNILLO | 2 | | | | | |
| 4 | 4S8–12578–00 | MANGUERA 3 | 1 | | | | | |
| 5 | 90450–35001 | BRIDA, MANGUERA | 2 | | | | | |
| 6 | 5GV–1246E–00 | CUBIERTA 2 | 1 | | | | | |
| 7 | 4S8–12461–00 | RADIADOR COMPLETO | 1 | | | | | |
| 8 | 4S8–12405–00 | COMPRESOR | 1 | | | | | |
| 9 | 97307–06012 | PERNO | 3 | | | | | |
| 10 | 92907–06100 | ARANDELA | 3 | | | | | |
| 11 | 92907–06600 | ARANDELA | 3 | | | | | |
| 12 | 1AA–12535–00 | EMPAQUETADURA | 3 | | | | | |
| 13 | 4S8–12579–00 | MANGUERA 4 | 1 | | | | | |
| 14 | 90450–32003 | BRIDA, MANGUERA | 1 | | | | | |
| 15 | 90480–15363 | TAPON | 3 | | | | | |
| 16 | 90387–0614M | ESPACIADOR | 1 | | | | | |
| 17 | 5VX–1240J–10 | CUBIERTA DE RADIADOR COMPLETO | 2 | | | | | |
| 18 | 90111–06031 | TORNILLO | 4 | | | | | |
| 19 | 4S8–12467–00 | CUBIERTA DEL RADIADOR | 1 | | | | | |
| 20 | 90387–066H4 | ESPACIADOR | 1 | | | | | |
| 21 | 1B3–12462–00 | TAPON, DEL RADIADOR | 1 | | | | | |
| 22 | 5FC–12437–00 | TOPE | 1 | | | | | |
| 23 | 97004–05012 | PERNO | 1 | | | | | |
| 24 | 92904–05600 | ARANDELA | 1 | | | | | |
| 25 | 95824–06030 | TORNILLO | 1 | | | | | |
| 26 | 4S8–1244E–00 | SOPORTE 1 | 1 | | | | | |
| 27 | 95824–06012 | TORNILLO | 1 | | | | | |

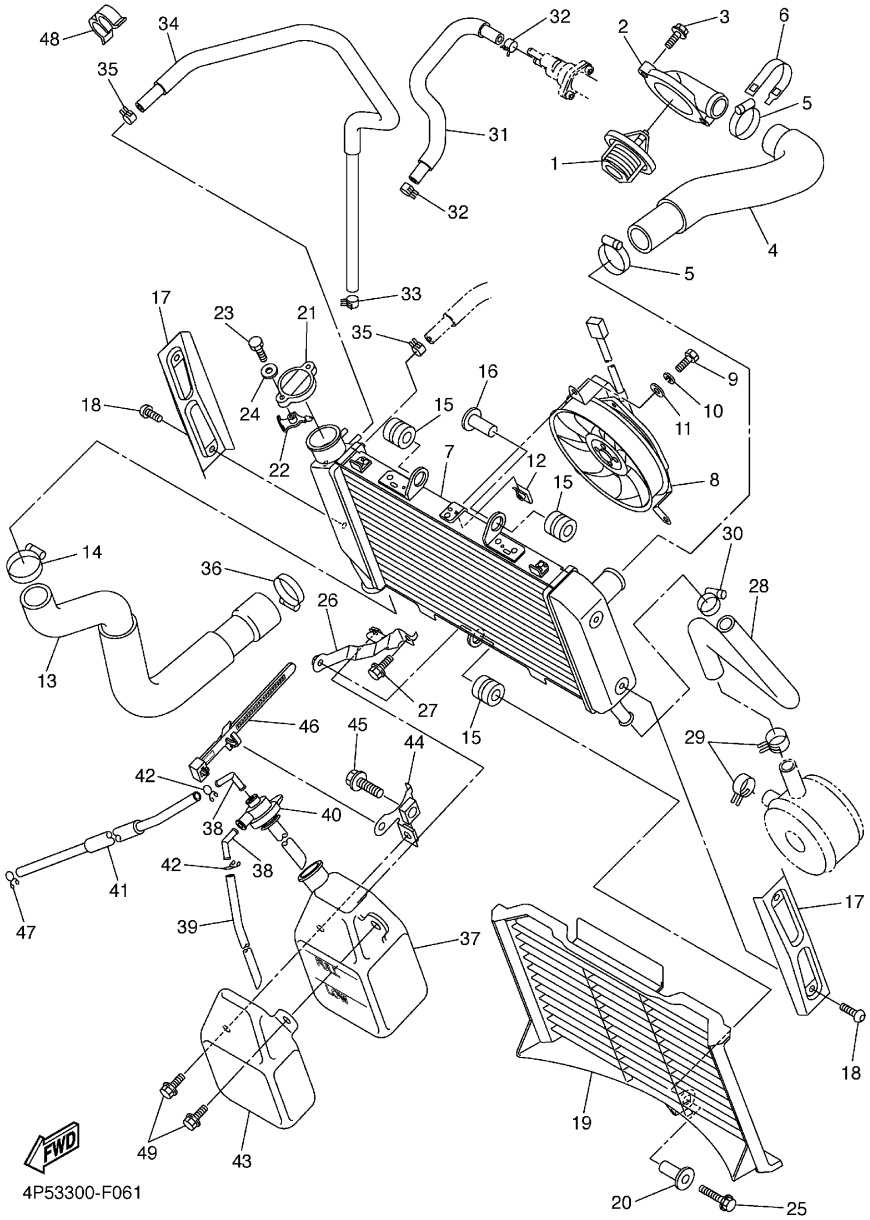


## FIG. 6 RADIADOR & MANGUERA

| REF. Nº | CODIGO Nº | DESCRIPCION | 5S42 | | | | | OBSERVACIONES |
|---|---|---|---|---|---|---|---|---|
| 28 | 4S8–12589–00 | MANGUERA 6 | 1 | | | | | |
| 29 | 90467–200A0 | PRESILLA | 2 | | | | | |
| 30 | 90450–22017 | BRIDA, MANGUERA | 1 | | | | | |
| 31 | 5VX–1243A–00 | TUBO 1 | 1 | | | | | |
| 32 | 90467–11090 | PRESILLA | 2 | | | | | |
| 33 | 90467–11090 | PRESILLA | 1 | | | | | |
| 34 | 5VX–1244G–00 | MANGUERA 4 | 1 | | | | | |
| 35 | 90467–11090 | PRESILLA | 2 | | | | | |
| 36 | 90450–32001 | BRIDA, MANGUERA | 1 | | | | | |
| 37 | 4P5–21871–00 | TANQUE DE RECUPERACION | 1 | | | | | |
| 38 | 26H–21828–00 | CODO | 2 | | | | | |
| 39 | 90445–081F2 | TUBO (L200) | 1 | | | | | |
| 40 | 3P6–21875–00 | TAPA | 1 | | | | | |
| 41 | 90445–08025 | TUBO | 1 | | | | | |
| 42 | 90467–08075 | PRESILLA | 2 | | | | | |
| 43 | 4P5–2172W–00 | CUBIERTA | 1 | | | | | |
| 44 | 4P5–21873–00 | SOPORTE TANQUE RECUPERACION | 1 | | | | | |
| 45 | 95024–10020 | PERNO, DE BRIDA | 1 | | | | | |
| 46 | 90464–07012 | BRIDA | 1 | | | | | |
| 47 | 90467–08075 | PRESILLA | 1 | | | | | |
| 48 | 90464–12238 | BRIDA | 1 | | | | | |
| 49 | 90105–060A6 | TORNILLO | 2 | | | | | |

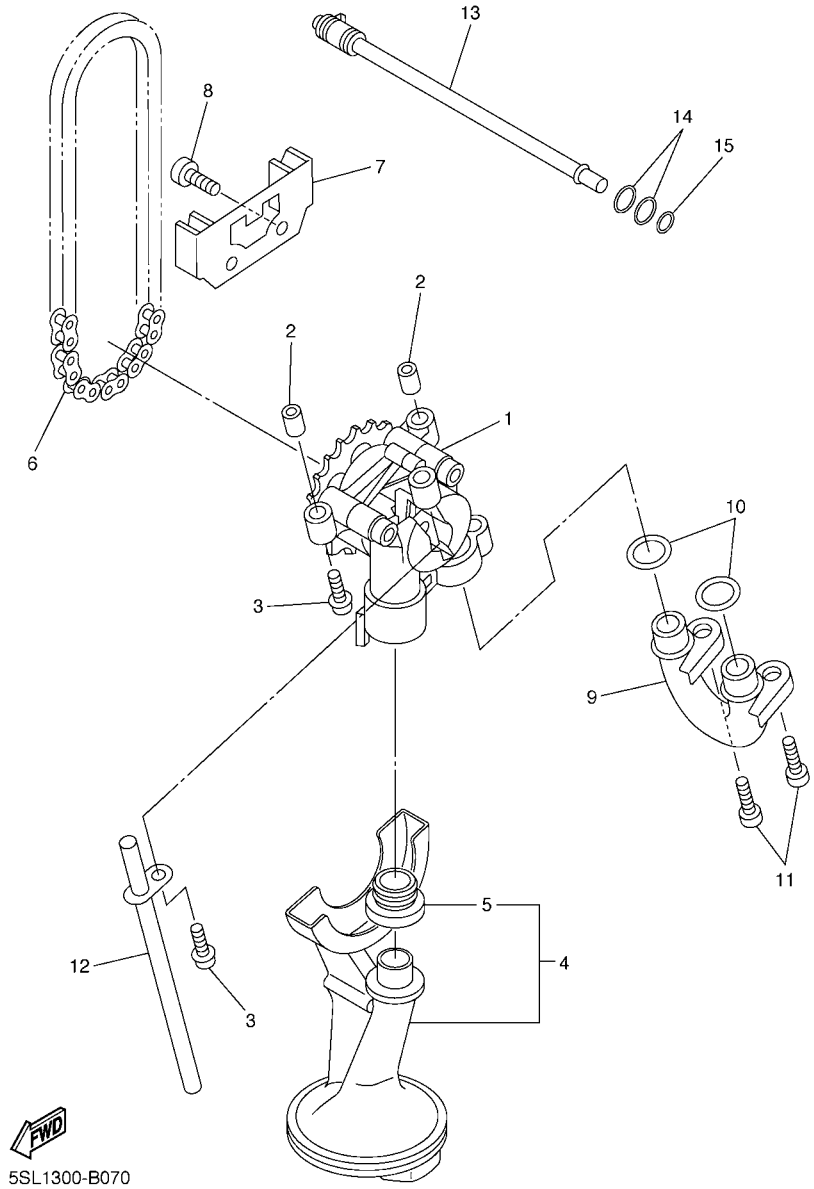


## FIG. 7 BOMBA DE ACEITE

| REF. Nº | CODIGO Nº | DESCRIPCION | 5S42 | | | | | OBSERVACIONES |
|---|---|---|---|---|---|---|---|---|
| 1 | 5MT–13300–00 | BOMBA DE ACEITE COMPLETA | 1 | | | | | |
| 2 | 91808–17032 | PASADOR DE CLAVIJA | 2 | | | | | |
| 3 | 90109–06031 | PERNO | 3 | | | | | |
| 4 | 5SL–13410–00 | CAJA DE FILTRO COMPLETA | 1 | | | | | |
| 5 | 5EB–13415–00 | .SELLO COLADOR ACEITE | 1 | | | | | |
| 6 | 94580–25080 | CADENA | 1 | | | | | |
| 7 | 5EB–13898–00 | SOSTEN | 1 | | | | | |
| 8 | 90110–06161 | TORNILLO ALLEN | 2 | | | | | |
| 9 | 2C0–13416–00 | TUBO DE ACEITE 1 | 1 | | | | | |
| 10 | 93210–14003 | ANILLO O | 2 | | | | | |
| 11 | 90110–06161 | TORNILLO ALLEN | 2 | | | | | |
| 12 | 5EB–13161–00 | TUBO CONDUCTOR 1 | 1 | | | | | |
| 13 | 5EB–1316E–00 | TUBO, DE ENTREGA 5 | 1 | | | | | |
| 14 | 93210–09165 | ANILLO O | 2 | | | | | |
| 15 | 93210–06667 | ANILLO O | 1 | | | | | |

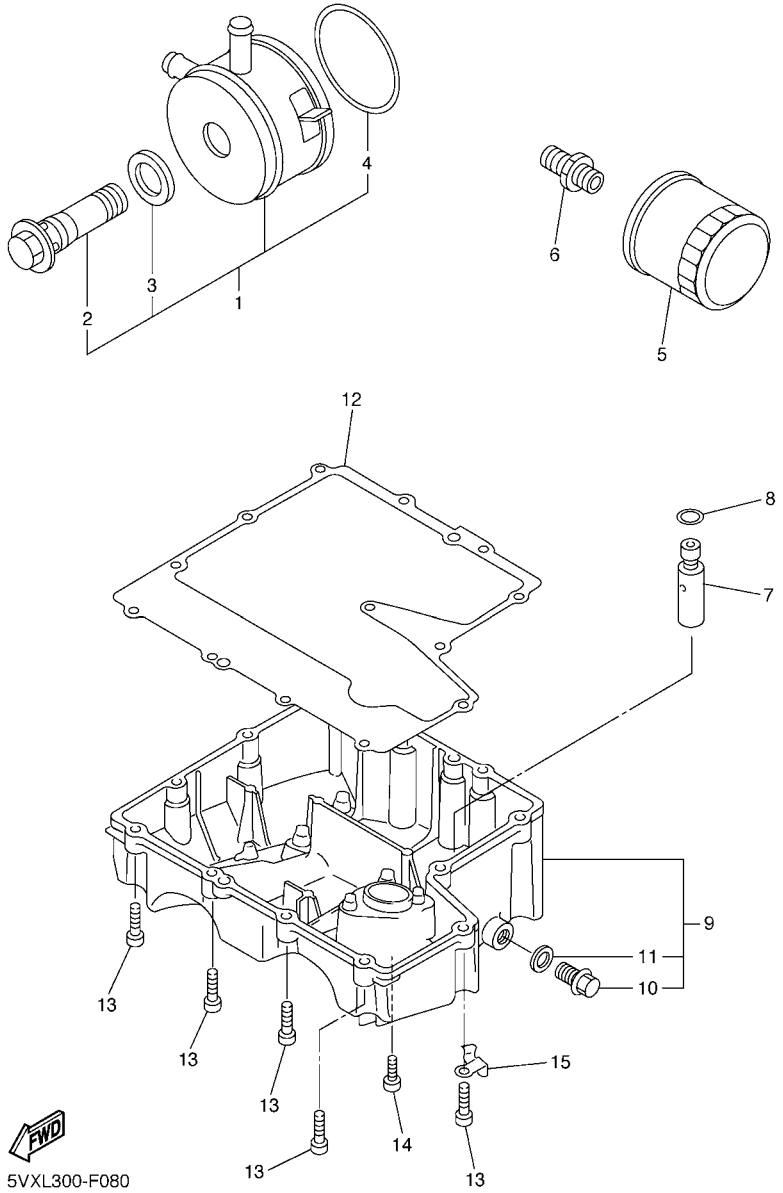


## FIG. 8 FILTRO ACEITE

| REF. Nº | CODIGO Nº | DESCRIPCION | 5S42 | | | | | OBSERVACIONES |
|---|---|---|---|---|---|---|---|---|
| 1 | 5EB–13470–00 | ENFRIADOR DE ACEITE COMPLETO | 1 | | | | | |
| 2 | 5EB–12822–00 | .PERNO DE UNION | 1 | | | | | |
| 3 | 5EB–13475–00 | .EMPAQUE | 1 | | | | | |
| 4 | 5JW–13473–00 | .ANILLO O | 1 | | | | | |
| 5 | 5GH–13440–20 | ELEMENTO FILTRO DE ACEITE | 1 | | | | | |
| 6 | 90401–20145 | PERNO DE UNION | 1 | | | | | |
| 7 | 3KS–13490–00 | VALVELA DE DESCOMPRESION | 1 | | | | | |
| 8 | 93210–15566 | ANILLO O | 1 | | | | | |
| 9 | 4S8–13417–00 | TAPA DE FILTRO | 1 | | | | | |
| 10 | 90340–14132 | .TORNILLO, DE DRENAJE | 1 | | | | | |
| 11 | 214–11198–01 | .EMPAQUE | 1 | | | | | |
| 12 | 5VX–13414–01 | EMPAQUE DE TAPA FILTRO | 1 | | | | | |
| 13 | 91312–06025 | TORNILLO | 12 | | | | | |
| 14 | 90110–06169 | TORNILLO ALLEN | 1 | | | | | |
| 15 | 90465–10030 | BRIDA | 1 | | | | | |

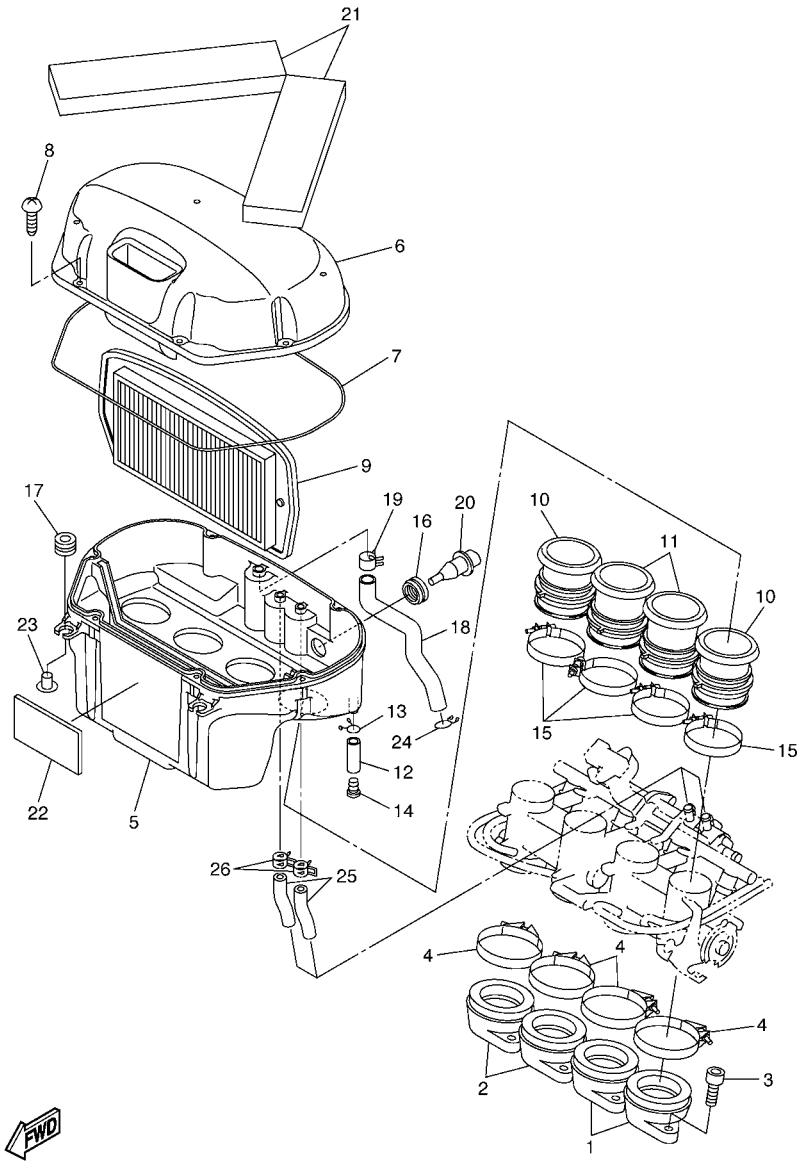


5VX3100-C090

## FIG. 9 ADMISION

| REF. Nº | CODIGO Nº | DESCRIPCION | 5S42 | | | | | OBSERVACIONES |
|---|---|---|---|---|---|---|---|---|
| 1 | 5SL–13586–01 | TOBERA DE CARBURADOR 1 | 2 | | | | | |
| 2 | 5SL–13596–01 | TOBERA DE CARBURADOR 2 | 2 | | | | | |
| 3 | 91317–06020 | PERNO | 8 | | | | | |
| 4 | 90450–63003 | BRIDA, MANGUERA | 4 | | | | | |
| 5 | 5VX–14411–00 | CAJA FILTRO DEL AIRE 1 | 1 | | | | | |
| 6 | 5VX–14421–00 | CAJA FILTRO DEL AIRE 2 | 1 | | | | | |
| 7 | 5VX–14452–00 | SELLO | 1 | | | | | |
| 8 | 97707–50025 | TORNILLO ROSCA HEMBRA | 6 | | | | | |
| 9 | 5VX–14451–00 | ELEMENTO DEL FILTRO DEL AIRE | 1 | | | | | |
| 10 | 5VX–14453–00 | UNION DEL FILTRO DEL AIRE 1 | 2 | | | | | |
| 11 | 5VX–14463–00 | UNION DE FILTRO DE AIRE 2 | 2 | | | | | |
| 12 | 90445–11795 | TUBO (L30) | 1 | | | | | |
| 13 | 90467–10041 | PRESILLA | 1 | | | | | |
| 14 | 90338–08174 | TAPON | 1 | | | | | |
| 15 | 90450–53002 | BRIDA, MANGUERA | 4 | | | | | |
| 16 | 5CA–14435–00 | ANILLO PROTECTOR | 1 | | | | | |
| 17 | 90480–12314 | TAPON | 2 | | | | | |
| 18 | 5VX–15373–00 | MANGUELA DE RESPIRADERO | 1 | | | | | |
| 19 | 90467–15054 | PRESILLA | 1 | | | | | |
| 20 | 5CA–85886–00 | SENSOR | 1 | | | | | |
| 21 | 5VX–14409–00 | AMORTIGUADOR | 2 | | | | | |
| 22 | 5EJ–2414H–00 | EQUILIBRIO, CUBIERTA | 1 | | | | | |
| 23 | 90387–06073 | ESPACIADOR | 2 | | | | | |
| 24 | 90467–14015 | PRESILLA | 1 | | | | | |
| 25 | 5VX–14148–01 | TUBO | 2 | | | | | |
| 26 | 90467–17089 | PRESILLA | 2 | | | | | |

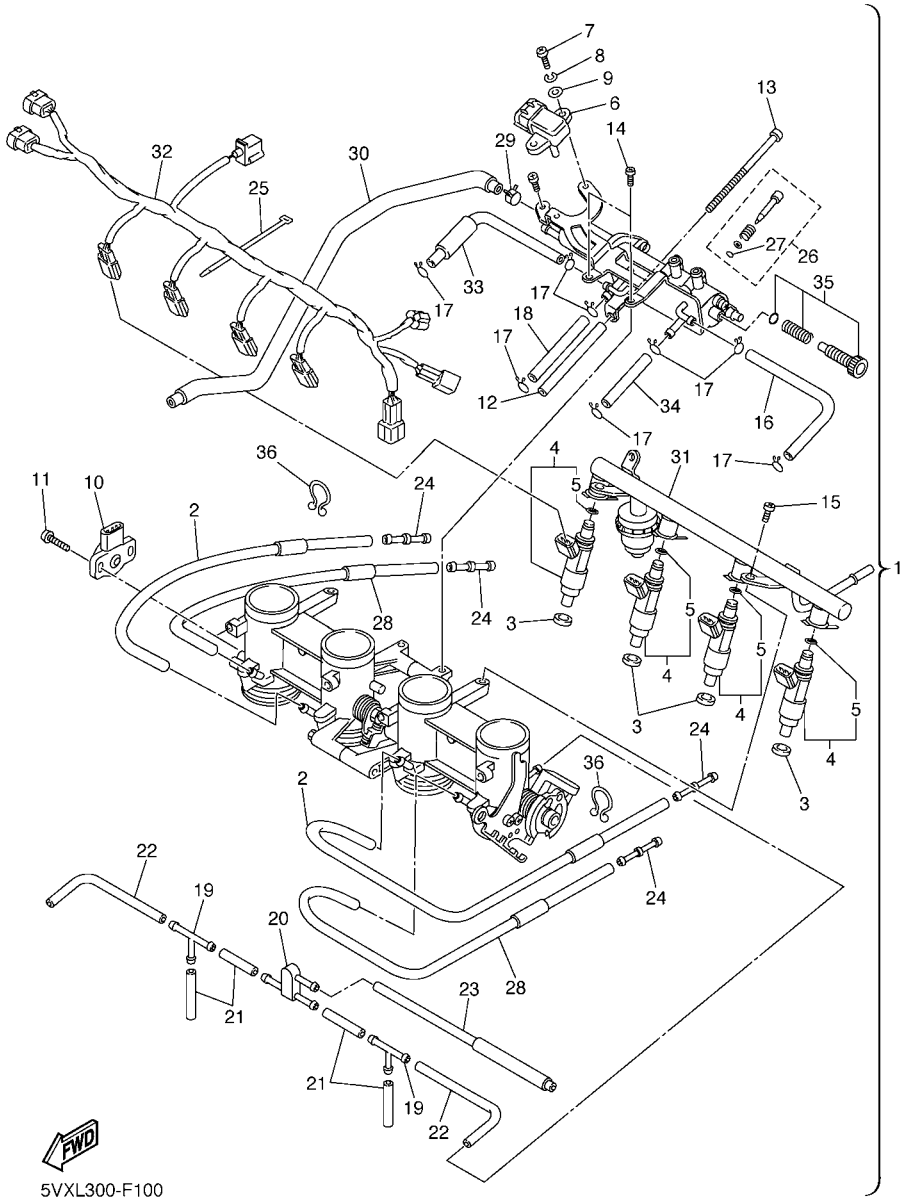


## FIG. 10 ADMISION 2

| REF. Nº | CODIGO Nº | DESCRIPCION | 5S42 | | | | | OBSERVACIONES |
|---|---|---|---|---|---|---|---|---|
| 1 | 5VX–13750–04 | CAJA DE ACELERADOR COMPL. | 1 | | | | | |
| 2 | 5VX–14348–00 | .MANGUERA | 2 | | | | | |
| 3 | 90430–09002 | .JUNTA | 4 | | | | | |
| 4 | 5VX–13761–00 | .INYECTOR | 4 | | | | | |
| 5 | 5PS–14147–00 | ..ANILLO O | 1 | | | | | |
| 6 | 5VX–82380–00 | .SENSOR DE PRESION | 1 | | | | | |
| 7 | 98507–05016 | .TORNILLO DE CABEZA PLANA | 2 | | | | | |
| 8 | 92907–05100 | .ARANDELA | 2 | | | | | |
| 9 | 92907–05600 | .ARANDELA | 2 | | | | | |
| 10 | 2D1–85885–00 | .TERMICA SENSORIO | 1 | | | | | |
| 11 | 8CC–14216–10 | .TORNILLO | 2 | | | | | |
| 12 | 5VX–14149–00 | .TUBO | 1 | | | | | |
| 13 | 5VX–14565–00 | .TORNILLO | 1 | | | | | |
| 14 | 98507–05010 | .TORNILLO DE CABEZA CON PLANA | 2 | | | | | |
| 15 | 98507–06012 | .TORNILLO DE CABEZA PLANA | 2 | | | | | |
| 16 | 5VX–14396–00 | .TUBO | 1 | | | | | |
| 17 | 3UH–14937–00 | .PRESILLA | 8 | | | | | |
| 18 | 5VX–14987–00 | .TUBO | 1 | | | | | |
| 19 | 68V–24376–00 | .TUBO DE UNION 1 | 2 | | | | | |
| 20 | 3XV–14251–00 | .NIPLE | 1 | | | | | |
| 21 | 5FL–14348–10 | .MANGUERA | 4 | | | | | |
| 22 | 68V–13533–00 | .MANGUERA, DE VACIO 4 | 2 | | | | | |
| 23 | 5VX–1410E–00 | .TUBO | 1 | | | | | |
| 24 | 5PW–14251–00 | .NIPLE | 4 | | | | | |
| 25 | 4KM–14137–00 | .PRESILLA | 1 | | | | | |
| 26 | 5JW–14104–00 | .CJTO. TORNNILLO DE AIRE | 4 | | | | | |
| 27 | 3H1–14147–00 | ..ANILLO O | 1 | | | | | |

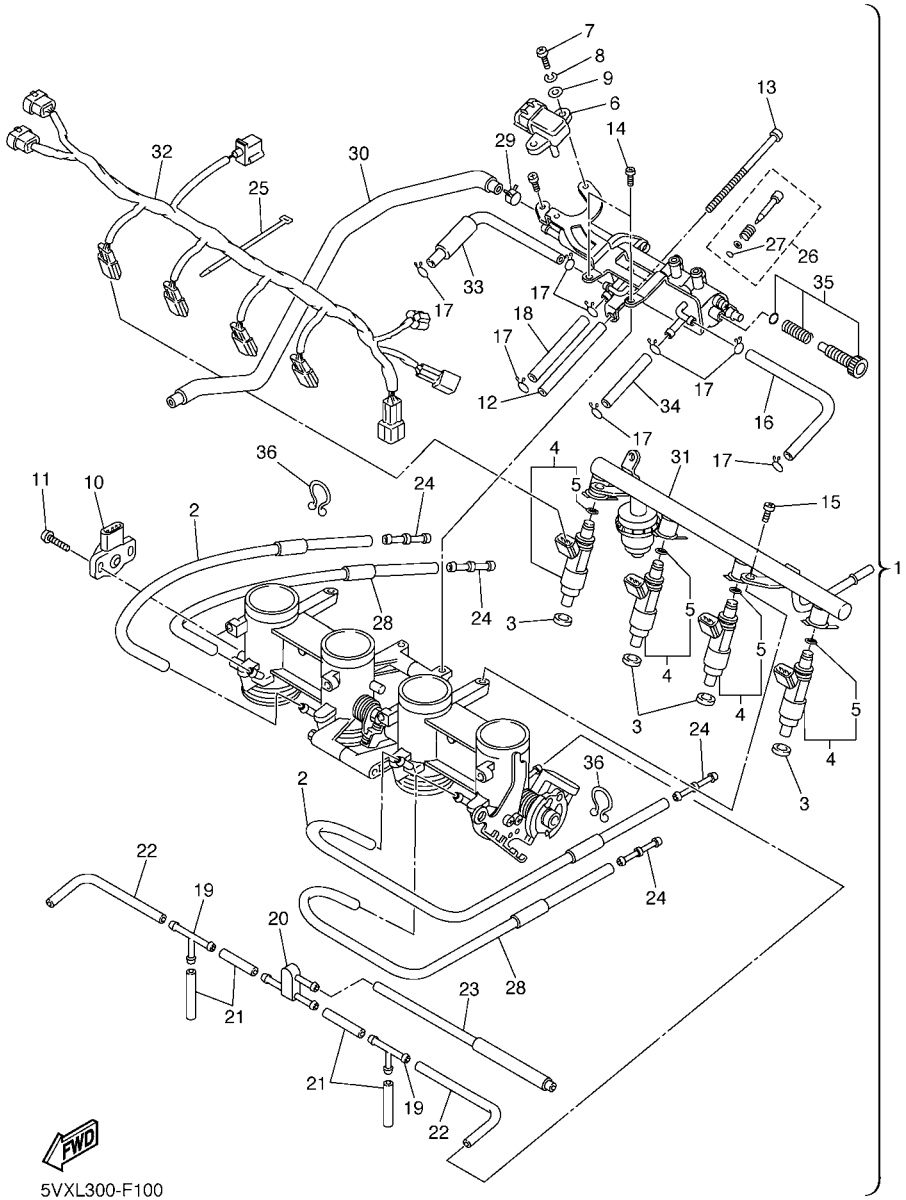


## FIG. 10 ADMISION 2

| REF. Nº | CODIGO Nº | DESCRIPCION | 5S42 | | | | | OBSERVACIONES |
|---|---|---|---|---|---|---|---|---|
| 28 | 5VX–14349–00 | .TUBO | 2 | | | | | |
| 29 | 90467–11090 | .PRESILLA | 1 | | | | | |
| 30 | 5VX–1243E–00 | .TUBO 2 | 1 | | | | | |
| 31 | 5VX–13160–00 | .TUBO DE LLEGADA CONJUNTO 1 | 1 | | | | | |
| 32 | 5VX–82386–00 | .EXTENSION, ARNES DE CABLES | 1 | | | | | |
| 33 | 5VX–13533–00 | .MANGUERA, DE VACIO 4 | 1 | | | | | |
| 34 | 5VX–14807–00 | .TUBO | 1 | | | | | |
| 35 | 5VX–14503–00 | .CARBURADOR COMPL. | 1 | | | | | |
| 36 | 90464–23041 | .BRIDA | 2 | | | | | |

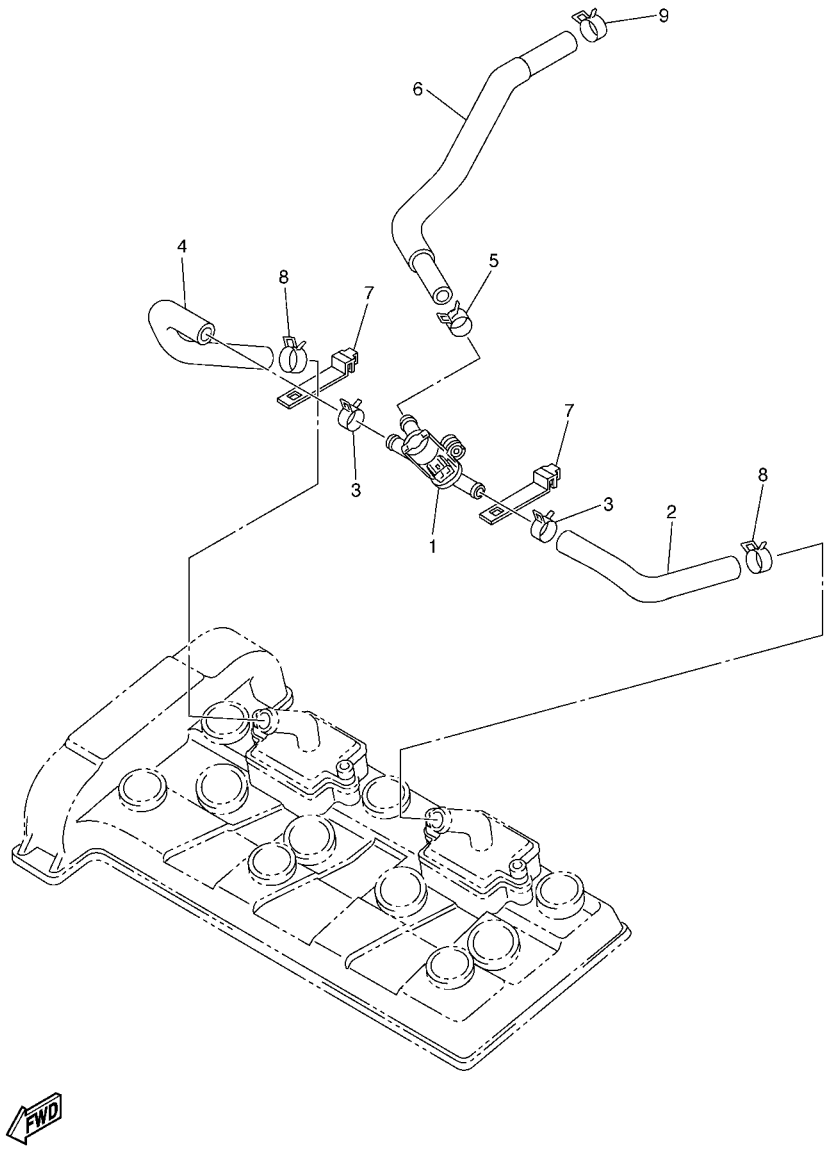


## FIG. 11 SYSTEMA DE INDUCCION DE AIRE

| REF. Nº | CODIGO Nº | DESCRIPCION | 5S42 | | | | | OBSERVACIONES |
|---|---|---|---|---|---|---|---|---|
| 1 | 5VX–14840–00 | VALVULA, CORTE DE AIRE | 1 | | | | | |
| 2 | 5VX–14881–00 | TUBO 1 | 1 | | | | | |
| 3 | 90467–17089 | PRESILLA | 2 | | | | | |
| 4 | 5VX–14882–00 | TUBO 2 | 1 | | | | | |
| 5 | 90467–17089 | PRESILLA | 1 | | | | | |
| 6 | 5VX–14883–00 | TUBO 3 | 1 | | | | | |
| 7 | 5JW–14723–00 | CUBIERTA | 2 | | | | | |
| 8 | 90467–17003 | PRESILLA | 2 | | | | | |
| 9 | 90467–17128 | PRESILLA | 1 | | | | | |

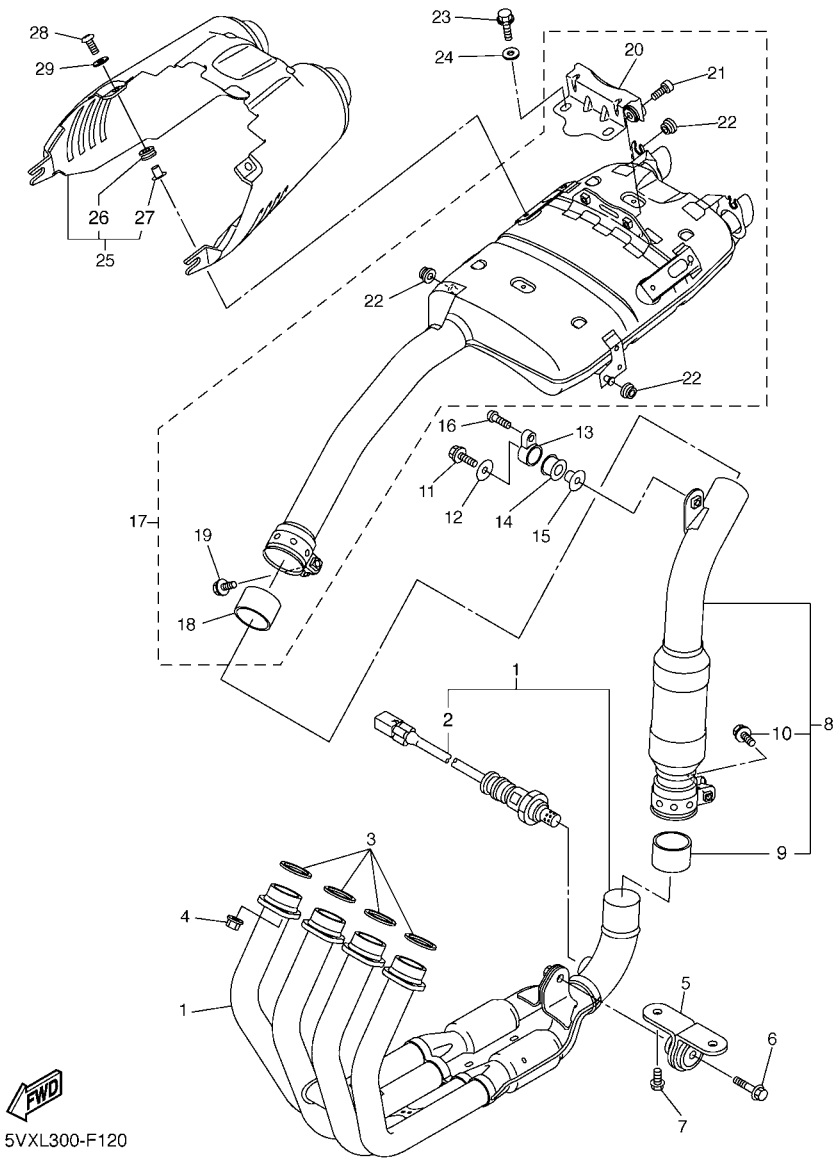


## FIG. 12 DESCARGA

| REF. Nº | CODIGO Nº | DESCRIPCION | 5S42 | | | | | OBSERVACIONES |
|---|---|---|---|---|---|---|---|---|
| 1 | 4S8–14610–00 | TUBO DE ESCAPE COMPLETO 1 | 1 | | | | | |
| 2 | 2D1–8592A–00 | .SENSOR | 1 | | | | | |
| 3 | 3YF–14613–01 | JUNTA, TUBO DE ESCAPE | 4 | | | | | |
| 4 | 90179–08410 | TUERCA | 8 | | | | | |
| 5 | 4S8–21445–00 | SOPORTE DE SILENCIADOR 1 | 1 | | | | | |
| 6 | 90105–08063 | TORNILLO | 1 | | | | | |
| 7 | 90105–08021 | TORNILLO | 2 | | | | | |
| 8 | 4S8–14740–00 | ASAMBLEA DEL CATALIZADOR | 1 | | | | | |
| 9 | 5VY–14714–00 | .EMPAQUE DE SILENCIADOR | 1 | | | | | |
| 10 | 95814–08045 | .TORNILLO | 1 | | | | | |
| 11 | 95812–08035 | TORNILLO DE REBORDE | 1 | | | | | |
| 12 | 90201–08034 | ARANDELA PLANA | 1 | | | | | |
| 13 | 5VX–21446–10 | SOPORTE DE SILENCIADOR 2 | 1 | | | | | |
| 14 | 4XV–27424–00 | AMORTIGUADOR DE SILENCIADOR | 1 | | | | | |
| 15 | 90387–082W9 | ESPACIADOR | 1 | | | | | |
| 16 | 92014–08045 | PERNO | 1 | | | | | |
| 17 | 5VX–14710–01 | TUBO DE ESCAPE COMPLETO 1 | 1 | | | | | |
| 18 | 5EB–14714–01 | .EMPAQUE DE SILENCIADOR | 1 | | | | | |
| 19 | 95814–08045 | .TORNILLO | 1 | | | | | |
| 20 | 5VX–1467K–00 | .SOPORTE DE SILENCIADOR 3 | 1 | | | | | |
| 21 | 91317–08030 | .PERNO | 2 | | | | | |
| 22 | 90480–10332 | .TAPON | 4 | | | | | |
| 23 | 95812–08014 | TORNILLO DE REBORDE | 2 | | | | | |
| 24 | 90201–082U5 | ARANDELA PLANA | 2 | | | | | |
| 25 | 5VX–14708–10 | PROTECTOR COMPLETA | 1 | | | | | |
| 26 | 90480–12006 | .TAPON | 2 | | | | | |
| 27 | 90387–061N6 | .ESPACIADOR | 2 | | | | | |

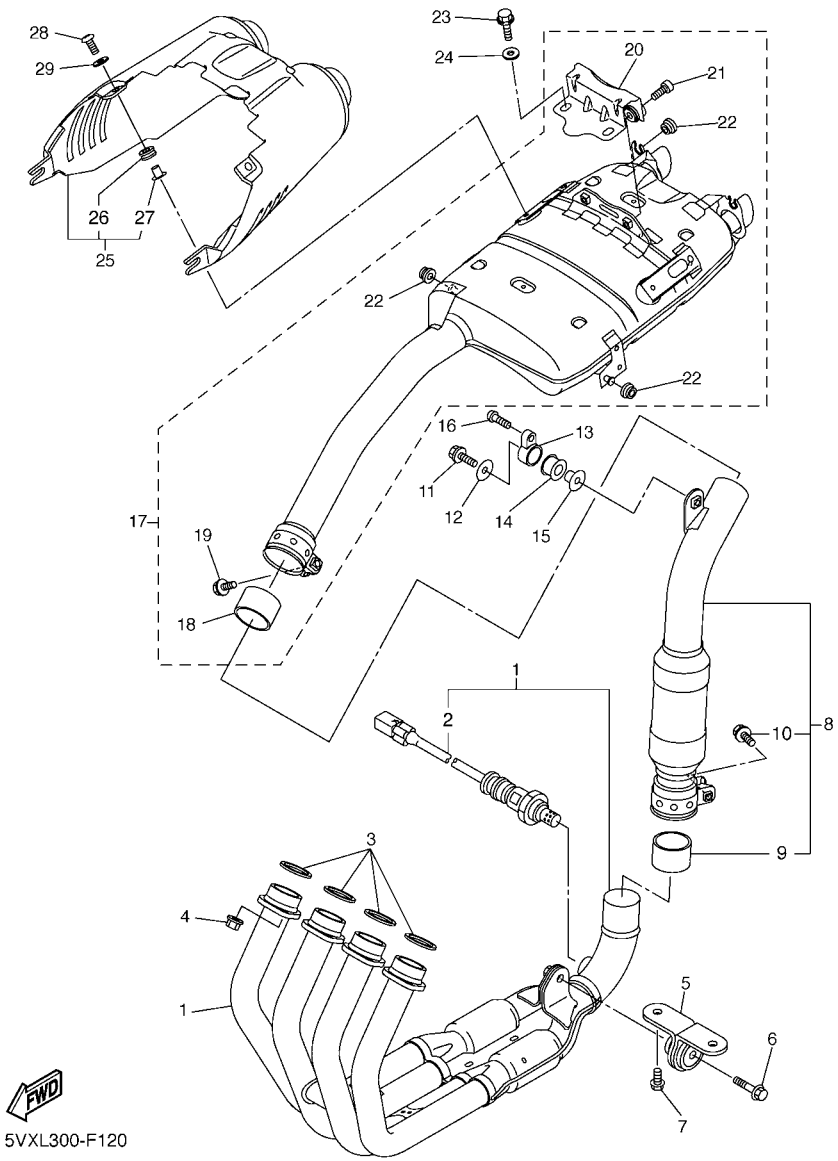


## FIG. 12 DESCARGA

| REF. Nº | CODIGO Nº | DESCRIPCION | 5S42 | | | | | OBSERVACIONES |
|---|---|---|---|---|---|---|---|---|
| 28 | 98902–06020 | TORNILLO DE AJUSTE | 2 | | | | | |
| 29 | 4FB–14766–00 | ARANDELA DE PROTECTOR | 2 | | | | | |

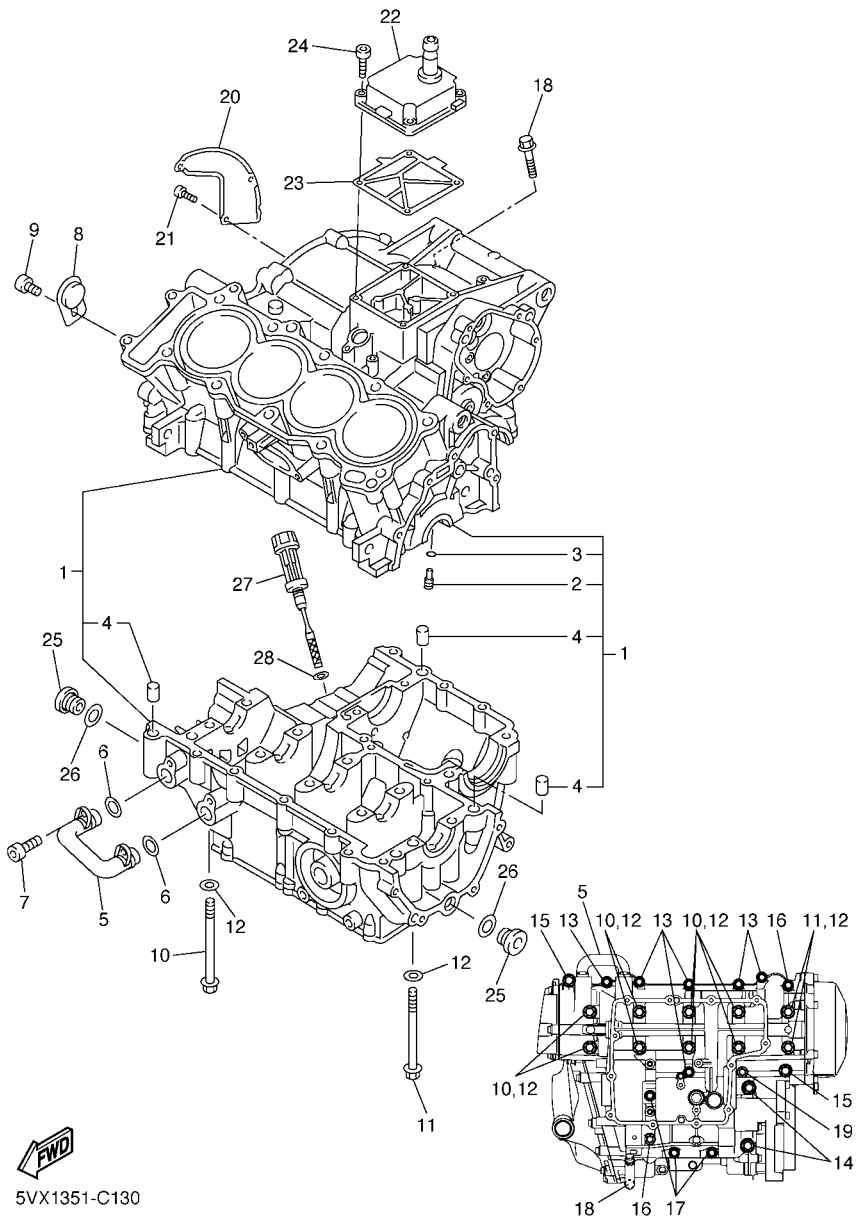


## FIG. 13 CARTER

| REF. Nº | CODIGO Nº | DESCRIPCION | 5S42 | | | | | OBSERVACIONES |
|---|---|---|---|---|---|---|---|---|
| 1 | 1B3–15100–01 | CARTER COMPLETO | 1 | | | | | |
| 2 | 5EB–15155–00 | .BOQUILLA 3 | 4 | | | | | |
| 3 | 93210–04092 | .ANILLO O | 4 | | | | | |
| 4 | 99530–10014 | .PASADOR, DE ESPIGA | 3 | | | | | |
| 5 | 5VX–13418–00 | TUBO DE ACEITE 2 | 1 | | | | | |
| 6 | 93210–14579 | ANILLO O | 2 | | | | | |
| 7 | 90110–06161 | TORNILLO ALLEN | 2 | | | | | |
| 8 | 5SL–15189–00 | TAPON | 1 | | | | | |
| 9 | 90149–06082 | TORNILLO DE REGLAJE | 1 | | | | | |
| 10 | 90105–087A0 | TORNILLO | 8 | | | | | |
| 11 | 90105–086A9 | TORNILLO | 2 | | | | | |
| 12 | 90201–087K3 | ARANDELA PLANA | 10 | | | | | |
| 13 | 95812–06055 | TORNILLO DE REBORDE | 6 | | | | | |
| 14 | 95812–08065 | TORNILLO DE REBORDE | 2 | | | | | |
| 15 | 90109–06168 | PERNO | 2 | | | | | |
| 16 | 95812–06065 | TORNILLO DE REBORDE | 2 | | | | | |
| 17 | 95812–06045 | TORNILLO DE REBORDE | 3 | | | | | |
| 18 | 95812–06100 | TORNILLO DE REBORDE | 1 | | | | | |
| 19 | 90105–06145 | TORNILLO | 1 | | | | | |
| 20 | 5SL–11165–00 | PLACA RESPIRADERO | 1 | | | | | |
| 21 | 90149–06082 | TORNILLO DE REGLAJE | 3 | | | | | |
| 22 | 5VX–15413–01 | CUBIERTA | 1 | | | | | |
| 23 | 5SL–15462–00 | EMPAQ CUBIERTA DE CARTER 3 | 1 | | | | | |
| 24 | 91314–06025 | PERNO | 4 | | | | | |
| 25 | 36Y–15189–00 | TAPON | 2 | | | | | |
| 26 | 93210–16325 | ANILLO O | 2 | | | | | |
| 27 | 5EB–15362–00 | TAPON DEL NIVEL DE ACEITE | 1 | | | | | |

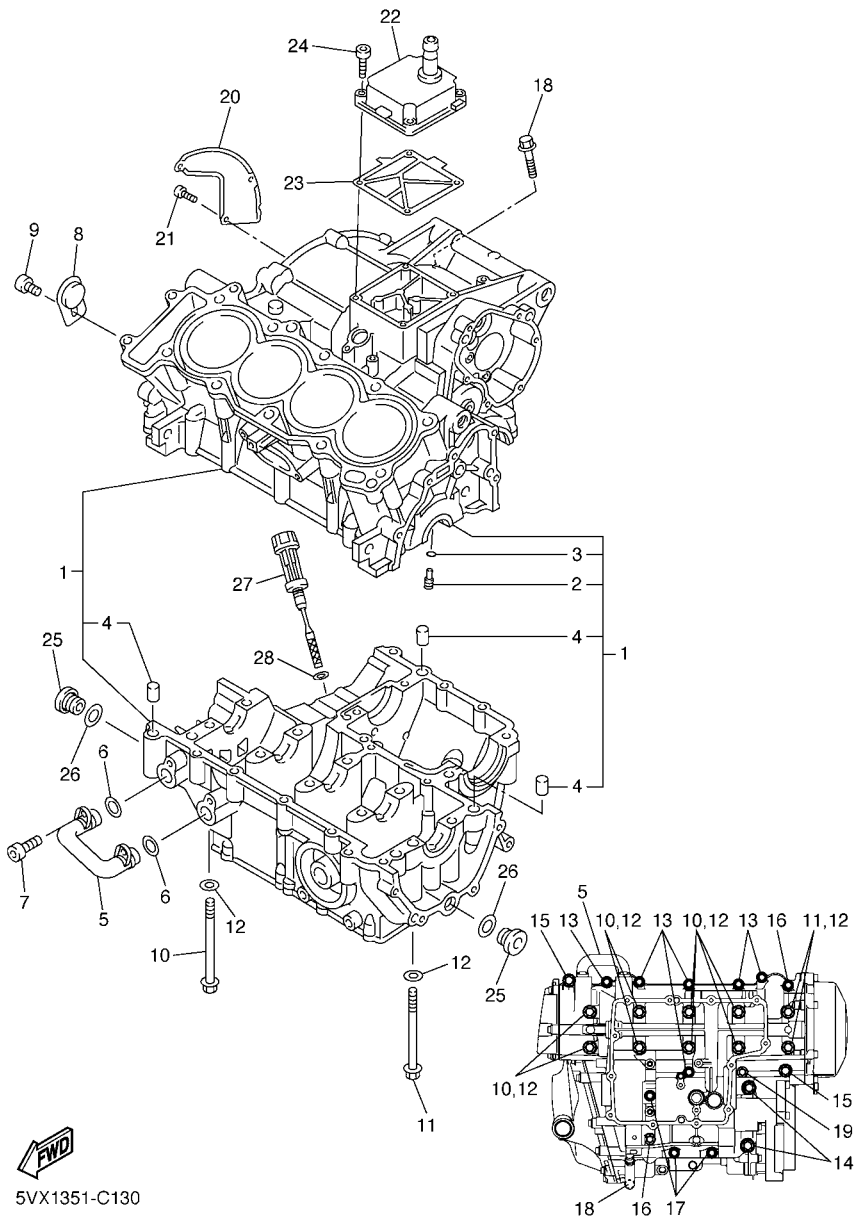


## FIG. 13 CARTER

| REF. Nº | CODIGO Nº | DESCRIPCION | 5S42 | | | | | OBSERVACIONES |
|---|---|---|---|---|---|---|---|---|
| 28 | 93210–09165 | ANILLO O | 1 | | | | | |

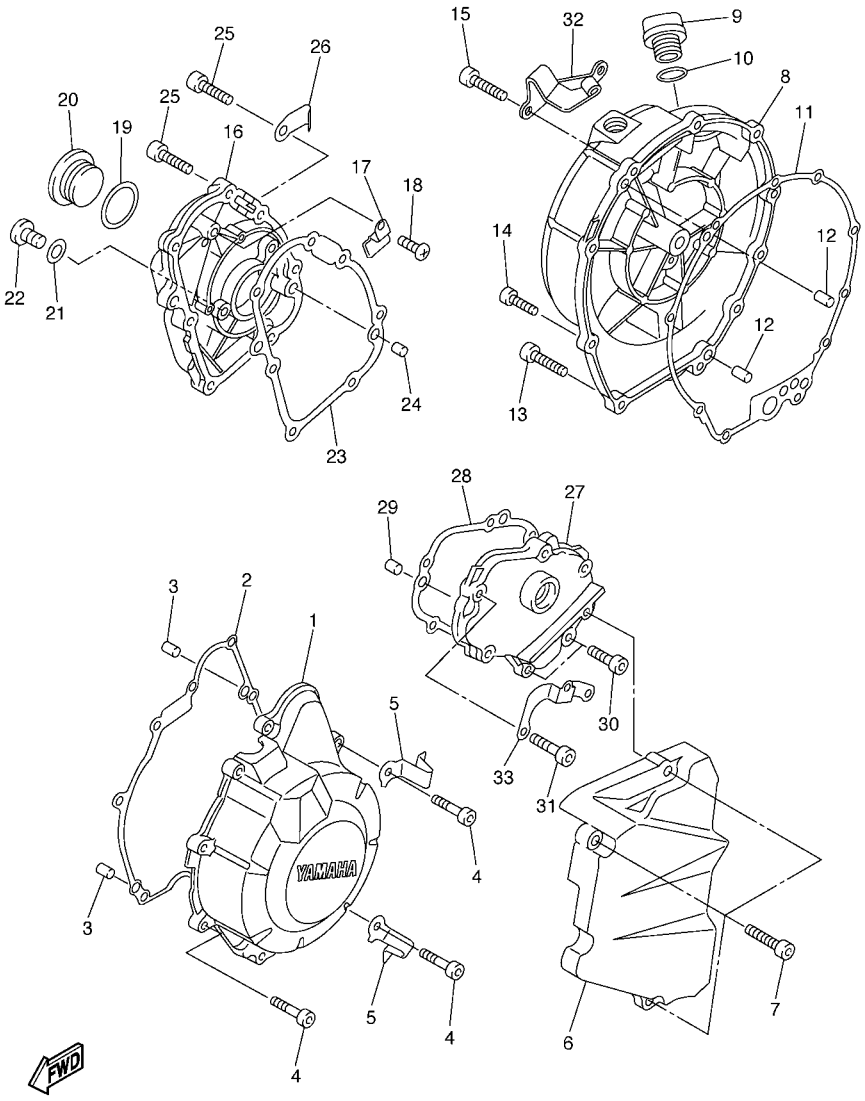


4P53300-F140

## FIG. 14 CUBIERTA DE CARTER 1

| REF. Nº | CODIGO Nº | DESCRIPCION | 5S42 | | | | | OBSERVACIONES |
|---|---|---|---|---|---|---|---|---|
| 1 | 1B3–15411–00 | CUBIERTA DE CARTER 1 | 1 | | | | | |
| 2 | 5VX–15451–01 | EMPAQ DE CUBIERTA DE CARTER | 1 | | | | | |
| 3 | 99530–08012 | PASADOR, DE ESPIGA | 2 | | | | | |
| 4 | 91314–06025 | PERNO | 9 | | | | | |
| 5 | 90465–08045 | BRIDA | 2 | | | | | |
| 6 | 1B3–15418–00 | CUBIERTA CAJA DE CADENA | 1 | | | | | |
| 7 | 91314–06025 | PERNO | 3 | | | | | |
| 8 | 1B3–15421–00 | TAPA DE CARTER DERECHA | 1 | | | | | |
| 9 | 3F9–15362–00 | TAPON DEL NIVEL DE ACEITE | 1 | | | | | |
| 10 | 93210–27194 | ANILLO O | 1 | | | | | |
| 11 | 5SL–15461–01 | JUNTA TAPA CARTER DERECHO 2 | 1 | | | | | |
| 12 | 93608–17263 | PASADOR DE CLAVIJA | 2 | | | | | |
| 13 | 91314–06025 | PERNO | 7 | | | | | |
| 14 | 90110–06022 | TORNILLO ALLEN | 1 | | | | | |
| 15 | 91314–06030 | PERNO | 2 | | | | | |
| 16 | 1B3–15416–00 | CUBIERTA DE BOMBA DE ACEITE | 1 | | | | | |
| 17 | 90465–14011 | BRIDA | 1 | | | | | |
| 18 | 98507–06012 | TORNILLO DE CABEZA PLANA | 1 | | | | | |
| 19 | 93210–32172 | ANILLO O | 1 | | | | | |
| 20 | 90340–32004 | TORNILLO, DE DRENAJE | 1 | | | | | |
| 21 | 90430–08143 | JUNTA | 1 | | | | | |
| 22 | 92014–08014 | PERNO | 1 | | | | | |
| 23 | 5SL–15456–01 | EMPAQ CUBTA.BOMBA ACEITE 1 | 1 | | | | | |
| 24 | 99530–08012 | PASADOR, DE ESPIGA | 2 | | | | | |
| 25 | 91314–06020 | PERNO | 7 | | | | | |
| 26 | 90465–10042 | BRIDA | 1 | | | | | |
| 27 | 1B3–15425–00 | CUBIERTA DE GENERADOR 2 | 1 | | | | | |

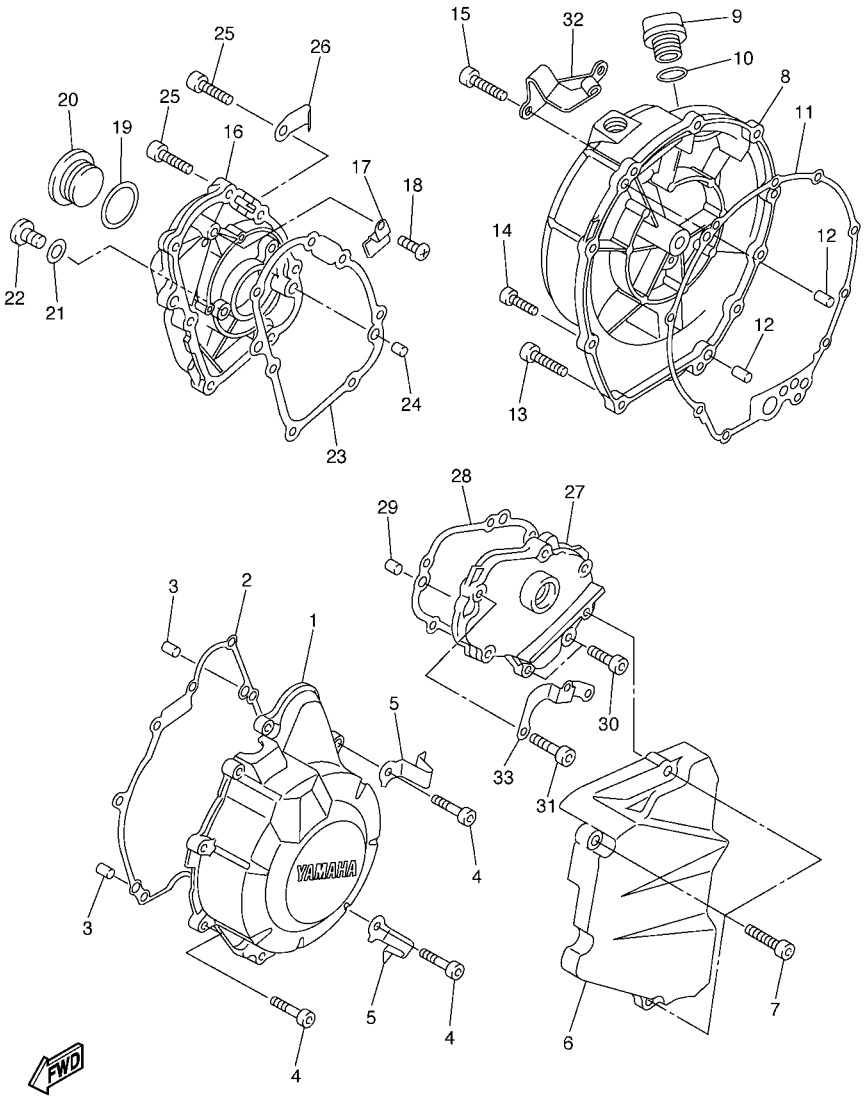


## FIG. 14 CUBIERTA DE CARTER 1

| REF. Nº | CODIGO Nº | DESCRIPCION | 5S42 | | | | | OBSERVACIONES |
|---|---|---|---|---|---|---|---|---|
| 28 | 5VX–15463–01 | EMPAQ CUBIERTA DEL CARTER 2 | 1 | | | | | |
| 29 | 99530–08012 | PASADOR, DE ESPIGA | 2 | | | | | |
| 30 | 91314–06020 | PERNO | 2 | | | | | |
| 31 | 91314–06025 | PERNO | 4 | | | | | |
| 32 | 5VX–15441–00 | SOSTEN DE CABLE DE EMBRAGUE | 1 | | | | | |
| 33 | 4P5–2588G–00 | SOPORTE DE MANGUERA FRENO 6 | 1 | | | | | |

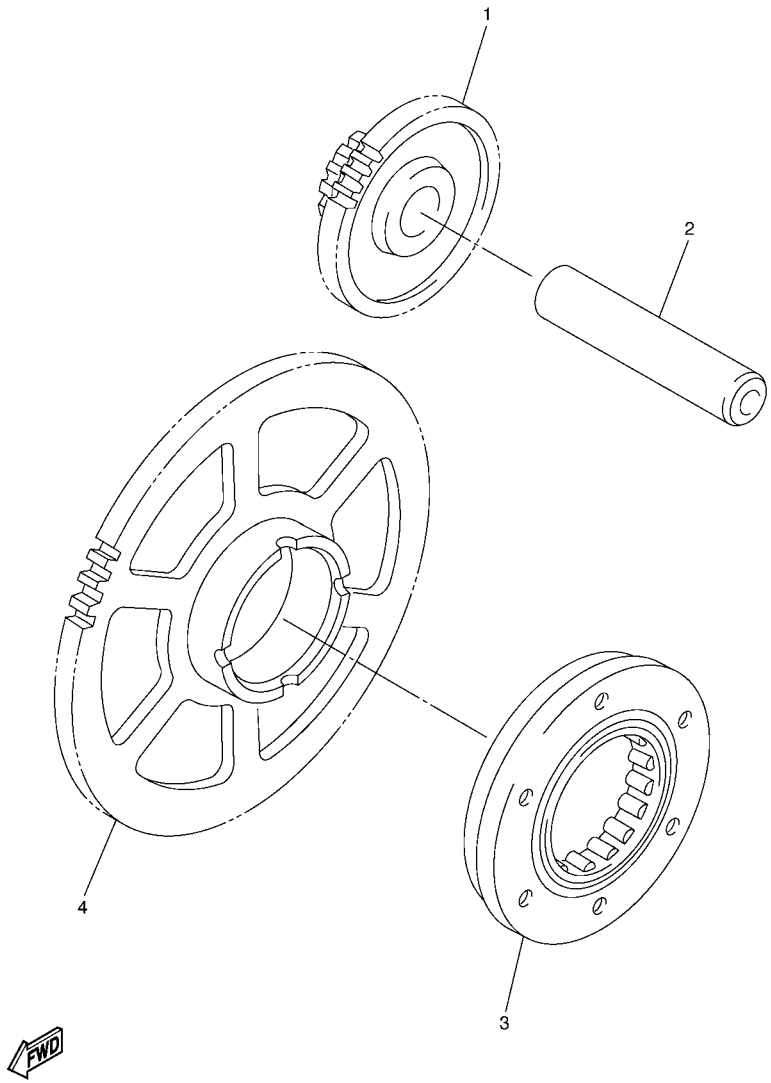


## FIG. 15 ARRANQUE

| REF. Nº | CODIGO Nº | DESCRIPCION | 5S42 | | | | | OBSERVACIONES |
|---|---|---|---|---|---|---|---|---|
| 1 | 5SL–15512–00 | ENGRENAJE NEUTRO | 1 | | | | | |
| 2 | 5EB–15521–00 | EJE 1 | 1 | | | | | |
| 3 | 5SL–15590–00 | ENSAMBLE GUIA CADENA ARRANQUE | 1 | | | | | |
| 4 | 5MT–15515–00 | ENGRANAJE 3 | 1 | | | | | |

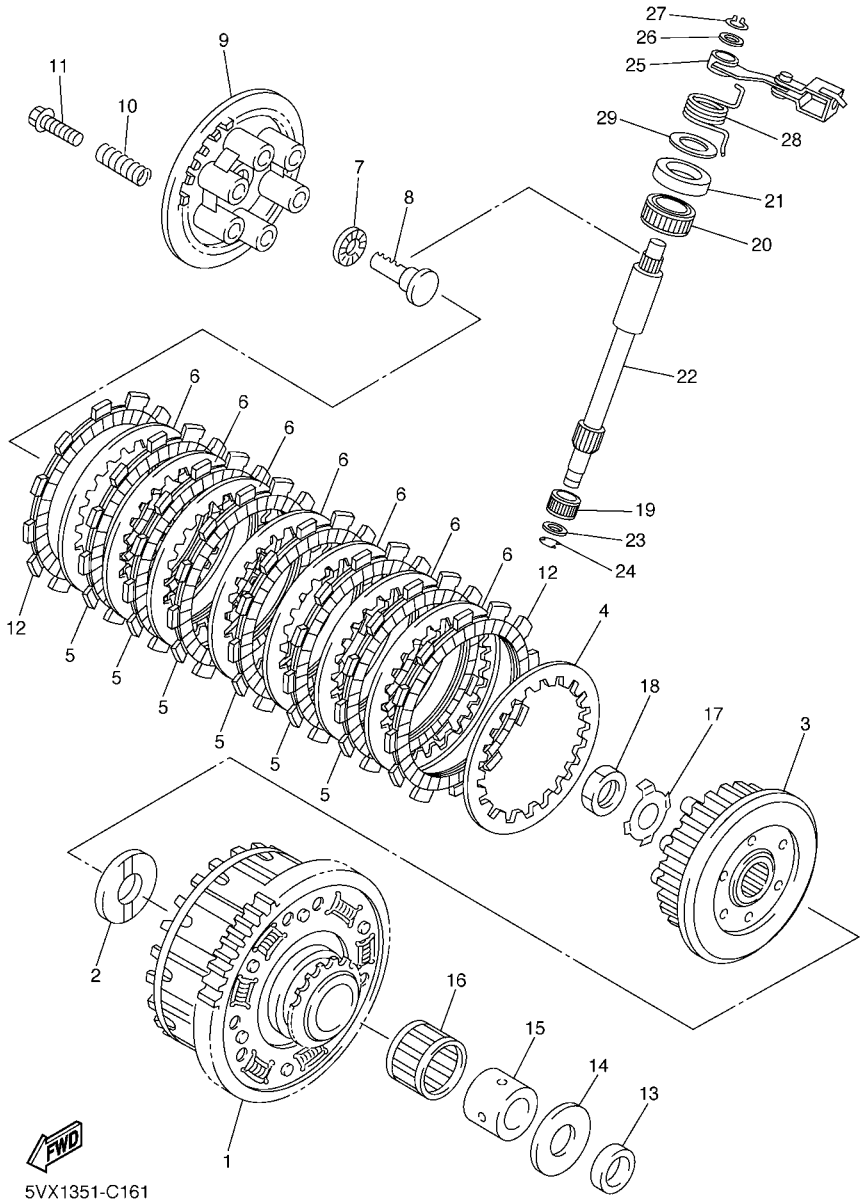


## FIG. 16 EMBRAGUE

| REF. Nº | CODIGO Nº | DESCRIPCION | 5S42 | | | | | OBSERVACIONES |
|---|---|---|---|---|---|---|---|---|
| 1 | 5VX–16150–00 | CAMPANA DE EMBRAGUE | 1 | | | | | |
| 2 | 5EB–16154–00 | ARANDELA, DE EMPUJE 1 | 1 | | | | | |
| 3 | 5VX–16371–00 | CUBO, DE EMBRAGUE | 1 | | | | | |
| 4 | 168–16324–00 | DISCO, DE EMBRAGUE (T=2.3) | 1 | | | | | |
| 5 | 4FN–16321–00 | PLACA DE FRICCION | 6 | | | | | |
| 6 | 3J2–16324–00 | DISCO, DE EMBRAGUE (T=2.0) | 7 | | | | | |
| 7 | 93306–00304 | COJINETE | 1 | | | | | |
| 8 | 5EB–16356–01 | VARILLA DE EMPUJE 1 | 1 | | | | | |
| 9 | 5EB–16351–01 | PLATO DE PRESION | 1 | | | | | |
| 10 | 90501–225A9 | RESORTE DE COMPRESION | 6 | | | | | |
| 11 | 90159–06002 | TORNILLO CON VALONA | 6 | | | | | |
| 12 | 4H7–16321–02 | PLACA DE FRICCION | 2 | | | | | |
| 13 | 90201–255A6 | ARANDELA PLANA | 1 | | | | | |
| 14 | 1AE–16164–00 | PLACA DE EMPUJE 2 | 1 | | | | | |
| 15 | 90387–25010 | ESPACIADOR | 1 | | | | | |
| 16 | 93310–340N8 | COJINETE DE RODILLOS | 1 | | | | | |
| 17 | 90215–20004 | ARANDELA DE CIERRE | 1 | | | | | |
| 18 | 90170–20008 | TUERCA | 1 | | | | | |
| 19 | 93317–11096 | COJINETE | 1 | | | | | |
| 20 | 93315–31502 | COJINETE DE RODILLOS | 1 | | | | | |
| 21 | 93102–15212 | SELLO ACEITE | 1 | | | | | |
| 22 | 5VX–16382–00 | EJE DE PALANCA DE EMPUJE | 1 | | | | | |
| 23 | 92907–08600 | ARANDELA | 1 | | | | | |
| 24 | 99001–07600 | PRESILLA REDONDA | 1 | | | | | |
| 25 | 5VX–16340–00 | PALANCA DE EMPUJE COMPLETA | 1 | | | | | |
| 26 | 90201–10119 | ARANDELA PLANA | 1 | | | | | |
| 27 | 99009–10400 | PRESILLA REDONDA | 1 | | | | | |

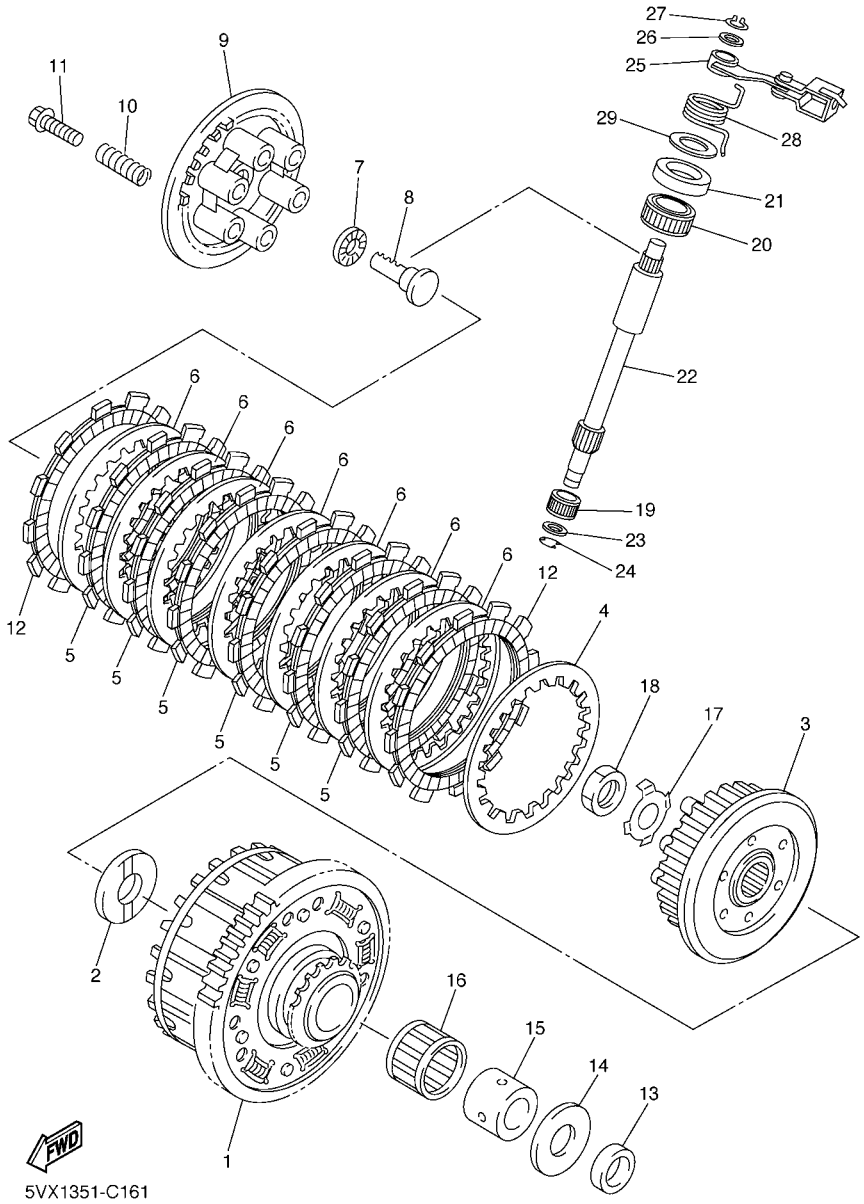


## FIG. 16 EMBRAGUE

| REF. Nº | CODIGO Nº | DESCRIPCION | 5S42 | | | | | OBSERVACIONES |
|---|---|---|---|---|---|---|---|---|
| 28 | 90508–18016 | RESORTE DE TORSION | 1 | | | | | |
| 29 | 90201–15013 | ARANDELA PLANA | 1 | | | | | |

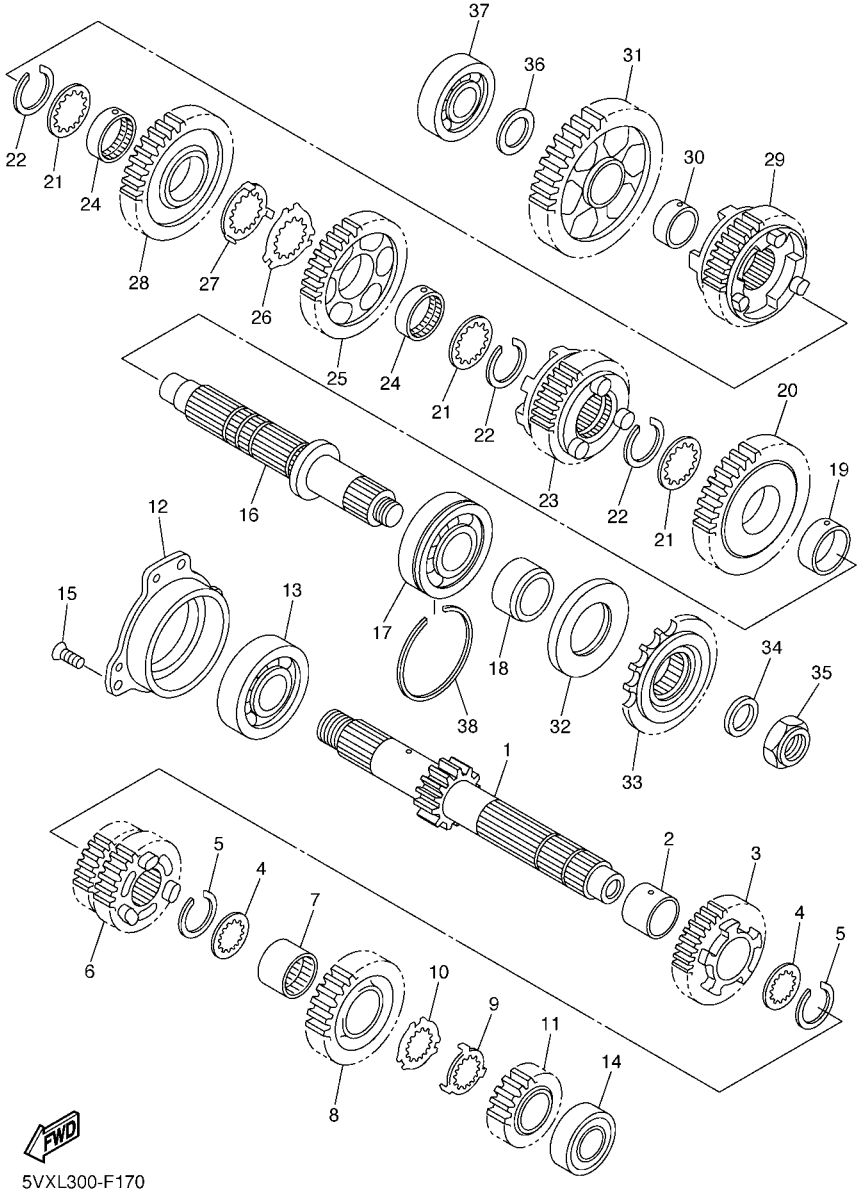


5VXL300-F170

## FIG. 17 TRANSMISION

| REF. Nº | CODIGO Nº | DESCRIPCION | 5S42 | | | | | OBSERVACIONES |
|---|---|---|---|---|---|---|---|---|
| 1 | 5SL–17411–00 | EJE, PRINCIPAL (13T) | 1 | | | | | |
| 2 | 90387–253M6 | ESPACIADOR | 1 | | | | | |
| 3 | 5VX–17151–00 | ENGRANAJE PINON DE 5TA (21T) | 1 | | | | | |
| 4 | 90209–21332 | ARANDELA DE SEPARACION | 2 | | | | | |
| 5 | 93440–25186 | SEGURO | 2 | | | | | |
| 6 | 5SL–17131–20 | ENGRANAJE PINON DE 3RA(18/24T) | 1 | | | | | |
| 7 | 90387–2513E | ESPACIADOR | 1 | | | | | |
| 8 | 5SL–17161–00 | ENGRANAJE PINON 6TA (24T) | 1 | | | | | |
| 9 | 90209–22352 | ARANDELA DE SEPARACION | 1 | | | | | |
| 10 | 90209–21351 | ARANDELA DE SEPARACION | 1 | | | | | |
| 11 | 5SL–17121–00 | ENGRANAJE DE PINON DE 2DA(19T) | 1 | | | | | |
| 12 | 5EB–15163–01 | CAJA DE COJINETE 1 | 1 | | | | | |
| 13 | 93306–30525 | COJINETE | 1 | | | | | |
| 14 | 93306–20464 | COJINETE | 1 | | | | | |
| 15 | 90151–06008 | TORNILLO EMBUTIDO | 3 | | | | | |
| 16 | 4S8–17421–00 | EJE SECUNDARIO | 1 | | | | | |
| 17 | 93306–30546 | COJINETE | 1 | | | | | |
| 18 | 90387–2504A | ESPACIADOR | 1 | | | | | |
| 19 | 90387–2813C | ESPACIADOR | 1 | | | | | |
| 20 | 5VX–17221–00 | ENGRANAJE RUEDA DE 2DA (37T) | 1 | | | | | |
| 21 | 90209–25342 | ARANDELA DE SEPARACION | 3 | | | | | |
| 22 | 93440–28062 | SEGURO | 3 | | | | | |
| 23 | 5VX–17261–00 | ENGRANAJE RUEDA DE 6TA (26T) | 1 | | | | | |
| 24 | 90387–2813D | ESPACIADOR | 2 | | | | | |
| 25 | 5SL–17241–00 | ENGRANAJE DE RUEDA 4TA (32T) | 1 | | | | | |
| 26 | 90209–25349 | ARANDELA DE SEPARACION | 1 | | | | | |
| 27 | 90209–25350 | ARANDELA DE SEPARACION | 1 | | | | | |

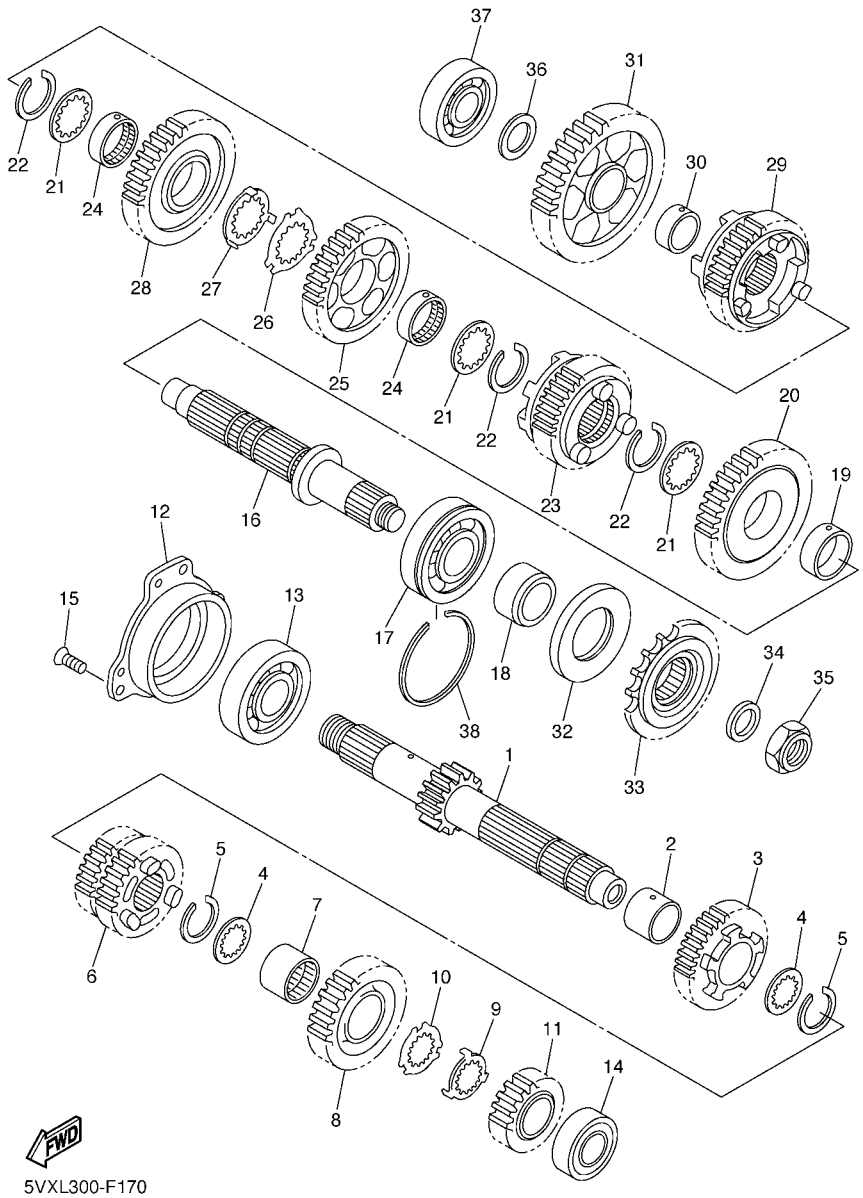


## FIG. 17 TRANSMISION

| REF. Nº | CODIGO Nº | DESCRIPCION | 5S42 | | | | | OBSERVACIONES |
|---|---|---|---|---|---|---|---|---|
| 28 | 5SL–17231–00 | ENGRANAJE RUEDA DE 3RA (28T) | 1 | | | | | |
| 29 | 5VX–17251–00 | ENGRANAJE RUEDA DE 5TA (25T) | 1 | | | | | |
| 30 | 90387–2202V | ESPACIADOR | 1 | | | | | |
| 31 | 5SL–17211–00 | ENGRANAJE RUEDA DE 1 RA (37T) | 1 | | | | | |
| 32 | 93102–35423 | SELLO ACEITE | 1 | | | | | |
| 33 | 5VX–17460–00 | RUEDA DENTADA, TRACC (16T) | 1 | | | | | |
| 34 | 90201–20023 | ARANDELA PLANA | 1 | | | | | |
| 35 | 90179–20011 | TUERCA | 1 | | | | | |
| 36 | 90201–20278 | ARANDELA PLANA | 1 | | | | | |
| 37 | 93306–20464 | COJINETE | 1 | | | | | |
| 38 | 278–17424–01 | PRESILLA REDONDA 1 | 1 | | | | | |

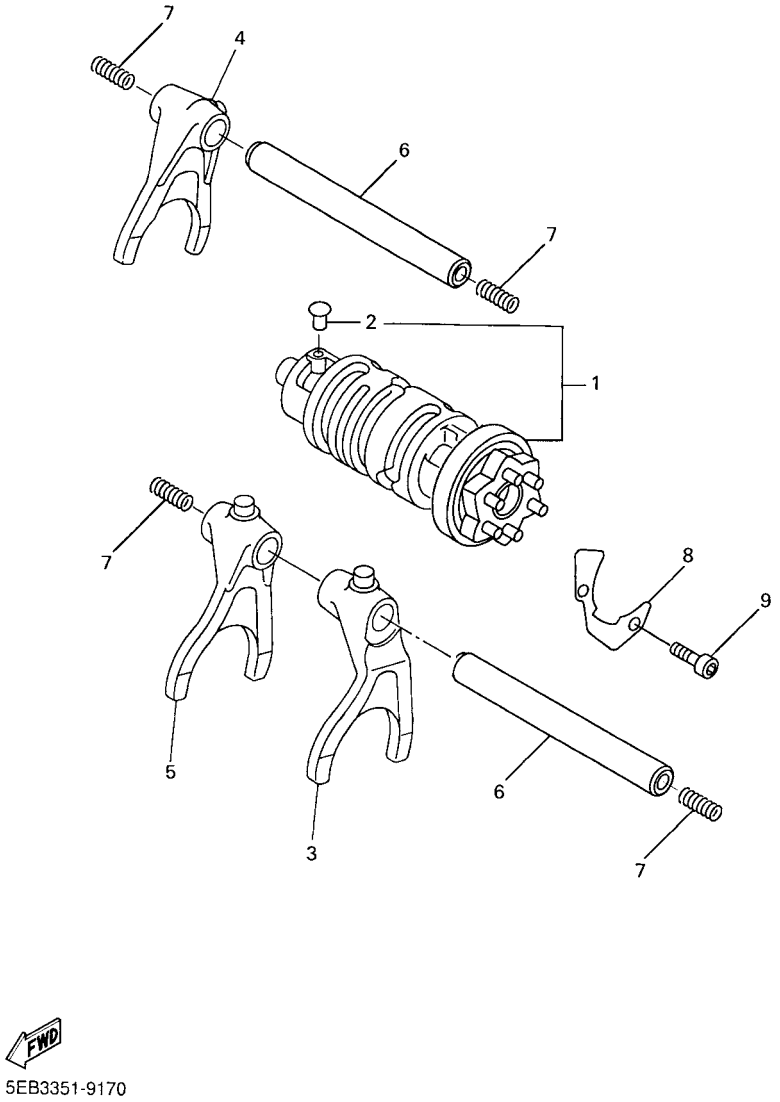


## FIG. 18 LEVA DE CAMBIO & HORQUILLA

| REF. Nº | CODIGO Nº | DESCRIPCION | 5S42 | | | | | OBSERVACIONES |
|---|---|---|---|---|---|---|---|---|
| 1 | 5VX–18540–00 | LEVA DEL CAMBIO COMPLETA | 1 | | | | | |
| 2 | 136–18542–00 | .PUNTO MUERTO | 1 | | | | | |
| 3 | 5SL–18511–00 | HORQUILLA DEL CAMBIO 1 | 1 | | | | | |
| 4 | 5MT–18512–00 | HORQUILLA DEL CAMBIO 2 | 1 | | | | | |
| 5 | 5EB–18513–00 | HORQUILLA DEL CAMBIO 3 | 1 | | | | | |
| 6 | 4XV–18531–00 | BARRA GUIA HORQ. CAMBIO 1 | 2 | | | | | |
| 7 | 90501–064L1 | RESORTE DE COMPRESION | 4 | | | | | |
| 8 | 5EB–18536–00 | TOPE DE PALANCA SELECTOR | 1 | | | | | |
| 9 | 90110–06018 | TORNILLO ALLEN | 2 | | | | | |

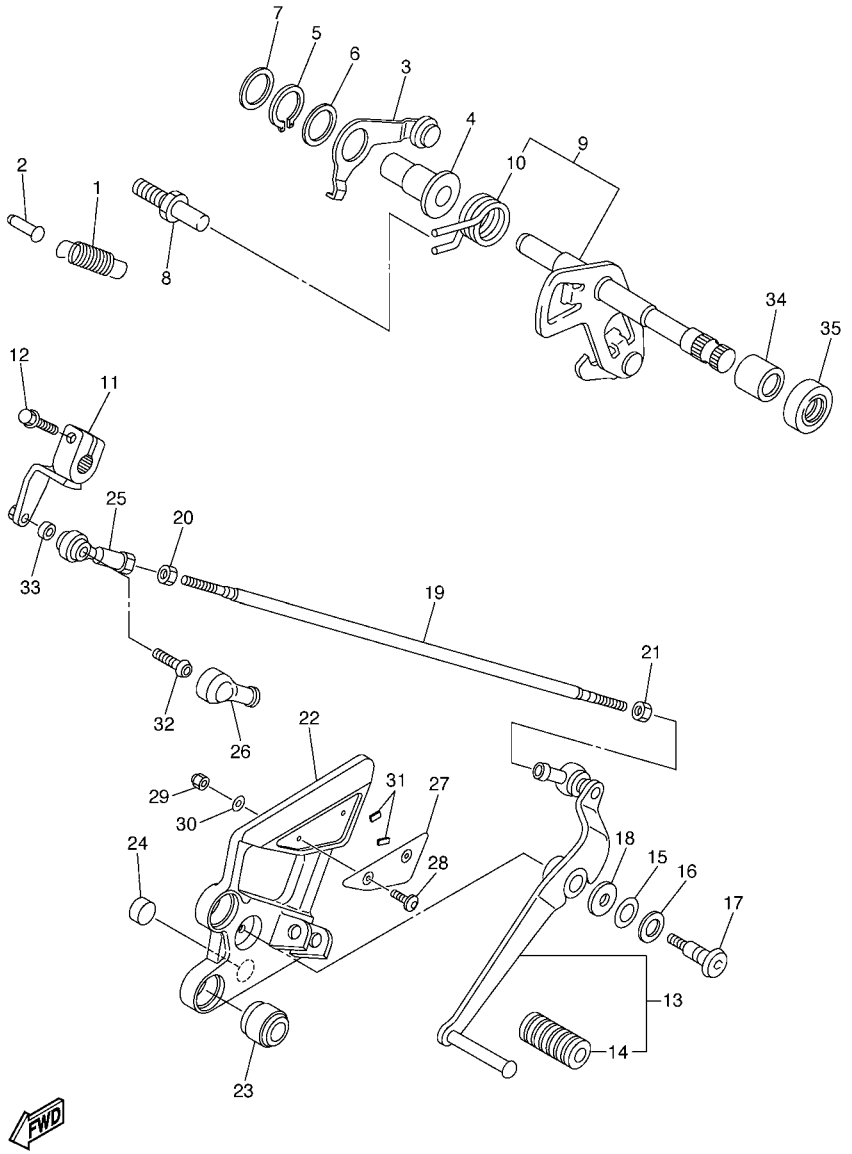


5VXL300-F190

## FIG. 19 EJE DE CAMBIO & PEDAL

| REF. Nº | CODIGO Nº | DESCRIPCION | 5S42 | | | | | OBSERVACIONES |
|---|---|---|---|---|---|---|---|---|
| 1 | 90506–14003 | RESORTE DE TENSION | 1 | | | | | |
| 2 | 132–16346–00 | GANCHO DE RESORTE | 1 | | | | | |
| 3 | 5VX–18140–00 | PALANCA DE TOPE COMPLETA | 1 | | | | | |
| 4 | 90387–127V3 | ESPACIADOR | 1 | | | | | |
| 5 | 99009–17400 | PRESILLA REDONDA | 1 | | | | | |
| 6 | 90201–177G4 | ARANDELA PLANA | 1 | | | | | |
| 7 | 90201–154E8 | ARANDELA, DE PLACA (T=1.0) | 1 | | | | | |
| 8 | 1D7–18127–00 | PASADOR DE PALANCA | 1 | | | | | |
| 9 | 5VX–18101–11 | EJE SELECTOR COMPLETO | 1 | | | | | |
| 10 | 90508–295B2 | .RESORTE DE TORSION | 1 | | | | | |
| 11 | 5VX–18112–01 | BRAZO DEL CAMBIO | 1 | | | | | |
| 12 | 95824–06020 | TORNILLO | 1 | | | | | |
| 13 | 5VX–18110–00 | PEDAL DE CAMBIO COMPLETO | 1 | | | | | |
| 14 | 5EB–18113–00 | .FUNDA DEL PEDAL DEL CAMBIO | 1 | | | | | |
| 15 | 90201–12013 | ARANDELA PLANA | 1 | | | | | |
| 16 | 90206–12074 | ARANDELA ONDULADA | 1 | | | | | |
| 17 | 4BP–27434–01 | PERNO | 1 | | | | | |
| 18 | 90201–08784 | ARANDELA PLANA | 1 | | | | | |
| 19 | 5VX–18115–02 | VARILLA DEL CAMBIO | 1 | | | | | |
| 20 | 90170–06228 | TUERCA | 1 | | | | | |
| 21 | 95304–06700 | TUERCA | 1 | | | | | |
| 22 | 5VX–27442–10 | SOPORTE 2 | 1 | | | | | |
| 23 | 5VX–27424–00 | AMORTIGUADOR DE APOYAPIE 2 | 2 | | | | | |
| 24 | 5VX–27114–00 | TOPE DE PUNTAL PRINCIPAL | 1 | | | | | |
| 25 | 5VX–18116–00 | VARILLA DE CONECTOR 1 | 1 | | | | | |
| 26 | 5VX–18154–00 | CUBIERTA GUARDAPOLVO | 1 | | | | | |
| 27 | 4S8–27445–00 | PLACE 1 | 1 | | | | | |

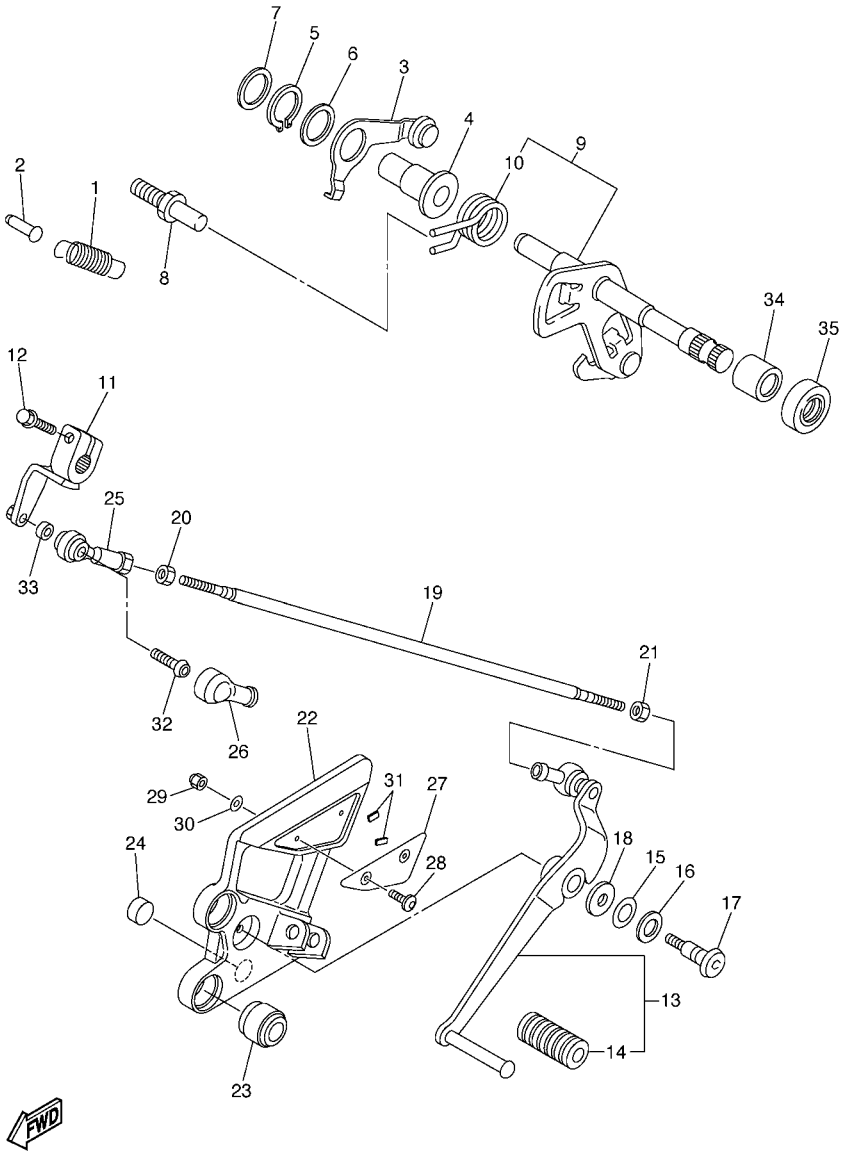


5VXL300-F190

## FIG. 19 EJE DE CAMBIO & PEDAL

| REF. Nº | CODIGO Nº | DESCRIPCION | 5S42 | | | | | OBSERVACIONES |
|---|---|---|---|---|---|---|---|---|
| 28 | 92014–05012 | PERNO | 2 | | | | | |
| 29 | 95607–05100 | TUERCA AUTOBLOCANTE | 2 | | | | | |
| 30 | 92990–05200 | ARANDELA PLANA | 2 | | | | | |
| 31 | 4S8–27415–00 | PLACA DE APOYAPIE | 2 | | | | | |
| 32 | 90111–06019 | TORNILLO | 1 | | | | | |
| 33 | 90387–06372 | ESPACIADOR | 1 | | | | | |
| 34 | 93317–11295 | COJINETE | 1 | | | | | |
| 35 | 93102–12106 | SELLO ACEITE (SD 12-22-5 HS) | 1 | | | | | |

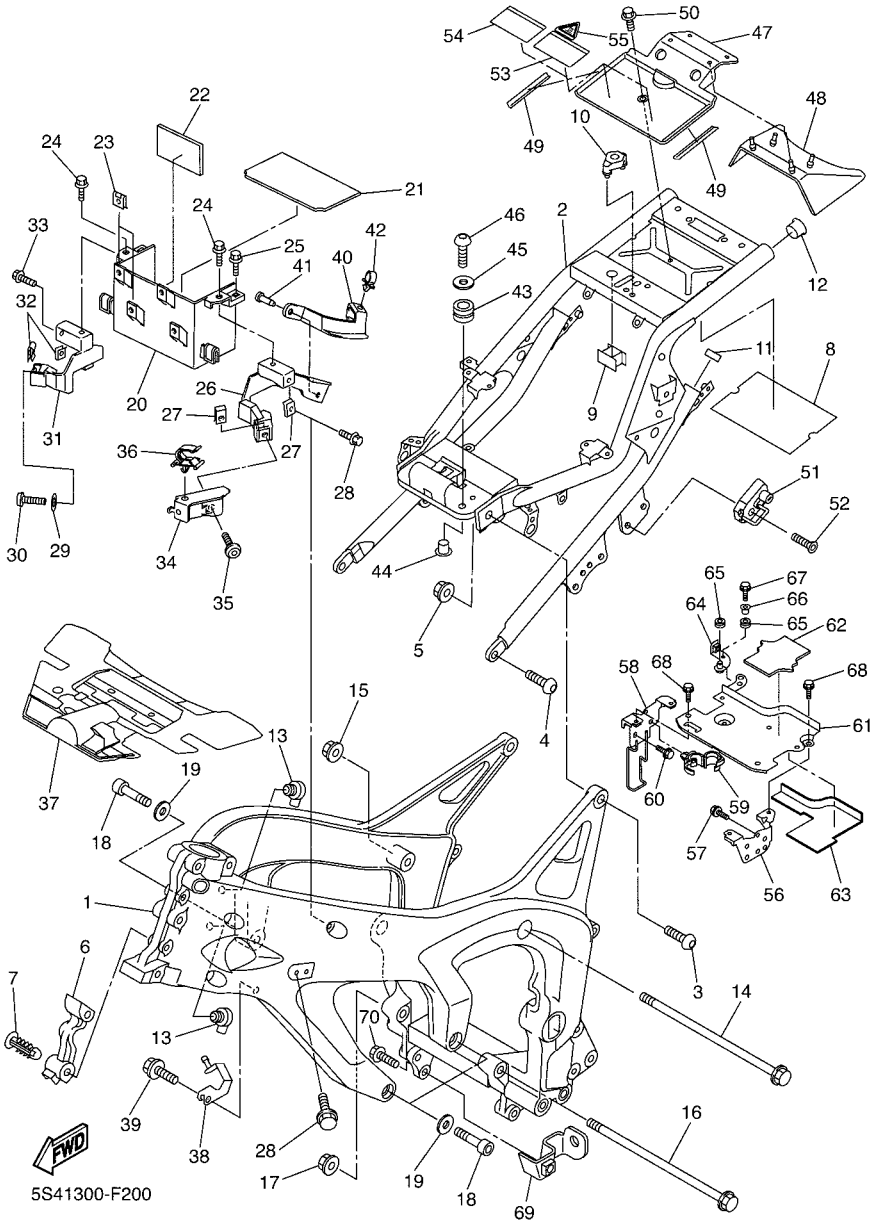


## FIG. 20 CUADRO

| REF. Nº | CODIGO Nº | DESCRIPCION | 5S42 | | | | | OBSERVACIONES |
|---|---|---|---|---|---|---|---|---|
| 1 | 4S8–21110–09 | ARMAZON COMPLETO | 1 | | | | | |
| 2 | 4S8–21190–09 | CUADRO TRASERO COMPLETA | 1 | | | | | |
| 3 | 90149–10006 | TORNILLO DE REGLAJE | 2 | | | | | |
| 4 | 90149–10012 | TORNILLO DE REGLAJE | 2 | | | | | |
| 5 | 95607–10200 | TUERCA DE AUTO-CIERRE | 2 | | | | | |
| 6 | 1B3–2117F–00 | CUBIERTA | 1 | | | | | |
| 7 | 90338–08220 | TAPON | 4 | | | | | |
| 8 | 5VX–21268–00 | SELLO | 1 | | | | | |
| 9 | 5VX–2139B–00 | SELLO | 1 | | | | | |
| 10 | 5VX–2140A–00 | TOPE DE AMORTIGUADOR | 1 | | | | | |
| 11 | 3YJ–24481–00 | TAPON | 2 | | | | | |
| 12 | 90338–21145 | TAPON | 1 | | | | | |
| 13 | 5VX–21279–10 | TAPON CIEGO | 2 | | | | | |
| 14 | 90105–10032 | TORNILLO | 1 | | | | | |
| 15 | 90185–10002 | TUERCA AUTOBLOCANTE | 1 | | | | | |
| 16 | 90105–10N53 | TORNILLO | 1 | | | | | |
| 17 | 90185–10002 | TUERCA AUTOBLOCANTE | 1 | | | | | |
| 18 | 91314–10050 | PERNO | 3 | | | | | |
| 19 | 90201–10020 | ARANDELA PLANA | 3 | | | | | |
| 20 | 5VX–2177G–00 | CAJA DE BATERIA | 1 | | | | | |
| 21 | 5VX–82122–00 | ASIENTO DE BATERIA | 1 | | | | | |
| 22 | 5EJ–2414H–00 | EQUILIBRIO, CUBIERTA | 1 | | | | | |
| 23 | 90183–06053 | TUERCA DE RESORTE | 2 | | | | | |
| 24 | 90109–06060 | PERNO | 2 | | | | | |
| 25 | 95807–06025 | TORNILLO | 2 | | | | | |
| 26 | 5VX–21238–00 | SOPORTE | 1 | | | | | |
| 27 | 90183–060A1 | TUERCA DE RESORTE | 2 | | | | | |

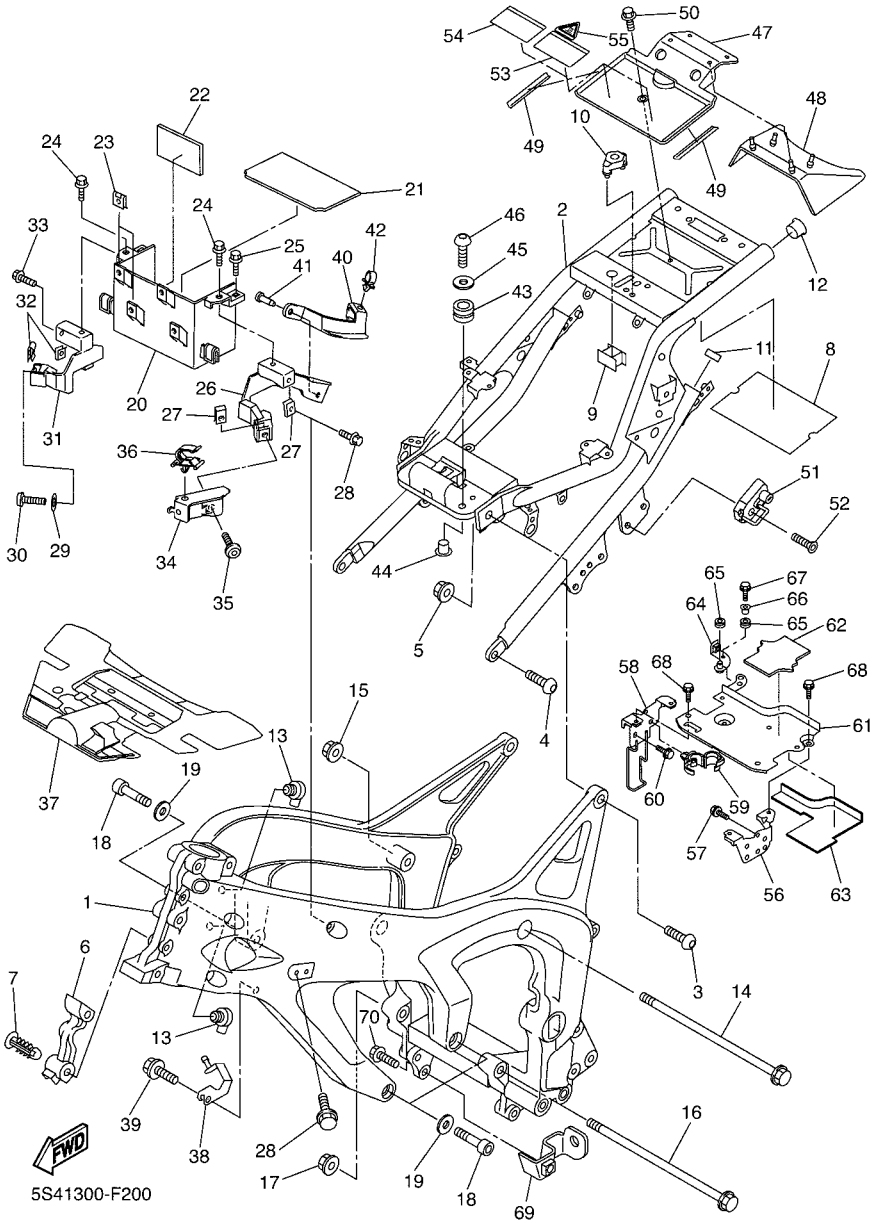


## FIG. 20 CUADRO

| REF. Nº | CODIGO Nº | DESCRIPCION | 5S42 | | | | | OBSERVACIONES |
|---|---|---|---|---|---|---|---|---|
| 28 | 90105–06557 | TORNILLO | 1 | | | | | |
| 29 | 90201–06M30 | ARANDELA PLANA | 1 | | | | | |
| 30 | 90149–06023 | TORNILLO DE REGLAJE | 1 | | | | | |
| 31 | 5VX–21239–00 | SOPORTE 2 | 1 | | | | | |
| 32 | 90183–060A1 | TUERCA DE RESORTE | 2 | | | | | |
| 33 | 90105–06557 | TORNILLO | 1 | | | | | |
| 34 | 1B3–23377–20 | SOPORTE DE BOCINA | 1 | | | | | |
| 35 | 90149–06023 | TORNILLO DE REGLAJE | 1 | | | | | |
| 36 | 90464–14001 | BRIDA | 1 | | | | | |
| 37 | 5VX–2117M–01 | CUBIERTA | 1 | | | | | |
| 38 | 5VX–21249–00 | SOPORTE | 1 | | | | | |
| 39 | 95027–06012 | PERNO, DE BRIDA | 1 | | | | | |
| 40 | 5VX–2135F–00 | CUBIERTA | 1 | | | | | |
| 41 | 90269–08066 | REMACHE | 2 | | | | | |
| 42 | 90464–15157 | BRIDA | 1 | | | | | |
| 43 | 90480–12237 | TAPON | 2 | | | | | |
| 44 | 90387–06078 | ESPACIADOR | 2 | | | | | |
| 45 | 90201–06055 | ARANDELA PLANA | 2 | | | | | |
| 46 | 92017–06020 | PERNO | 2 | | | | | |
| 47 | 5VX–2139W–00 | CUBIERTA | 1 | | | | | |
| 48 | 5VX–2139R–00 | CUBIERTA 2 | 1 | | | | | |
| 49 | 5VX–21269–00 | SELLO | 2 | | | | | |
| 50 | 90109–067F4 | PERNO | 1 | | | | | |
| 51 | 4R8–21308–01 | PORTACASCO COMPLETO | 1 | | | | | |
| 52 | 90151–06018 | TORNILLO EMBUTIDO | 1 | | | | | |
| 53 | 5VX–2117B–31 | ETIQUETA DE ADVERTENCIA | 1 | | | | | |
| 54 | 5VX–2117B–41 | ETIQUETA DE ADVERTENCIA | 1 | | | | | |

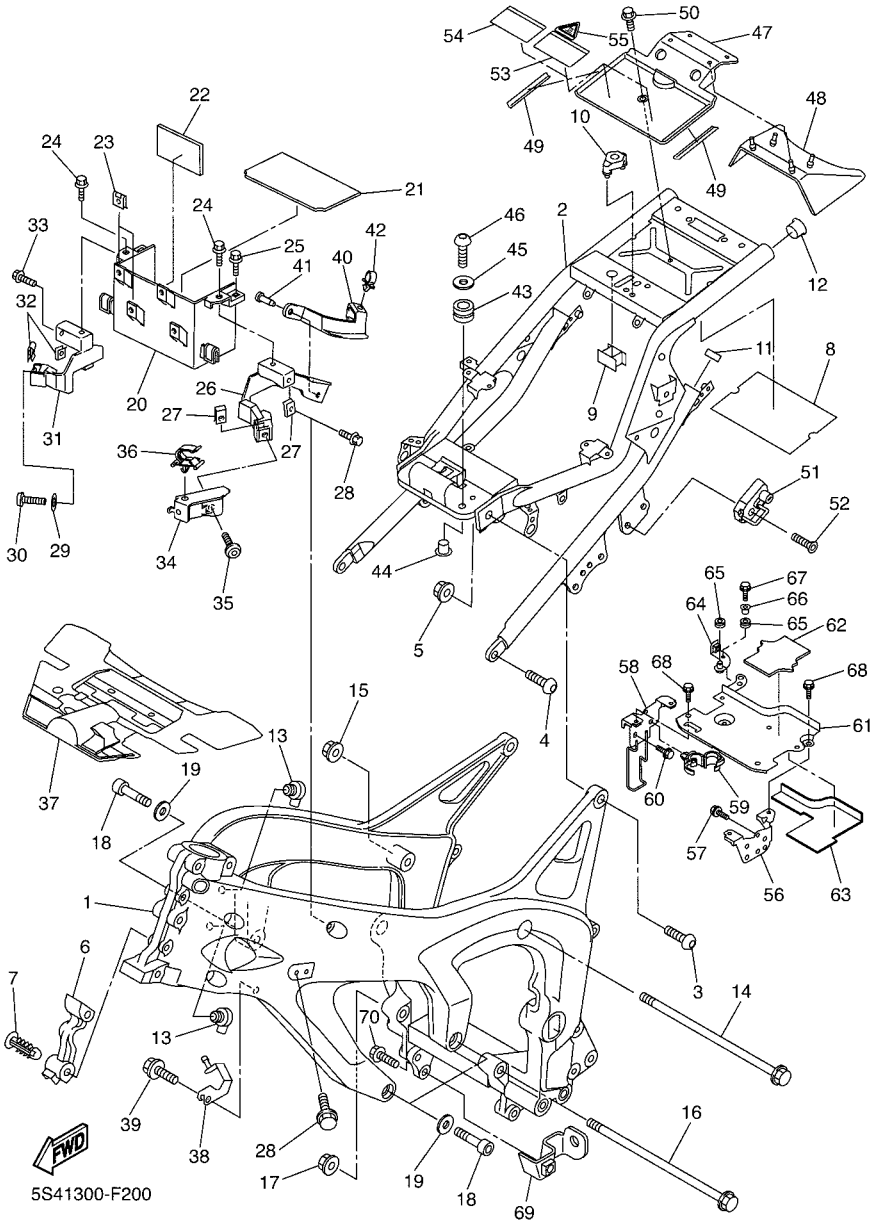


## FIG. 20 CUADRO

| REF. Nº | CODIGO Nº | DESCRIPCION | 5S42 | | | | | OBSERVACIONES |
|---|---|---|---|---|---|---|---|---|
| 55 | 5VX–2117B–A1 | ETIQUETA DE ADVERTENCIA | 1 | | | | | |
| 56 | 5VX–21843–00 | ESTANCIA 4 | 1 | | | | | |
| 57 | 95827–06010 | TORNILLO | 2 | | | | | |
| 58 | 5VX–22836–00 | SOPORTE 3 | 1 | | | | | |
| 59 | 90464–14001 | BRIDA | 1 | | | | | |
| 60 | 95827–06010 | TORNILLO | 2 | | | | | |
| 61 | 4P5–2175V–00 | SOSTEN 3 | 1 | | | | | |
| 62 | 5VX–21779–00 | AMORTIGUADOR DE UBICACION 2 | 1 | | | | | |
| 63 | 5VX–2173M–00 | SELLO 3 | 1 | | | | | |
| 64 | 4P5–21228–00 | SOPORTE, TANQUE DE RESERVA | 1 | | | | | |
| 65 | 90480–13163 | TAPON | 2 | | | | | |
| 66 | 90560–06201 | SEPARADOR | 1 | | | | | |
| 67 | 95807–06016 | TORNILLO | 1 | | | | | |
| 68 | 95827–06010 | TORNILLO | 6 | | | | | |
| 69 | 4S8–2119V–00 | SOPORTE | 1 | | | | | |
| 70 | 95827–08025 | TORNILLO | 1 | | | | | |

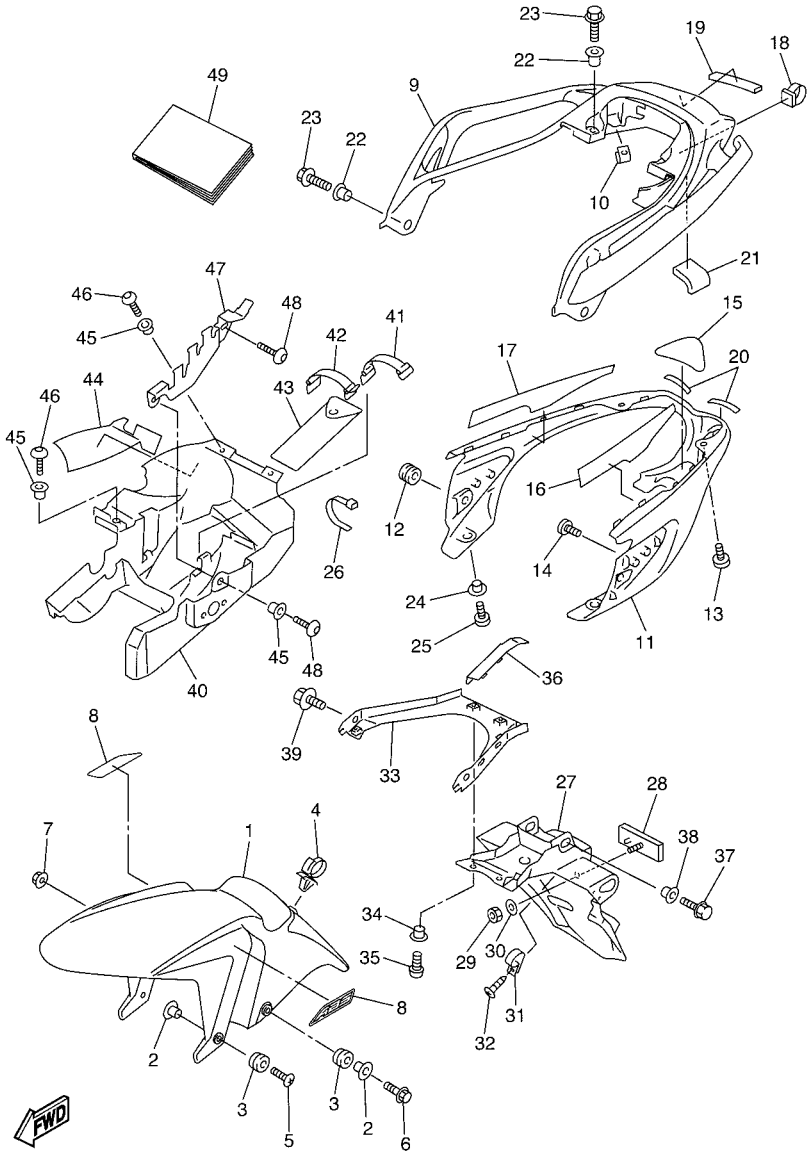


## FIG. 21 GUARDABARRO

| REF. Nº | CODIGO Nº | DESCRIPCION | 5S42 | | | | | OBSERVACIONES |
|---|---|---|---|---|---|---|---|---|
| 1 | 4S8–21511–00–P0 | GUARDABARRO DELANTERO | 1 | | | | | UR PARA SMX |
| | 4S8–21511–00–P6 | GUARDABARRO DELANTERO | 1 | | | | | UR PARA SM1 |
| | 4S8–21511–00–P5 | GUARDABARRO DELANTERO | 1 | | | | | UR PARA BWC1 |
| 2 | 90387–065J6 | ESPACIADOR | 4 | | | | | |
| 3 | 90480–12072 | TAPON | 4 | | | | | |
| 4 | 90464–18002 | BRIDA | 1 | | | | | |
| 5 | 90154–06061 | TORNILLO DE LIGAR | 2 | | | | | |
| 6 | 90109–06031 | PERNO | 2 | | | | | |
| 7 | 90179–06403 | TUERCA | 2 | | | | | |
| 8 | 5VS–21578–10 | EMBLEMA | 2 | | | | | UR PARA SMX,BWC1 |
| | 5VS–21578–20 | EMBLEMA | 2 | | | | | UR PARA SM1 |
| 9 | 5VX–24773–00–P3 | MANIJA DE ASIENTO | 1 | | | | | MBL2 |
| 10 | 90183–05061 | TUERCA DE RESORTE | 2 | | | | | |
| 11 | 5VX–21651–00 | TAPA DE GUARDABARRO TRAS. | 1 | | | | | |
| 12 | 90480–13398 | TAPON | 2 | | | | | |
| 13 | 98907–05012 | TORNILLO DE LIGAR | 2 | | | | | |
| 14 | 97707–50012 | TORNILLO | 2 | | | | | |
| 15 | 5VX–21669–00 | SELLO | 1 | | | | | |
| 16 | 5VX–21732–00 | SELLO 1 | 1 | | | | | |
| 17 | 5VX–21735–01 | SELLO 2 | 1 | | | | | |
| 18 | 90464–14002 | BRIDA | 1 | | | | | |
| 19 | 5VX–88158–00 | AMORTIGUADOR | 1 | | | | | |
| 20 | 5VX–21639–00 | AMORTIGUADOR 2 | 2 | | | | | |
| 21 | 31A–28217–00 | AMORTIGUADOR 1 | 1 | | | | | |
| 22 | 90387–09003 | ESPACIADOR | 4 | | | | | |
| 23 | 95827–08025 | TORNILLO | 4 | | | | | |
| 24 | 90387–06107 | ESPACIADOR | 2 | | | | | |

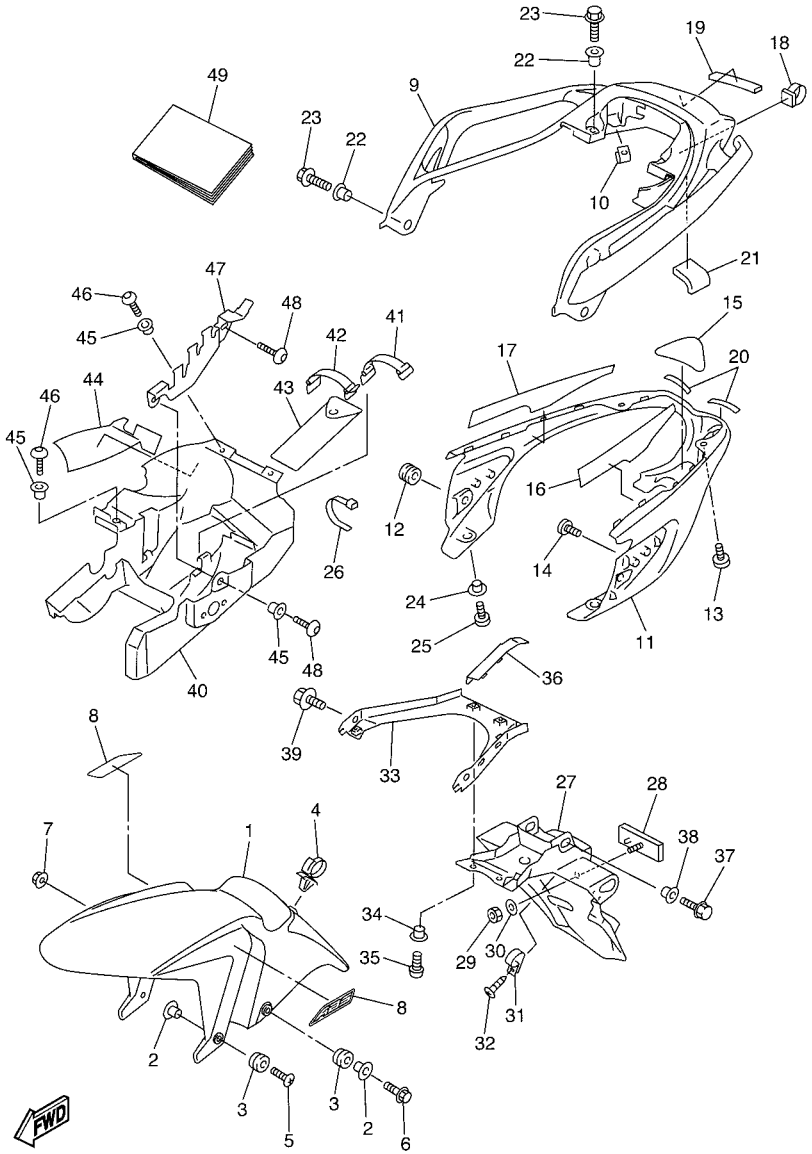


5S21332-F210

## FIG. 21 GUARDABARRO

| REF. Nº | CODIGO Nº | DESCRIPCION | 5S42 | | | | | OBSERVACIONES |
|---|---|---|---|---|---|---|---|---|
| 25 | 98907–06012 | TORNILLO DE LIGAR | 2 | | | | | |
| 26 | 90465–13152 | BRIDA | 2 | | | | | |
| 27 | 5VX–21621–00 | CHARNELA | 1 | | | | | |
| 28 | 3Y6–85130–02 | REFLECTOR TRASERO COMPLETO | 1 | | | | | |
| 29 | 95607–05100 | TUERCA AUTOBLOCANTE | 1 | | | | | |
| 30 | 90201–05725 | ARANDELA PLANA | 1 | | | | | |
| 31 | 90464–18029 | BRIDA | 1 | | | | | |
| 32 | 97707–40012 | TORNILLO ROSCA HEMBRA | 1 | | | | | |
| 33 | 5VX–2161G–00 | SOPORTE 6 | 1 | | | | | |
| 34 | 90387–06107 | ESPACIADOR | 2 | | | | | |
| 35 | 92017–06012 | PERNO | 2 | | | | | |
| 36 | 5VX–21665–00 | GUIA DE GUARDAFANGO | 1 | | | | | |
| 37 | 95827–06016 | TORNILLO | 2 | | | | | |
| 38 | 90387–06075 | ESPACIADOR | 2 | | | | | |
| 39 | 95827–08012 | TORNILLO | 2 | | | | | |
| 40 | 5VX–21629–00 | GUARDABARRO INFERIOR | 1 | | | | | |
| 41 | 3TJ–82131–00 | TIRANTE DE BATERIA | 1 | | | | | |
| 42 | 122–82131–00 | TIRANTE DE BATERIA | 1 | | | | | |
| 43 | 5VX–28100–00 | JUEGO DE HERRAMIENTAS | 1 | | | | | |
| 44 | 5VX–2173N–01 | SELLO 4 | 1 | | | | | |
| 45 | 90387–06107 | ESPACIADOR | 4 | | | | | |
| 46 | 92017–06012 | PERNO | 3 | | | | | |
| 47 | 5VX–2164F–00 | APOYO 1 | 1 | | | | | |
| 48 | 92017–06016 | PERNO | 2 | | | | | |
| 49 | 5S5–F8199–S1 | MANUAL DEL PROPRIETARIO | 1 | | | | | |

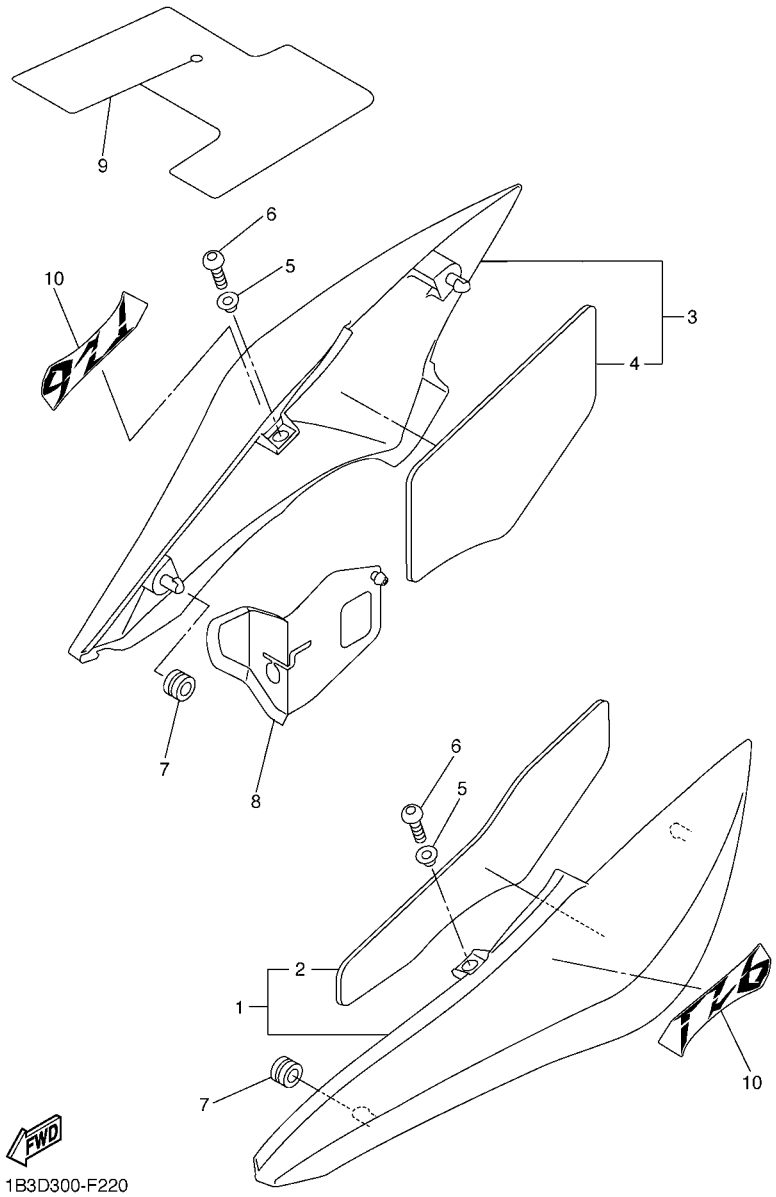


## FIG. 22 CUBIERTA LATERAL

| REF. Nº | CODIGO Nº | DESCRIPCION | 5S42 | | | | | OBSERVACIONES |
|---|---|---|---|---|---|---|---|---|
| 1 | 5VX–21710–10 | CUBIERTA LATERAL COMPLETA 1 | 1 | | | | | |
| 2 | 5VX–2174X–00 | .AMORTIGUADOR | 1 | | | | | |
| 3 | 5VX–21720–10 | CUBIERTA LATERAL COMPLETA 2 | 1 | | | | | |
| 4 | 5VX–2174Y–00 | .AMORTIGUADOR | 1 | | | | | |
| 5 | 90387–06107 | ESPACIADOR | 2 | | | | | |
| 6 | 92017–06014 | PERNO | 2 | | | | | |
| 7 | 90480–01558 | TAPON | 2 | | | | | |
| 8 | 5VX–2163A–00 | CUBIERTA TRAS GUARDABARRO 1 | 1 | | | | | |
| 9 | 5VX–2177F–00 | CHARNELA | 1 | | | | | |
| 10 | 1B3–21781–80 | EMBLEMA 1 | 2 | | | | | UR PARA SMX,BWC1 |
| | 1B3–21781–90 | EMBLEMA 1 | 2 | | | | | UR PARA SM1 |

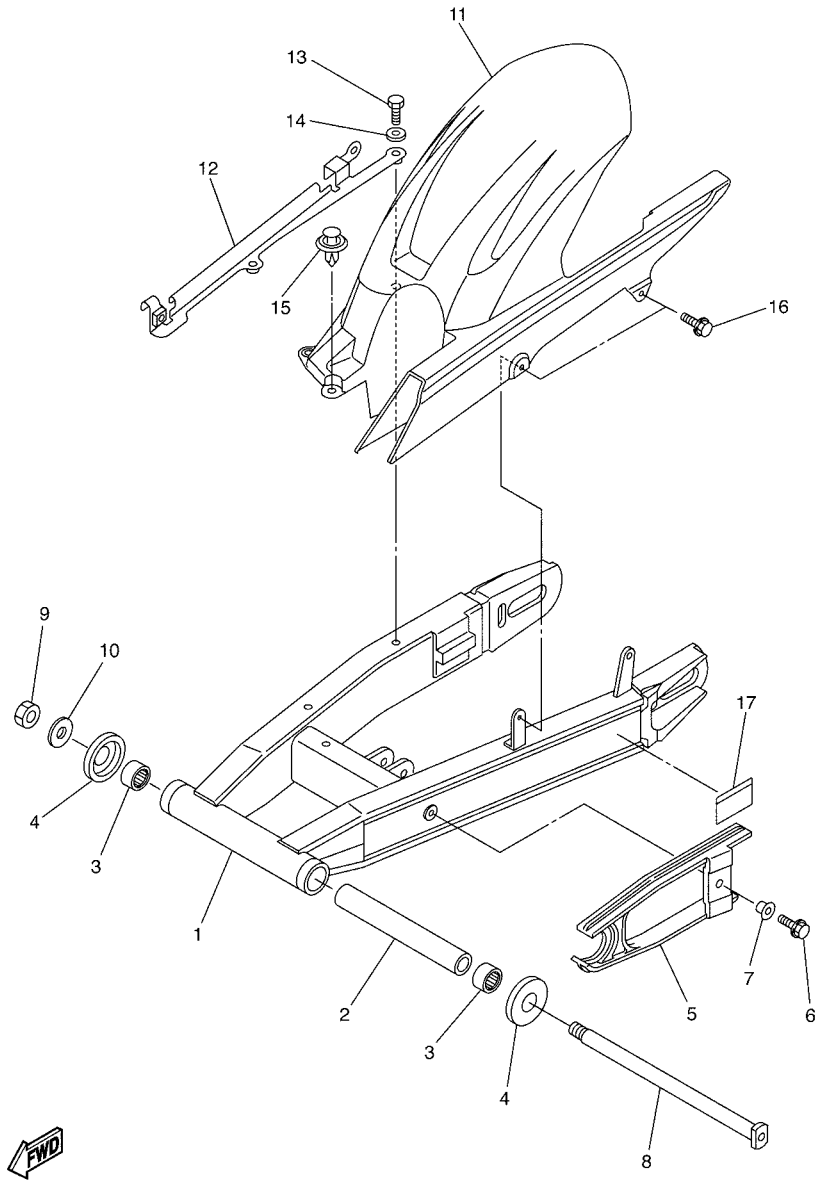


5S21300-F230

## FIG. 23 BRAZO TRASERO

| REF. Nº | CODIGO Nº | DESCRIPCION | 5S42 | | | | | OBSERVACIONES |
|---|---|---|---|---|---|---|---|---|
| 1 | 4S8–22110–00 | BRAZO TRASERO COMPLETO | 1 | | | | | |
| 2 | 5EB–22184–00 | BUJE | 1 | | | | | |
| 3 | 93315–42523 | COJINETE DE RODILLOS | 2 | | | | | |
| 4 | 5JJ–22128–00 | TAPA DE EMPIJE 1 | 2 | | | | | |
| 5 | 5VX–22151–00 | SELLO DE GUARDA | 1 | | | | | |
| 6 | 90119–06096 | TORNILLO CON ARANDELA | 1 | | | | | |
| 7 | 90387–06372 | ESPACIADOR | 1 | | | | | |
| 8 | 4FN–22141–00 | EJE DEL BARCULANTE | 1 | | | | | |
| 9 | 90185–18167 | TUERCA AUTOBLOCANTE | 1 | | | | | |
| 10 | 90201–18020 | ARANDELA PLANA | 1 | | | | | |
| 11 | 5VX–21650–00 | GUARDABARRO TRANSERO COMP. | 1 | | | | | |
| 12 | 4P5–2587A–00 | SOPORTE DE MANGUERA FRENO | 1 | | | | | |
| 13 | 97007–06025 | PERNO | 2 | | | | | |
| 14 | 92907–06600 | ARANDELA | 2 | | | | | |
| 15 | 90269–08001 | REMACHE | 1 | | | | | |
| 16 | 90119–06117 | TORNILLO CON ARANDELA | 2 | | | | | |
| 17 | 3XW–21668–A1 | ETIQUETA DE FRANJA | 1 | | | | | |

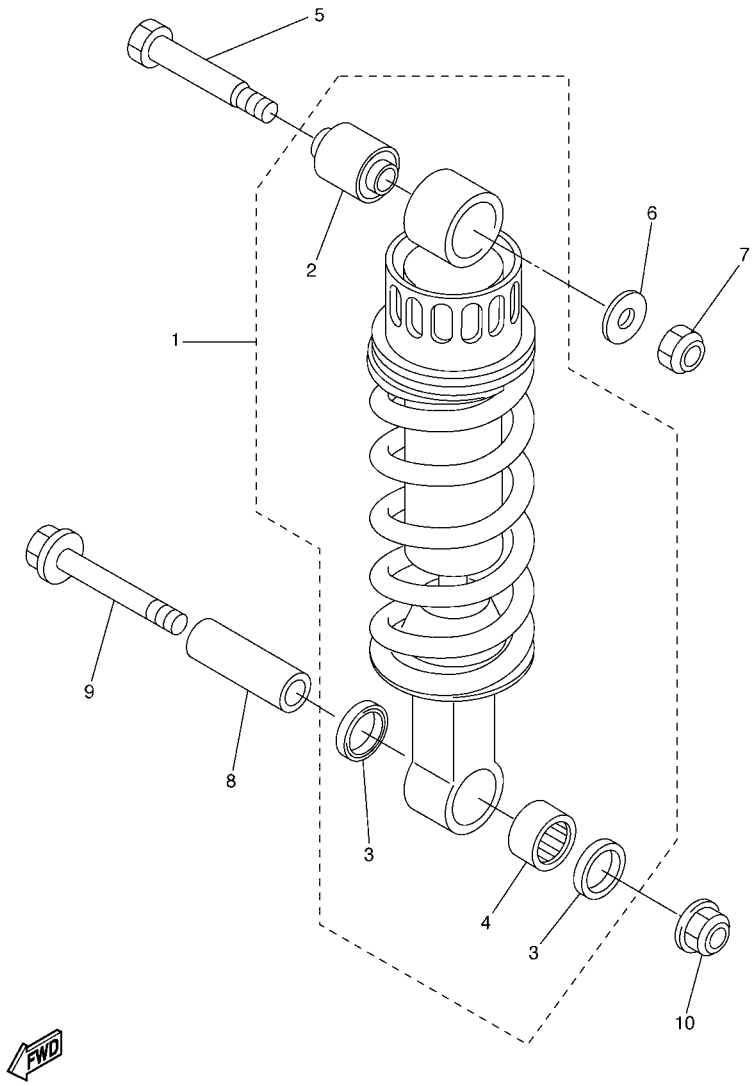


5VX1351-C240

## FIG. 24 SUSPENSION TRASERO

| REF. Nº | CODIGO Nº | DESCRIPCION | 5S42 | | | | | OBSERVACIONES |
|---|---|---|---|---|---|---|---|---|
| 1 | 5VX–22210–00 | AMORTIGUADOR TRASERO COMPLETO | 1 | | | | | |
| 2 | 34L–22216–00 | .BUJE DEL AMORTIGUADOR TRASERO | 1 | | | | | |
| 3 | 93109–17071 | .SELLO ACEITE | 2 | | | | | |
| 4 | 93315–31758 | .COJINETE DE RODILLOS | 1 | | | | | |
| 5 | 90109–10654 | PERNO | 1 | | | | | |
| 6 | 90201–101J1 | ARANDELA PLANA | 1 | | | | | |
| 7 | 95607–10100 | TUERCA AUTOBLOCANTE | 1 | | | | | |
| 8 | 90387–1012B | ESPACIADOR | 1 | | | | | |
| 9 | 90105–10323 | TORNILLO | 1 | | | | | |
| 10 | 95607–10200 | TUERCA DE AUTO-CIERRE | 1 | | | | | |

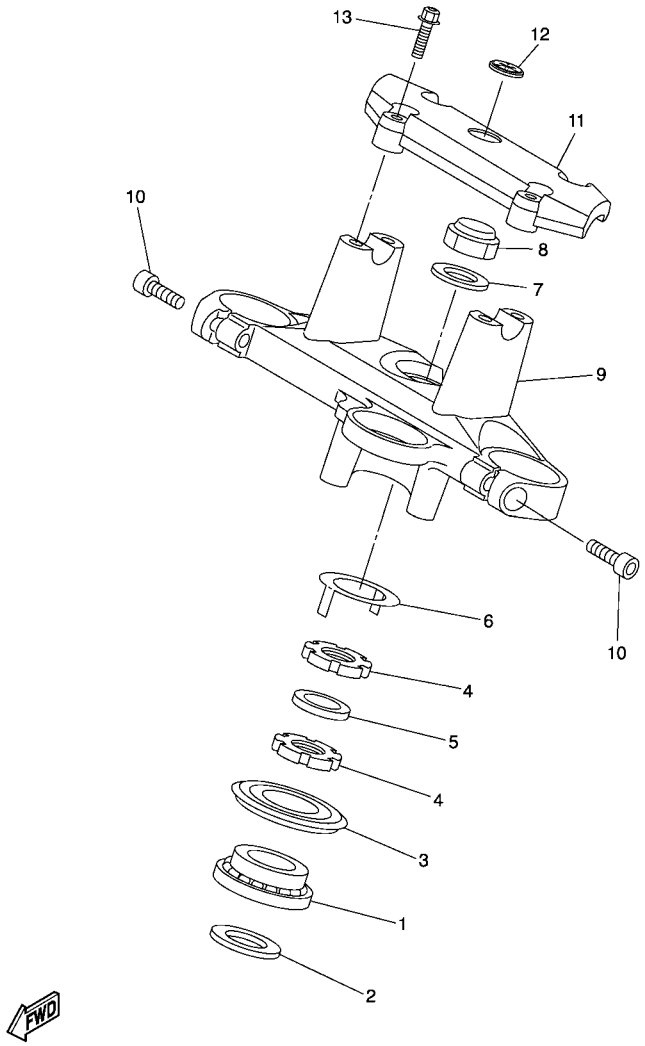


5S51300-F250

## FIG. 25 DIRECCION

| REF. Nº | CODIGO Nº | DESCRIPCION | 5S42 | | | | | OBSERVACIONES |
|---|---|---|---|---|---|---|---|---|
| 1 | 93399–99931 | COJINETE | 1 | | | | | |
| 2 | 90202–24190 | ARANDELA DE PLANA | 1 | | | | | |
| 3 | 5VX–23415–00 | CUBIERTA DE PISTA DE BOLAS 1 | 1 | | | | | |
| 4 | 90179–25033 | TUERCA | 2 | | | | | |
| 5 | 90202–26142 | ARANDELA DE PLANA | 1 | | | | | |
| 6 | 26H–23418–01 | ARANDELA ESPECIAL | 1 | | | | | |
| 7 | 90201–220T0 | ARANDELA PLANA | 1 | | | | | |
| 8 | 90176–22081 | TUERCA CORONA | 1 | | | | | |
| 9 | 1B3–23435–10 | PLATINA SUPERIOR | 1 | | | | | |
| 10 | 91314–08030 | PERNO | 2 | | | | | |
| 11 | 4S8–23441–00 | SOPORTE DE MANUBRIO | 1 | | | | | |
| 12 | 4XV–2341B–00 | EMBLEMA | 1 | | | | | |
| 13 | 95024–08035 | PERNO, DE BRIDA | 4 | | | | | |

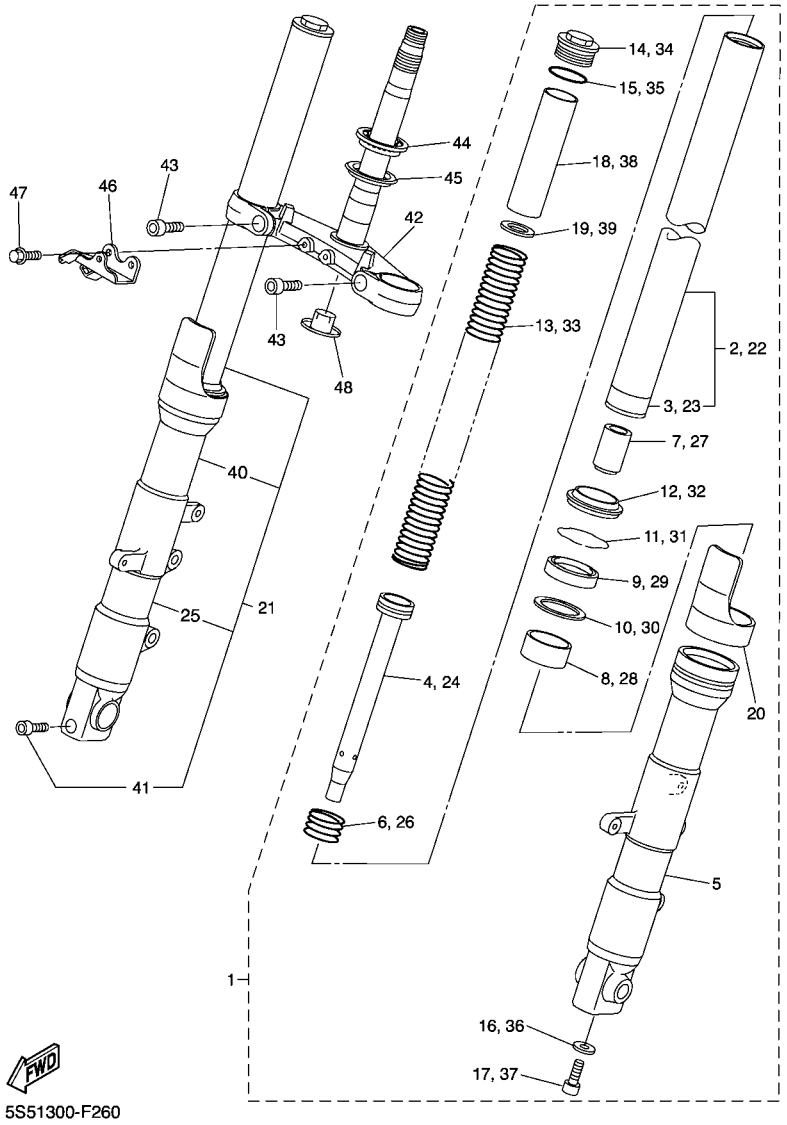


## FIG. 26 HORQUILLA DELANTERA

| REF. Nº | CODIGO Nº | DESCRIPCION | 5S42 | | | | | OBSERVACIONES |
|---|---|---|---|---|---|---|---|---|
| 1 | 4S8–23102–00 | HORQUILLA DELANTERA COMPL.(MI) | 1 | | | | | |
| 2 | 4S8–23110–00 | .TUBO INTERIOR COMPLETO 1 | 1 | | | | | |
| 3 | 4TX–23135–B0 | ..METAL CORREDIZO 2 | 1 | | | | | |
| 4 | 5VX–23170–00 | .CILINDRO COMPL DE HORQ DELANT | 1 | | | | | |
| 5 | 4S8–23126–00 | .TUBO EXTERIOR (IZQUIERDO) | 1 | | | | | |
| 6 | 4TX–23151–00 | .RESORTE DE REBOTE | 1 | | | | | |
| 7 | 4TX–23173–00 | .VASTAGO AHUSADO | 1 | | | | | |
| 8 | 4TX–23125–B0 | .METAL CORREDIZO 1 | 1 | | | | | |
| 9 | 5VX–23145–00 | .RETEN DE ACEITE | 1 | | | | | |
| 10 | 4TX–23115–00 | .GUIA DE CUBIERTA SUPERIOR | 1 | | | | | |
| 11 | 4TX–23156–00 | .PRESILLA DEL RETEN DE ACEITE | 1 | | | | | |
| 12 | 4TX–23144–00 | .GUARDAPOLVO | 1 | | | | | |
| 13 | 5VX–23141–00 | .RESORTE HORQUILLA DELANT. | 1 | | | | | |
| 14 | 5VX–2311H–00 | .PERNO | 1 | | | | | |
| 15 | 93210–34504 | .ANILLO O | 1 | | | | | |
| 16 | 90430–10171 | .JUNTA | 1 | | | | | |
| 17 | 90110–10N52 | .TORNILLO ALLEN | 1 | | | | | |
| 18 | 5VX–23118–00 | .SEPARADOR | 1 | | | | | |
| 19 | 4S8–23142–00 | .ASIENTO DEL MUELLE SUPERIOR | 1 | | | | | |
| 20 | 4TX–2331G–00 | .CUBIERTA | 1 | | | | | |
| 21 | 4S8–23103–00 | HORQUILLA DELANTERA COMPL.(MD) | 1 | | | | | |
| 22 | 4S8–23110–00 | .TUBO INTERIOR COMPLETO 1 | 1 | | | | | |
| 23 | 4TX–23135–B0 | ..METAL CORREDIZO 2 | 1 | | | | | |
| 24 | 5VX–23170–00 | .CILINDRO COMPL DE HORQ DELANT | 1 | | | | | |
| 25 | 4S8–23136–00 | .TUBO EXTERIOR | 1 | | | | | |
| 26 | 4TX–23151–00 | .RESORTE DE REBOTE | 1 | | | | | |
| 27 | 4TX–23173–00 | .VASTAGO AHUSADO | 1 | | | | | |

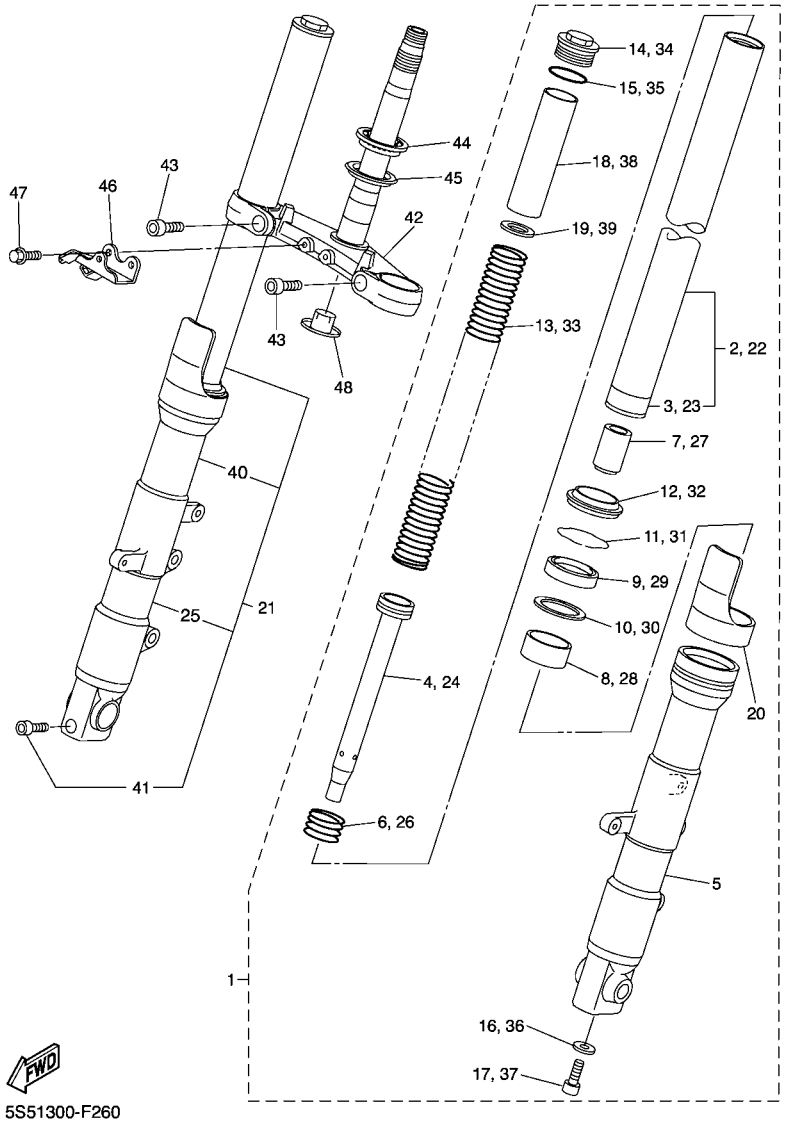


## FIG. 26 HORQUILLA DELANTERA

| REF. Nº | CODIGO Nº | DESCRIPCION | 5S42 | | | | | OBSERVACIONES |
|---|---|---|---|---|---|---|---|---|
| 28 | 4TX–23125–B0 | .METAL CORREDIZO 1 | 1 | | | | | |
| 29 | 5VX–23145–00 | .RETEN DE ACEITE | 1 | | | | | |
| 30 | 4TX–23115–00 | .GUIA DE CUBIERTA SUPERIOR | 1 | | | | | |
| 31 | 4TX–23156–00 | .PRESILLA DEL RETEN DE ACEITE | 1 | | | | | |
| 32 | 4TX–23144–00 | .GUARDAPOLVO | 1 | | | | | |
| 33 | 5VX–23141–00 | .RESORTE HORQUILLA DELANT. | 1 | | | | | |
| 34 | 5VX–2311H–00 | .PERNO | 1 | | | | | |
| 35 | 93210–34504 | .ANILLO O | 1 | | | | | |
| 36 | 90430–10171 | .JUNTA | 1 | | | | | |
| 37 | 90110–10N52 | .TORNILLO ALLEN | 1 | | | | | |
| 38 | 5VX–23118–00 | .SEPARADOR | 1 | | | | | |
| 39 | 4S8–23142–00 | .ASIENTO DEL MUELLE SUPERIOR | 1 | | | | | |
| 40 | 4TX–2331G–00 | .CUBIERTA | 1 | | | | | |
| 41 | 91314–08045 | .PERNO | 1 | | | | | |
| 42 | 5VX–23340–00 | PLATINA INFERIOR COMPLETA | 1 | | | | | |
| 43 | 91312–10025 | TORNILLO | 2 | | | | | |
| 44 | 93399–99932 | COJINETE | 1 | | | | | |
| 45 | 3FV–23462–00 | RETEN DE DIRECCION | 1 | | | | | |
| 46 | 1B3–23327–10 | SOPORTE DE DESTELLADOR 1 | 1 | | | | | |
| 47 | 95817–06012 | TORNILLO | 2 | | | | | |
| 48 | 4KM–23123–01 | CUBIERTA INFERIOR 1 | 1 | | | | | |

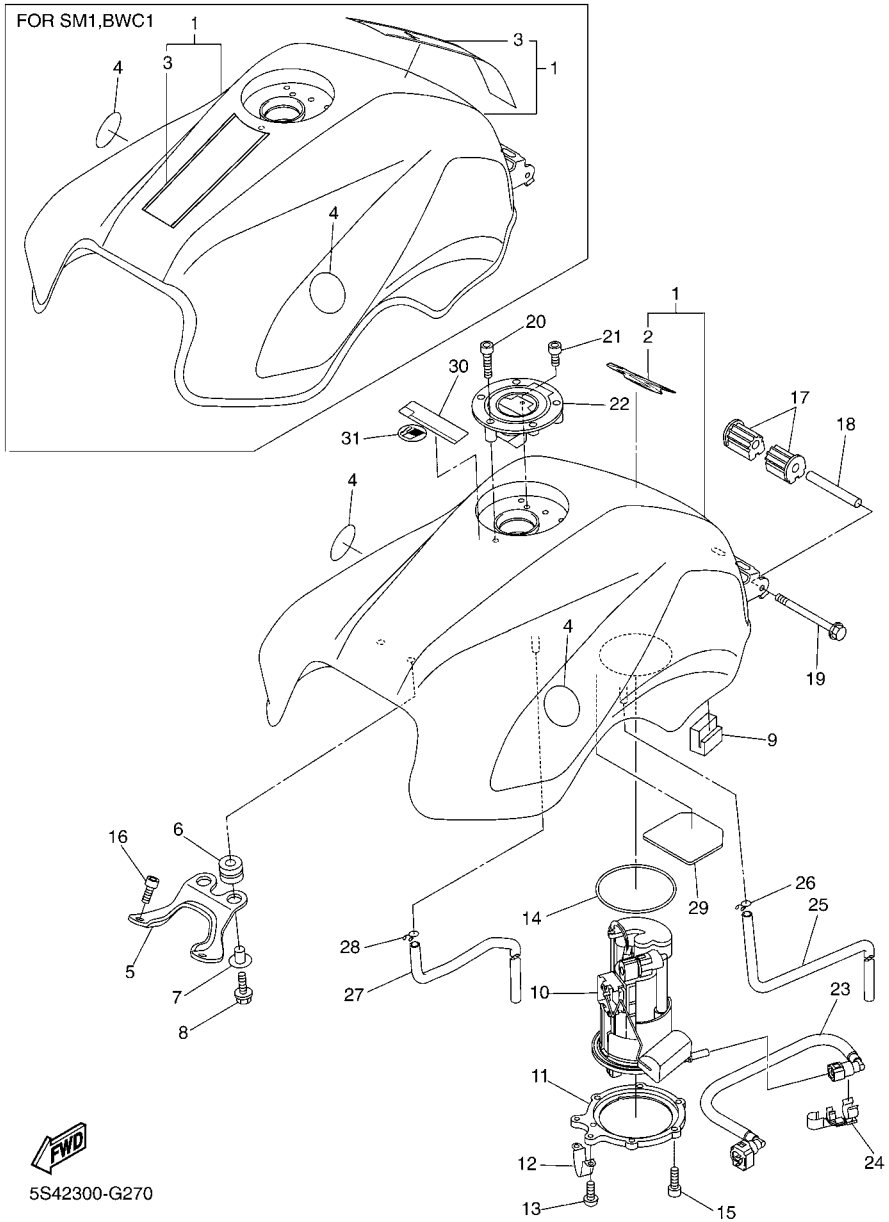


## FIG. 27 DEPOSITO DE COMBUSTIBLE

| REF. Nº | CODIGO Nº | DESCRIPCION | 5S42 | | | | | OBSERVACIONES |
|---|---|---|---|---|---|---|---|---|
| 1 | 5VX–Y2410–30–X3 | DEPOSITO DE COMBUSTIBLE COMP. | 1 | | | | | UR PARA SMX |
| | 5VX–Y2410–30–W1 | DEPOSITO DE COMBUSTIBLE COMP. | 1 | | | | | UR PARA SM1 |
| | 5VX–Y2410–30–W2 | DEPOSITO DE COMBUSTIBLE COMP. | 1 | | | | | UR PARA BWC1 |
| 2 | 4S8–24161–00 | .EMBLEMA 1 | 1 | | | | | PARA SMX |
| 3 | 5S5–24230–00 | .JUEGO DE CALCOMANIAS | 1 | | | | | UR PARA SM1 |
| | 5S5–24230–10 | .JUEGO DE CALCOMANIAS | 1 | | | | | UR PARA BWC1 |
| 4 | 5SL–2413B–00 | EMBLEMA | 2 | | | | | |
| 5 | 5VX–24191–00 | SOPORTE DEPOSITO DE COMBUST.1 | 1 | | | | | |
| 6 | 90480–15005 | TAPON | 2 | | | | | |
| 7 | 90387–06068 | ESPACIADOR | 2 | | | | | |
| 8 | 90119–06062 | TORNILLO CON ARANDELA | 2 | | | | | |
| 9 | 5VX–24183–00 | AMORTIGUADOR DE MONTAJE 3 | 2 | | | | | |
| 10 | 5VX–13907–01 | BOMBA DE COMBUSTIBLE COMPLETA | 1 | | | | | |
| 11 | 5SL–24491–00 | SOPORTE BOMBA COMBUSTIBLE | 1 | | | | | |
| 12 | 5PW–24192–00 | SOPORTE DE DEPOSITO COMBUST.2 | 1 | | | | | |
| 13 | 98907–05008 | TORNILLO DE LIGAR | 2 | | | | | |
| 14 | 5JW–24486–00 | ANILLO O | 1 | | | | | |
| 15 | 90110–05014 | TORNILLO ALLEN | 6 | | | | | |
| 16 | 90110–06079 | TORNILLO ALLEN | 2 | | | | | |
| 17 | 5VX–24181–00 | AMORTIGUADOR DE MONTAJE 1 | 2 | | | | | |
| 18 | 90387–061W6 | ESPACIADOR | 1 | | | | | |
| 19 | 95827–06090 | TORNILLO | 1 | | | | | |
| 20 | 90110–05112 | TORNILLO ALLEN | 3 | | | | | |
| 21 | 91317–05010 | PERNO | 1 | | | | | |
| 22 | 5JJ–24602–00 | TAPON COMPLETO | 1 | | | | | |
| 23 | 5VX–13971–00 | ANILLO DE ESPACIADOR | 1 | | | | | |
| 24 | 90464–16005 | BRIDA | 1 | | | | | |

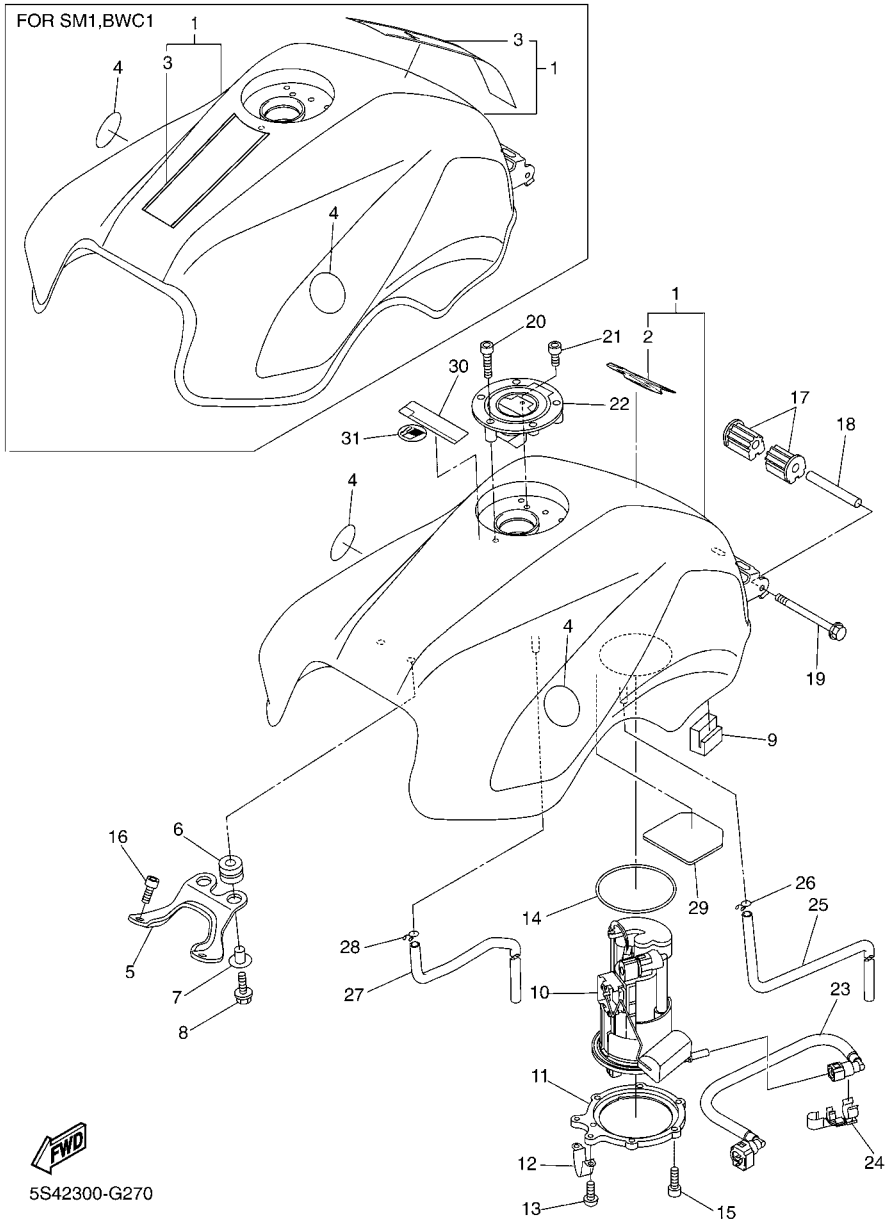


## FIG. 27 DEPOSITO DE COMBUSTIBLE

| REF. Nº | CODIGO Nº | DESCRIPCION | 5S42 | | | | | OBSERVACIONES |
|---|---|---|---|---|---|---|---|---|
| 25 | 90445–10033 | TUBO | 1 | | | | | |
| 26 | 90467–10008 | PRESILLA | 1 | | | | | |
| 27 | 90445–10032 | TUBO | 1 | | | | | |
| 28 | 90467–10008 | PRESILLA | 1 | | | | | |
| 29 | 5VX–24141–00 | PROTECTOR DEPOSITO COMBUST. | 1 | | | | | |
| 30 | 5PA–21568–00 | ETIQUETA DE PRECAUCION | 1 | | | | | |
| 31 | 3ME–2415E–01 | EMBLEMA DE PRECAUCTON | 1 | | | | | |

## FIG. 28 ASIENTO

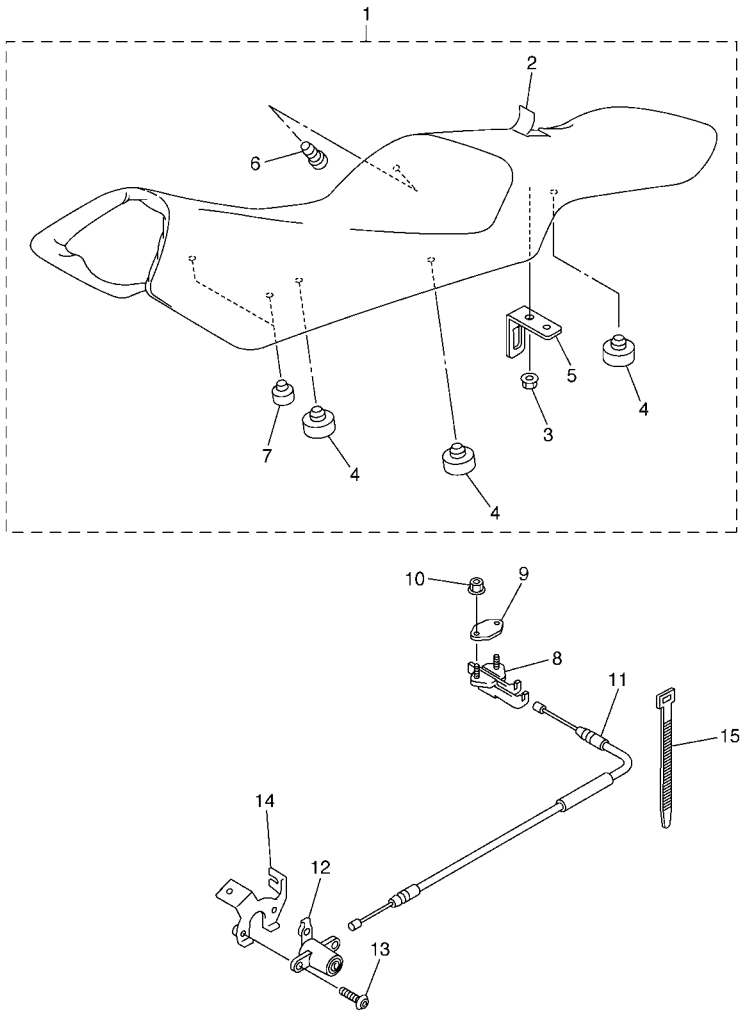


5VX1351-C280

| REF. Nº | CODIGO Nº | DESCRIPCION | 5S42 | | | | | OBSERVACIONES |
|---|---|---|---|---|---|---|---|---|
| 1 | 4S8–24730–10 | SILLIN DOBLE COMPLETO | 1 | | | | | |
| 2 | 4S8–2470F–10 | .FUNDADE SILLIN | 1 | | | | | |
| 3 | 95602–06200 | .TUERCA DE AUTO-CIERRE | 1 | | | | | |
| 4 | 371–27114–00 | .TOPE DE PUNTAL PRINCIPAL | 6 | | | | | |
| 5 | 4NK–24728–00 | .SOPORTE DE ASIENTO | 1 | | | | | |
| 6 | 90338–06018 | .TAPON | 1 | | | | | |
| 7 | 5VX–24724–00 | .AMORTIGUADOR DE ASIENTO | 2 | | | | | |
| 8 | 4BP–24780–00 | CERRADURA SILLIN COMPLETO | 1 | | | | | |
| 9 | 4BP–24792–00 | PLACA | 1 | | | | | |
| 10 | 95707–06500 | TUERCA DE BRIDA | 2 | | | | | |
| 11 | 5VX–2478E–00 | CABLE | 1 | | | | | |
| 12 | 2TV–W2470–00 | JUEGO DE ROTOR | 1 | | | | | |
| 13 | 90149–06308 | TORNILLO DE REGLAJE | 2 | | | | | |
| 14 | 5PW–2117K–00 | SOPORTE DE CERRADURA | 1 | | | | | |
| 15 | 90464–16061 | BRIDA | 1 | | | | | |

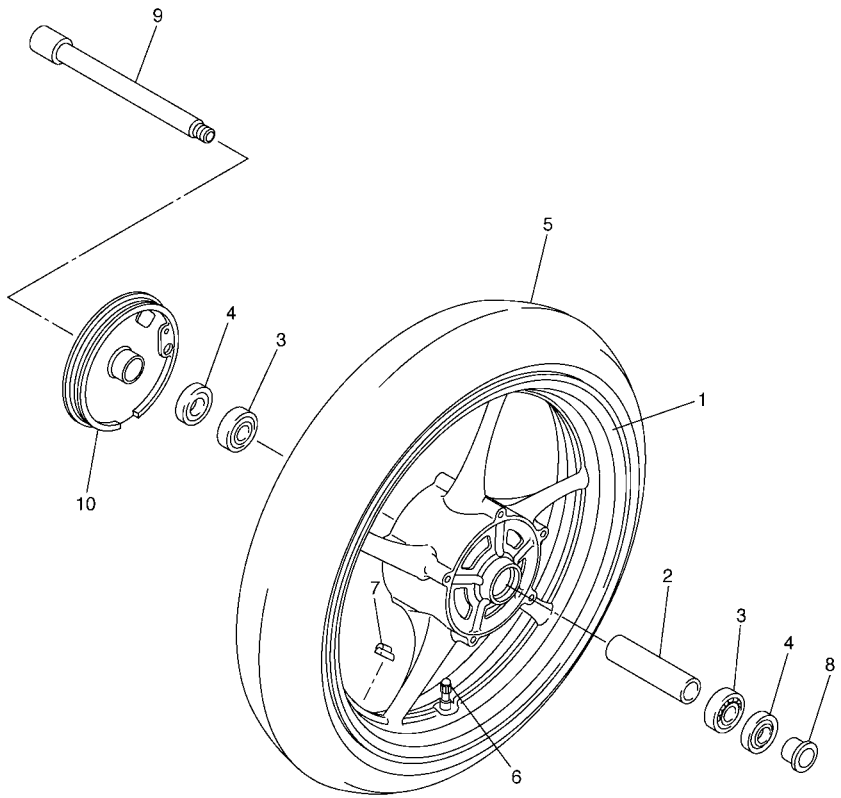

4P51300-E290

## FIG. 29 RUEDA DELANTERA

| REF. Nº | CODIGO Nº | DESCRIPCION | 5S42 | | | | | OBSERVACIONES |
|---|---|---|---|---|---|---|---|---|
| 1 | 4P5–W2516–00–0X | RUEDA FUNDIDA DELANTERA | 1 | | | | | PARA SMX,BWC1 |
| | 4P5–W2516–00–98 | RUEDA FUNDIDA DELANTERA | 1 | | | | | PARA SM1 |
| 2 | 5EA–25117–00 | ESPACIADOR DE COJINETE | 1 | | | | | |
| 3 | 93306–00420 | COJINETE | 2 | | | | | |
| 4 | 93106–28043 | SELLO ACEITE | 2 | | | | | |
| 5 | 94112–17066 | NEUMATICO (120/70ZR17M/C 58W) | 1 | | | | | UR BRIDGESTONE |
| | 94112–17067 | NEUMATICO (120/70ZR17M/C 58W) | 1 | | | | | UR DUNLOP |
| 6 | 93900–00030 | VALVULA DE ARO (TR412) | 1 | | | | | TAIHEIYO |
| 7 | 5MT–25398–00 | BALANCEADOR DE RUEDA (10G) | 1 | | | | | UR |
| | 5MT–25398–10 | BALANCEADOR DE RUEDA (20G) | 1 | | | | | UR |
| | 5MT–25398–20 | BALANCEADOR DE RUEDA (30G) | 1 | | | | | UR |
| 8 | 90387–22002 | ESPACIADOR | 1 | | | | | |
| 9 | 4XV–25181–10 | EJE DE LA RUEDA | 1 | | | | | |
| 10 | 4P5–2517A–00–98 | CAJA DE SENSOR | 1 | | | | | LGB |

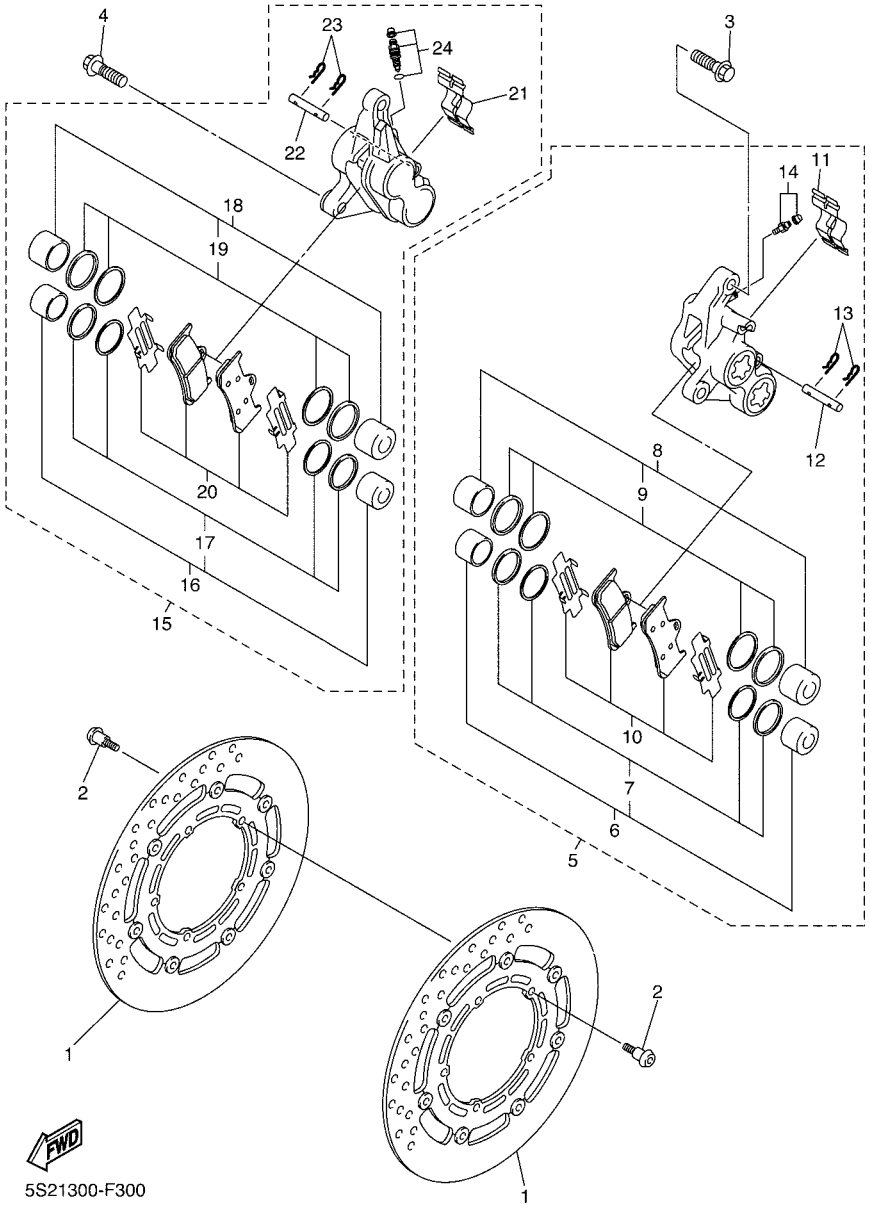


## FIG. 30 CALIBRE FRENO DELANTERA

| REF. Nº | CODIGO Nº | DESCRIPCION | 5S42 | | | | | OBSERVACIONES |
|---|---|---|---|---|---|---|---|---|
| 1 | 5VX–2581T–01 | DISCO DE FRENO | 2 | | | | | |
| 2 | 90109–064G6 | PERNO | 10 | | | | | |
| 3 | 90105–10638 | TORNILLO | 2 | | | | | |
| 4 | 90105–10638 | TORNILLO | 2 | | | | | |
| 5 | 4S8–2580T–00 | CALIBRE COMPLETO (IZQUIERDO) | 1 | | | | | |
| 6 | 4SV–W0057–00 | .PISTON COMPLETO PINZA | 1 | | | | | |
| 7 | 3MA–W0047–10 | ..JUEGO DE RETENES DE PINZA | 1 | | | | | |
| 8 | 4SV–W0057–10 | .PISTON COMPLETO PINZA | 1 | | | | | |
| 9 | 3GM–W0047–10 | ..JUEGO DE RETENES DE PINZA | 1 | | | | | |
| 10 | 5VN–W0045–00 | .JUEGO DE COJIN DE FRENO | 1 | | | | | |
| 11 | 4SV–25919–00 | .SOPORTE DE PASTILLAS | 1 | | | | | |
| 12 | 4SV–25924–00 | .PASADOR | 1 | | | | | |
| 13 | 3GM–25925–00 | .PRESILLA | 2 | | | | | |
| 14 | 1J3–W0048–00 | .CJTO TORNILLO DE PURGA | 1 | | | | | |
| 15 | 5S2–2580U–00 | CALIBRE COMPLETO (DERECHO) | 1 | | | | | |
| 16 | 4SV–W0057–00 | .PISTON COMPLETO PINZA | 1 | | | | | |
| 17 | 3MA–W0047–10 | ..JUEGO DE RETENES DE PINZA | 1 | | | | | |
| 18 | 4SV–W0057–10 | .PISTON COMPLETO PINZA | 1 | | | | | |
| 19 | 3GM–W0047–10 | ..JUEGO DE RETENES DE PINZA | 1 | | | | | |
| 20 | 5VN–W0045–00 | .JUEGO DE COJIN DE FRENO | 1 | | | | | |
| 21 | 4SV–25919–00 | .SOPORTE DE PASTILLAS | 1 | | | | | |
| 22 | 4SV–25924–00 | .PASADOR | 1 | | | | | |
| 23 | 3GM–25925–00 | .PRESILLA | 2 | | | | | |
| 24 | 5VS–W0048–00 | .CJTO TORNILLO DE PURGA | 1 | | | | | |

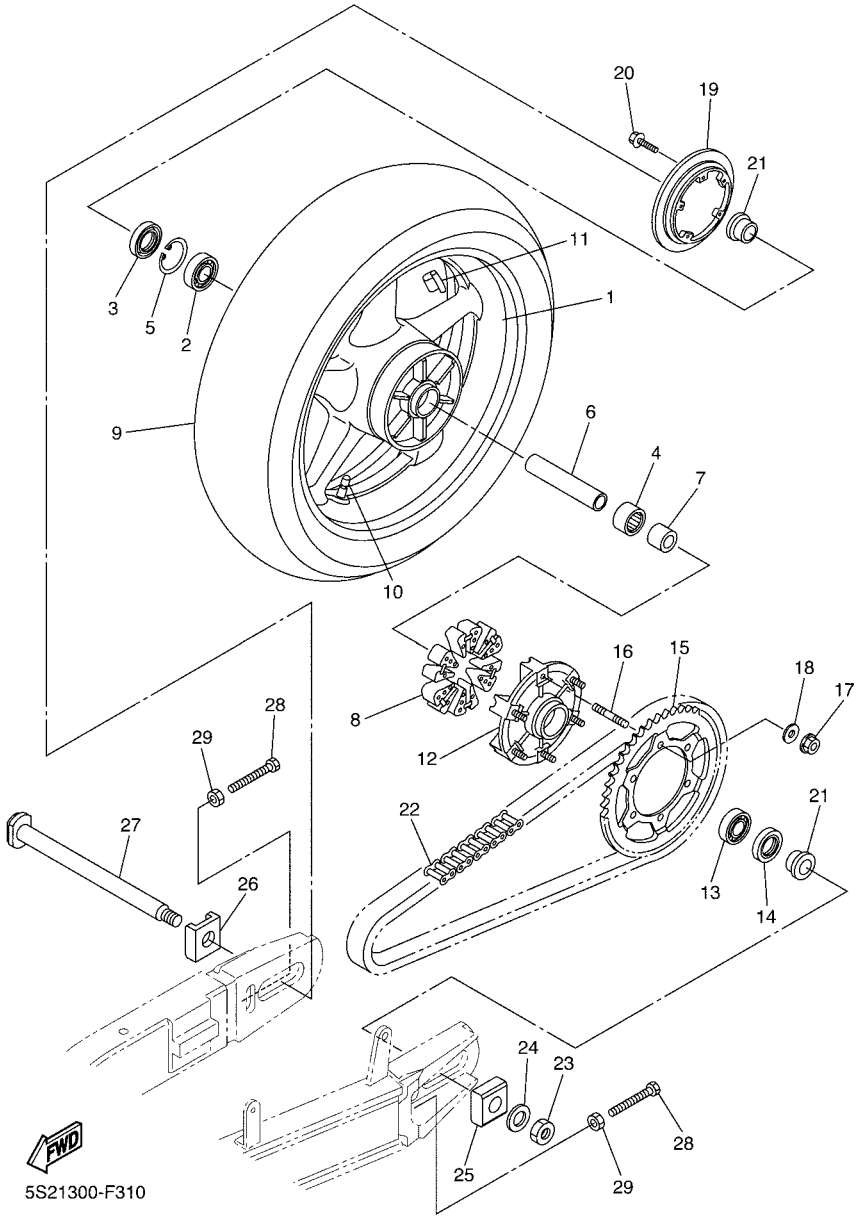


## FIG. 31 RUEDA TRASERA

| REF. Nº | CODIGO Nº | DESCRIPCION | 5S42 | | | | | OBSERVACIONES |
|---|---|---|---|---|---|---|---|---|
| 1 | 4P5–25338–00–0X | RUEDA FUNDIDA TRASERA | 1 | | | | | PARA SMX,BWC1 |
| | 4P5–25338–00–98 | RUEDA FUNDIDA TRASERA | 1 | | | | | PARA SM1 |
| 2 | 93306–20531 | COJINETE | 1 | | | | | |
| 3 | 93106–40013 | SELLO ACEITE | 1 | | | | | |
| 4 | 93317–43580 | COJINETE | 1 | | | | | |
| 5 | 93420–61M07 | SEGURO | 1 | | | | | |
| 6 | 4XV–25317–00 | ESPACIADOR DE COJINETE | 1 | | | | | |
| 7 | 5SL–25383–00 | COLLAR DE RUEDA | 1 | | | | | |
| 8 | 5VX–25364–00 | AMORTIGUADOR | 6 | | | | | |
| 9 | 94118–17041 | NEUMATICO (180/55ZR17 M/C 73W) | 1 | | | | | UR BRIDGESTONE |
| | 94118–17053 | NEUMATICO (180/55ZR17M/C 73W) | 1 | | | | | UR DUNLOP |
| 10 | 93900–00030 | VALVULA DE ARO (TR412) | 1 | | | | | TAIHEIYO |
| 11 | 5MT–25398–00 | BALANCEADOR DE RUEDA (10G) | 1 | | | | | UR |
| | 5MT–25398–10 | BALANCEADOR DE RUEDA (20G) | 1 | | | | | UR |
| | 5MT–25398–20 | BALANCEADOR DE RUEDA (30G) | 1 | | | | | UR |
| 12 | 5SL–25366–00 | EMBRAGUE DE MASA | 1 | | | | | |
| 13 | 93306–20531 | COJINETE | 1 | | | | | |
| 14 | 93106–40013 | SELLO ACEITE | 1 | | | | | |
| 15 | 5VX–25446–01 | CORONA (46T) | 1 | | | | | |
| 16 | 90116–10485 | ESPARRAGO | 6 | | | | | |
| 17 | 90185–10009 | TUERCA AUTOBLOCANTE | 6 | | | | | |
| 18 | 90201–10021 | ARANDELA PLANA | 6 | | | | | |
| 19 | 4P5–2537G–00 | ROTOR DE SENSOR | 1 | | | | | |
| 20 | 90105–05015 | TORNILLO | 5 | | | | | |
| 21 | 90387–28001 | ESPACIADOR | 2 | | | | | |
| 22 | 94582–11118 | CADENA (DID50V4-118LE) | 1 | | | | | |
| 23 | 90185–24007 | TUERCA AUTOBLOCANTE | 1 | | | | | |

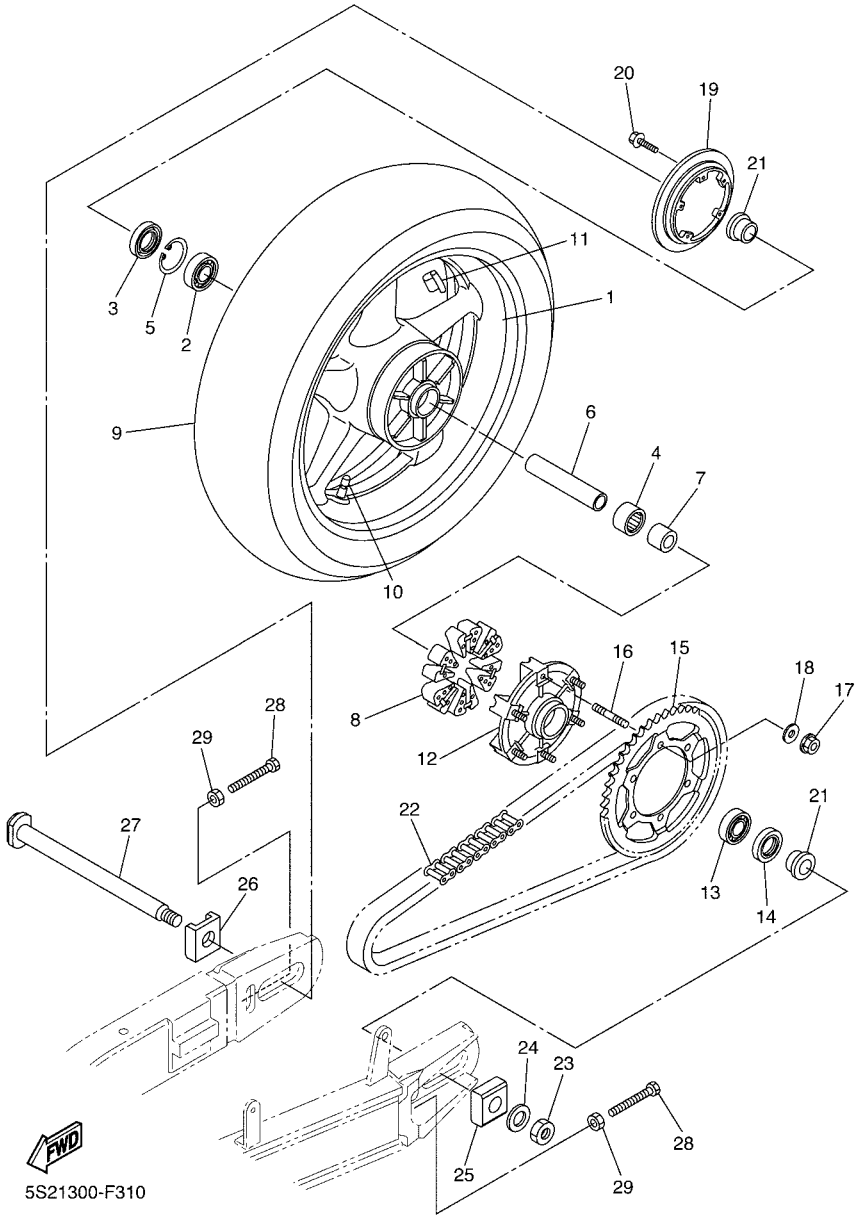


## FIG. 31 RUEDA TRASERA

| REF. Nº | CODIGO Nº | DESCRIPCION | 5S42 | | | | | OBSERVACIONES |
|---|---|---|---|---|---|---|---|---|
| 24 | 90201–25020 | ARANDELA PLANA | 1 | | | | | |
| 25 | 5SL–25388–00 | TIRADOR DE CADENA 1 | 1 | | | | | |
| 26 | 5SL–25389–00 | TIRADOR DE CADENA 2 | 1 | | | | | |
| 27 | 5SL–25381–10 | EJE DE RUEDA | 1 | | | | | |
| 28 | 90101–08013 | TORNILLO | 2 | | | | | |
| 29 | 95302–08600 | TUERCA | 2 | | | | | |

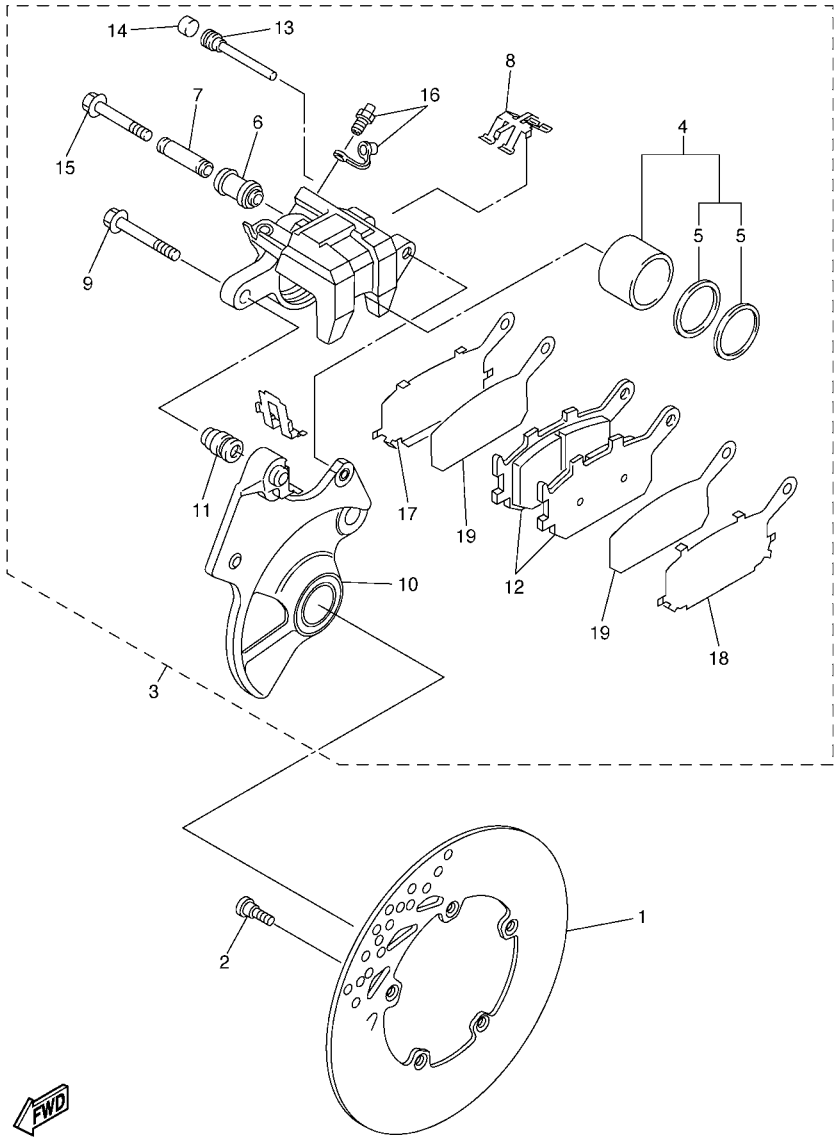


4P53300-F320

## FIG. 32 CALIBRE FRENO TRASERA

| REF. Nº | CODIGO Nº | DESCRIPCION | 5S42 | | | | | OBSERVACIONES |
|---|---|---|---|---|---|---|---|---|
| 1 | 2D1–2582W–00 | DISCO DE FRENO TRASEROS 2 | 1 | | | | | |
| 2 | 90109–08045 | PERNO | 5 | | | | | |
| 3 | 4P5–2580W–00 | CALIBRE COMPLETO TRASEROS 2 | 1 | | | | | |
| 4 | 5SL–W0057–00 | .PISTON COMPLETO PINZA | 1 | | | | | |
| 5 | 5SL–W0047–00 | ..JUEGO DE RETENES DE PINZA | 1 | | | | | |
| 6 | 5SL–25917–00 | .FUNDA DE CALIBRE | 1 | | | | | |
| 7 | 5SL–25838–00 | .CASQUILLO DE CALIBRE | 1 | | | | | |
| 8 | 5SL–25919–00 | .SOPORTE DE PASTILLAS | 1 | | | | | |
| 9 | 5SL–25914–00 | .PASADOR | 1 | | | | | |
| 10 | 4P5–25921–50 | .MENSULA DE SOPORTE | 1 | | | | | |
| 11 | 3JD–25917–00 | .FUNDA DE CALIBRE | 1 | | | | | |
| 12 | 5VX–W0046–00 | .JUEGO DE PASTILLAS DE FRENO 2 | 1 | | | | | |
| 13 | 8CR–25924–00 | .PASADOR | 1 | | | | | |
| 14 | 5DH–25916–00 | .TAPON | 1 | | | | | |
| 15 | 5SL–25926–00 | .PERNO | 1 | | | | | |
| 16 | 8CR–W0048–00 | .CJTO TORNILLO DE PURGA | 1 | | | | | |
| 17 | 5SL–25827–00 | .CUNA DE CALIBRE | 1 | | | | | |
| 18 | 5SL–25827–10 | .CUNA DE CALIBRE | 1 | | | | | |
| 19 | 5SL–25828–00 | .CUNA DE CALIBRE | 2 | | | | | |

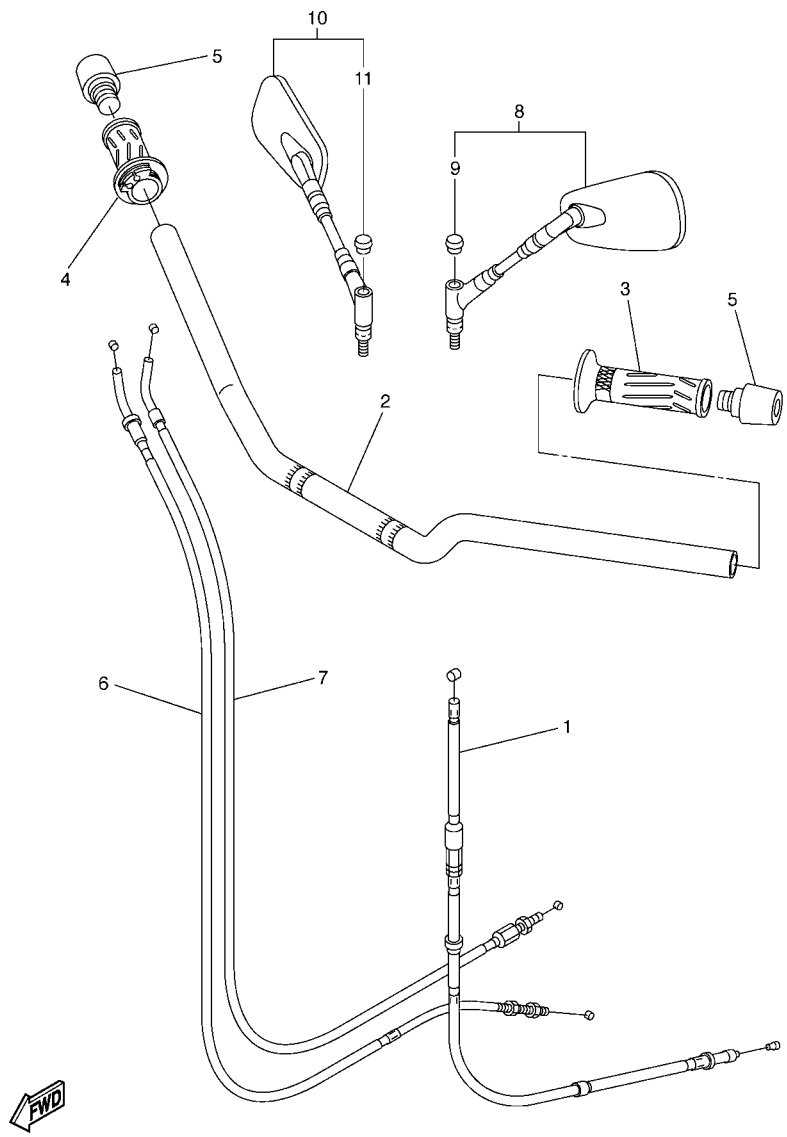


## FIG. 33 MANILLAR & CABLE

| REF. Nº | CODIGO Nº | DESCRIPCION | 5S42 | | | | | OBSERVACIONES |
|---|---|---|---|---|---|---|---|---|
| 1 | 1B3–26335–00 | CABLE DE EMBRAGUE | 1 | | | | | |
| 2 | 1B3–26111–10 | MANUBRIO | 1 | | | | | |
| 3 | 4YR–26241–02 | EMPUNADURA (IZQUIERDO) | 1 | | | | | |
| 4 | 4YR–26240–02 | EMPUNADURA COMPLETA | 1 | | | | | |
| 5 | 51J–26246–01 | EXTREMO DE EMPUNADURA | 2 | | | | | |
| 6 | 1B3–26311–00 | CABLE DE ACELERADOR 1 | 1 | | | | | |
| 7 | 1B3–26312–00 | CABLE DE ACELERADOR 2 | 1 | | | | | |
| 8 | 1B3–26280–10 | ESPEJO COMPLETO (IZQUIERDO) | 1 | | | | | |
| 9 | 5PS–26133–20 | .TAPA | 1 | | | | | |
| 10 | 1B3–26290–10 | ESPEJO COMPLETO (DERECHO) | 1 | | | | | |
| 11 | 5PS–26133–20 | .TAPA | 1 | | | | | |

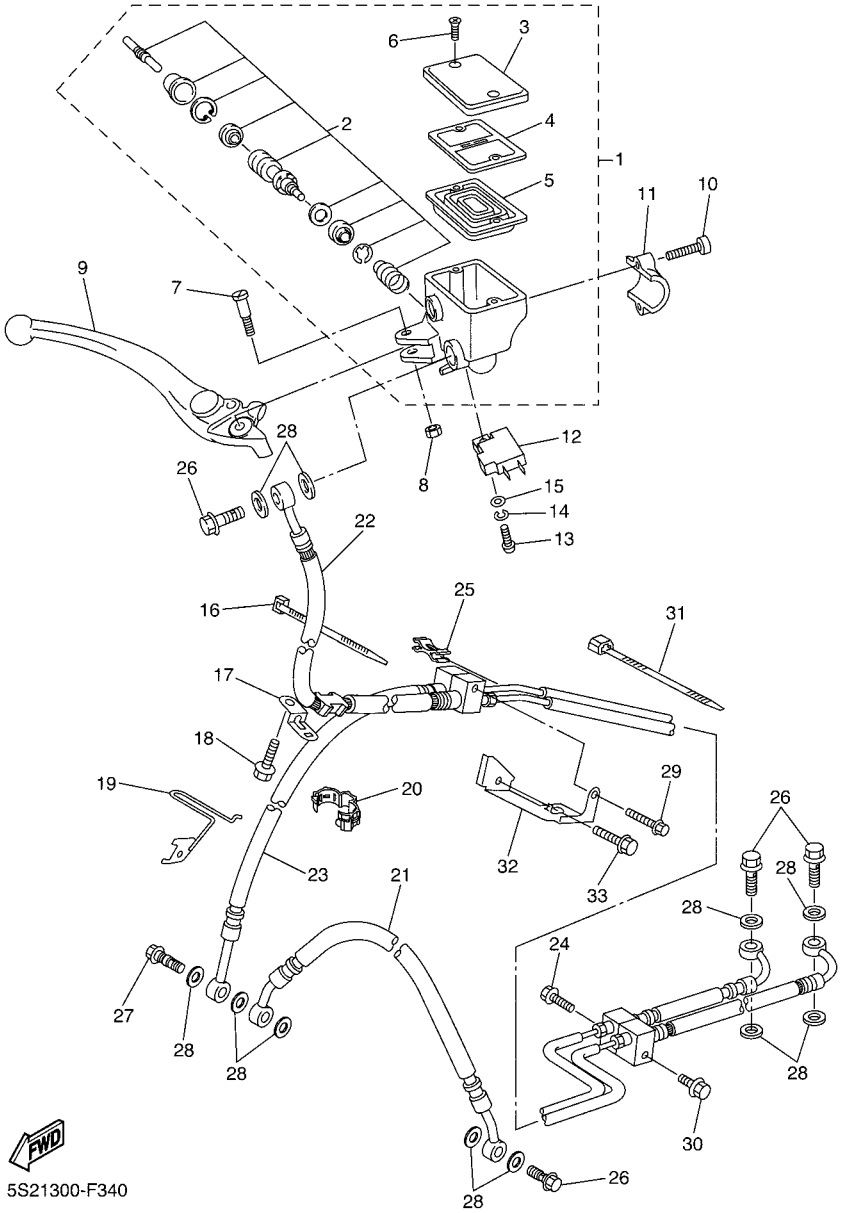


## FIG. 34 CILINDRO MAESTRO DELANTERO

| REF. Nº | CODIGO Nº | DESCRIPCION | 5S42 | | | | | OBSERVACIONES |
|---|---|---|---|---|---|---|---|---|
| 1 | 2B0–W2587–00 | CILINDRO MAESTRO SUB COMPLET | 1 | | | | | |
| 2 | 5VS–W0041–00 | .JUEGO DE CILINDRO MAESTRO | 1 | | | | | |
| 3 | 5VS–25852–00 | .TAPA DE TANQUE DE RESERVA | 1 | | | | | |
| 4 | 5VS–25855–00 | .BUJE DE DIAFRAGMA | 1 | | | | | |
| 5 | 5VS–25854–00 | .DIAFRAGMA TANQUE RESERVA | 1 | | | | | |
| 6 | 5VS–2589H–00 | .TORNILLO | 2 | | | | | |
| 7 | 5VS–2589F–00 | PERNO DE PALANCA | 1 | | | | | |
| 8 | 95617–06100 | TUERCAAUTOBLOCANTE | 1 | | | | | |
| 9 | 5VS–83922–00 | PALANCA 2 | 1 | | | | | |
| 10 | 5VS–26332–00 | PERNO | 2 | | | | | |
| 11 | 5VS–25867–00 | SOPORTE DE CILINDRO MAESTRO | 1 | | | | | |
| 12 | 4HM–83980–00 | INTERRUP. DE PARADA DELANTERO | 1 | | | | | |
| 13 | 98502–04012 | TORNILLO | 1 | | | | | |
| 14 | 92902–04100 | ARANDELA | 1 | | | | | |
| 15 | 92902–04600 | ARANDELA | 1 | | | | | |
| 16 | 1UA–82591–00 | BANDA | 1 | | | | | |
| 17 | 5SL–25876–00 | SOPORTE DE MANGUERA FRENO 2 | 1 | | | | | |
| 18 | 95807–06010 | TORNILLO | 1 | | | | | |
| 19 | 4S8–25876–00 | SOPORTE DE MANGUERA FRENO 2 | 1 | | | | | |
| 20 | 90464–12013 | BRIDA | 1 | | | | | |
| 21 | 5S2–25872–00 | MANGUERA DE FRENO 1 | 1 | | | | | |
| 22 | 4P5–2584B–11 | MANGUERA DE FRENO | 1 | | | | | |
| 23 | 5S2–2584C–00 | MANGUERA DE FRENO | 1 | | | | | |
| 24 | 95027–06020 | PERNO, DE BRIDA | 1 | | | | | |
| 25 | 90464–04003 | BRIDA | 1 | | | | | |
| 26 | 90401–10020 | PERNO DE UNION | 4 | | | | | |
| 27 | 90401–10038 | PERNO DE UNION | 1 | | | | | |

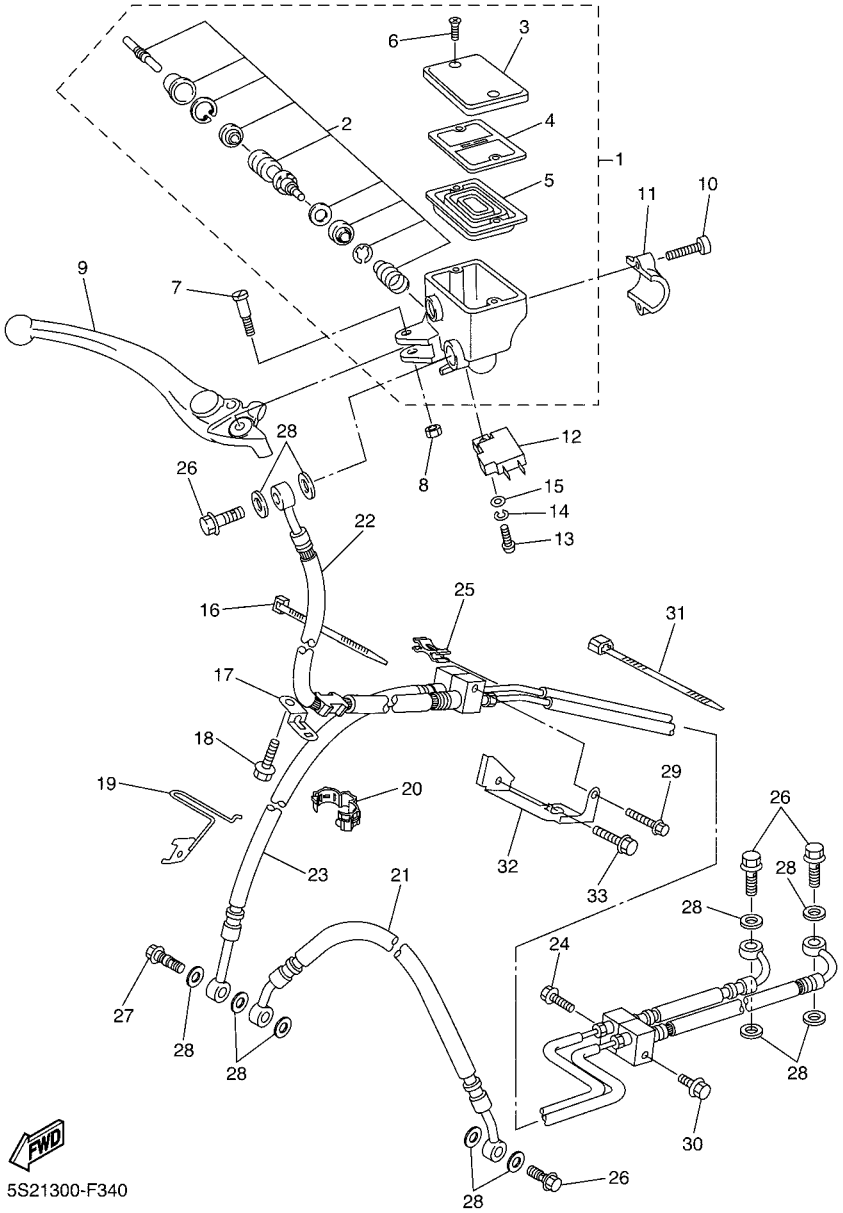


## FIG. 34 CILINDRO MAESTRO DELANTERO

| REF. Nº | CODIGO Nº | DESCRIPCION | 5S42 | | | | | OBSERVACIONES |
|---|---|---|---|---|---|---|---|---|
| 28 | 90430–10005 | JUNTA | 11 | | | | | |
| 29 | 95027–06025 | PERNO, DE BRIDA | 1 | | | | | |
| 30 | 95027–06010 | PERNO, DE BRIDA | 1 | | | | | |
| 31 | 90464–15195 | BRIDA | 2 | | | | | |
| 32 | 4P5–2588F–00 | SOPORTE DE MANGUERA FRENO 5 | 1 | | | | | |
| 33 | 90105–06040 | TORNILLO | 1 | | | | | |

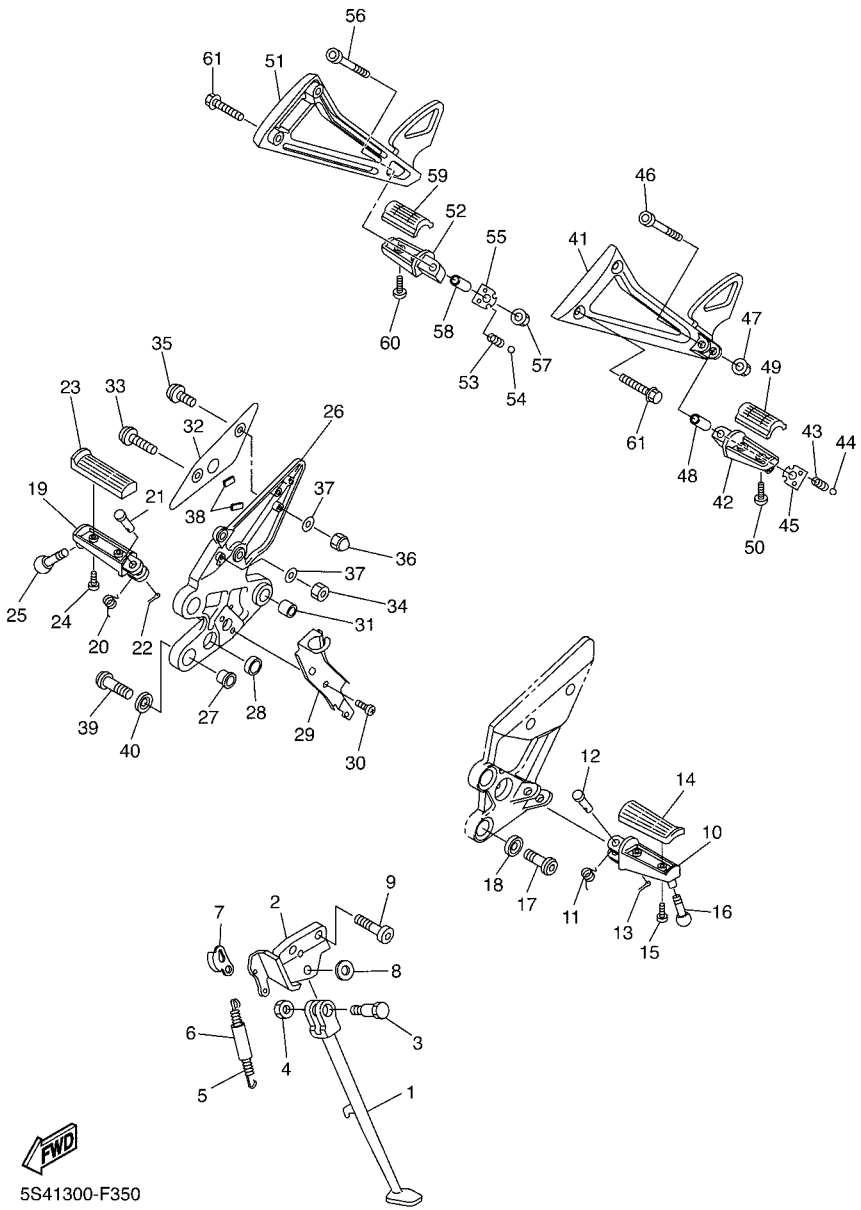


## FIG. 35 SOPORTE & APOYAPIE

| REF. Nº | CODIGO Nº | DESCRIPCION | 5S42 | | | | | OBSERVACIONES |
|---|---|---|---|---|---|---|---|---|
| 1 | 5VX–27311–01 | PUNTAL LATERAL | 1 | | | | | |
| 2 | 5VX–27321–02 | SOPORTE DE PUNTAL LATERAL | 1 | | | | | |
| 3 | 90109–10011 | PERNO | 1 | | | | | |
| 4 | 90185–10037 | TUERCA AUTOBLOCANTE | 1 | | | | | |
| 5 | 90506–23007 | RESORTE DE TENSION | 1 | | | | | |
| 6 | 5VX–27351–00 | GUIA DE PUNTAL LATERAL | 1 | | | | | |
| 7 | 5VX–27315–00 | CONEXION DE PUNTAL LATERAL | 1 | | | | | |
| 8 | 90201–12021 | ARANDELA PLANA | 1 | | | | | |
| 9 | 90110–10010 | TORNILLO ALLEN | 2 | | | | | |
| 10 | 4BH–27451–01 | APOYAPIE | 1 | | | | | |
| 11 | 90508–20572 | RESORTE DE TORSION | 1 | | | | | |
| 12 | 91701–08040 | PASADOR DE ABRAZADERA | 1 | | | | | |
| 13 | 91401–25015 | PASADOR DE CHAVETA | 1 | | | | | |
| 14 | 3YX–27413–00 | CUBIERTA DE APOYAPIE | 1 | | | | | |
| 15 | 90157–05079 | TORNILLO CABEZA CONICA PLANA | 2 | | | | | |
| 16 | 90109–08174 | PERNO | 1 | | | | | |
| 17 | 90110–08220 | TORNILLO ALLEN | 2 | | | | | |
| 18 | 90209–08295 | ARANDELA DE SEPARACION | 2 | | | | | |
| 19 | 4BH–27461–01 | APOYAPIE | 1 | | | | | |
| 20 | 90508–20572 | RESORTE DE TORSION | 1 | | | | | |
| 21 | 91701–08040 | PASADOR DE ABRAZADERA | 1 | | | | | |
| 22 | 91401–25015 | PASADOR DE CHAVETA | 1 | | | | | |
| 23 | 3YX–27413–00 | CUBIERTA DE APOYAPIE | 1 | | | | | |
| 24 | 90157–05079 | TORNILLO CABEZA CONICA PLANA | 2 | | | | | |
| 25 | 90109–08174 | PERNO | 1 | | | | | |
| 26 | 5VX–27443–10 | SOPORTE 3 | 1 | | | | | |
| 27 | 5VX–27424–00 | AMORTIGUADOR DE APOYAPIE 2 | 2 | | | | | |

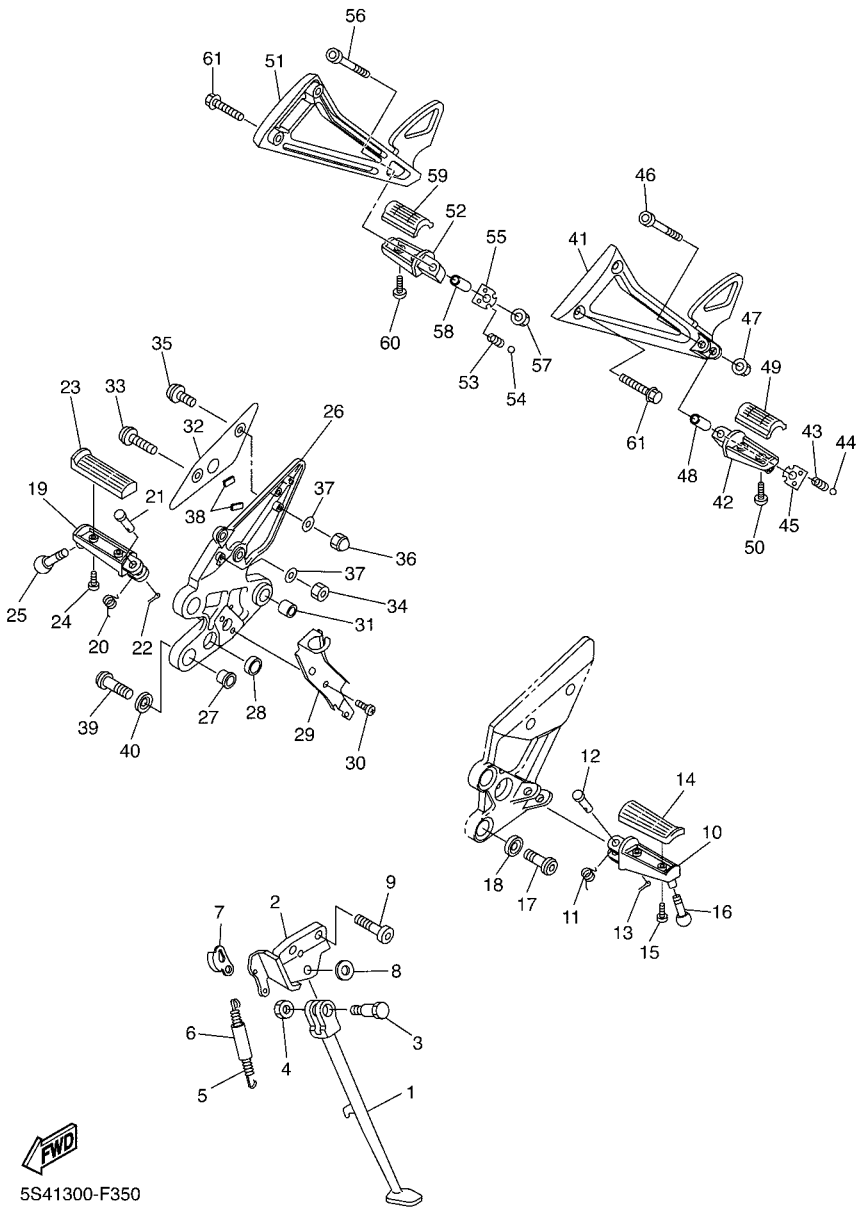


## FIG. 35 SOPORTE & APOYAPIE

| REF. Nº | CODIGO Nº | DESCRIPCION | 5S42 | | | | | OBSERVACIONES |
|---|---|---|---|---|---|---|---|---|
| 28 | 5VX–27114–00 | TOPE DE PUNTAL PRINCIPAL | 1 | | | | | |
| 29 | 5VX–2144G–00 | SOPORTE DE INTERRUPTOR | 1 | | | | | |
| 30 | 98507–06008 | TORNILLO DE CABEZA PLANA | 2 | | | | | |
| 31 | 90383–14001 | BUJE | 1 | | | | | |
| 32 | 4S8–27446–00 | PLACE 2 | 1 | | | | | |
| 33 | 92014–05012 | PERNO | 1 | | | | | |
| 34 | 95607–05100 | TUERCA AUTOBLOCANTE | 1 | | | | | |
| 35 | 92014–05014 | PERNO | 1 | | | | | |
| 36 | 90176–05001 | TUERCA CORONA | 1 | | | | | |
| 37 | 92990–05200 | ARANDELA PLANA | 2 | | | | | |
| 38 | 4S8–27415–00 | PLACA DE APOYAPIE | 2 | | | | | |
| 39 | 90110–08220 | TORNILLO ALLEN | 2 | | | | | |
| 40 | 90209–08295 | ARANDELA DE SEPARACION | 2 | | | | | |
| 41 | 4S8–2741L–00 | MENSULA 4 | 1 | | | | | |
| 42 | 5LV–27431–01 | APOYAPIE POSTERIOR 1 | 1 | | | | | |
| 43 | 90501–15001 | RESORTE DE COMPRESION | 1 | | | | | |
| 44 | 93501–04011 | BOLA | 1 | | | | | |
| 45 | 5JJ–27437–01 | ARANDELA ESPECIAL | 1 | | | | | |
| 46 | 91314–06040 | PERNO | 1 | | | | | |
| 47 | 95604–06200 | TUERCA DE AUTO-CIERRE | 1 | | | | | |
| 48 | 90387–06014 | ESPACIADOR | 1 | | | | | |
| 49 | 3YX–27413–00 | CUBIERTA DE APOYAPIE | 1 | | | | | |
| 50 | 90157–05134 | TORNILLO CABEZA CONICA PLANA | 2 | | | | | |
| 51 | 4S8–2742L–00 | MENSULA 5 | 1 | | | | | |
| 52 | 5LV–27441–01 | APOYAPIE POSTERIOR 2 | 1 | | | | | |
| 53 | 90501–15001 | RESORTE DE COMPRESION | 1 | | | | | |
| 54 | 93501–04011 | BOLA | 1 | | | | | |

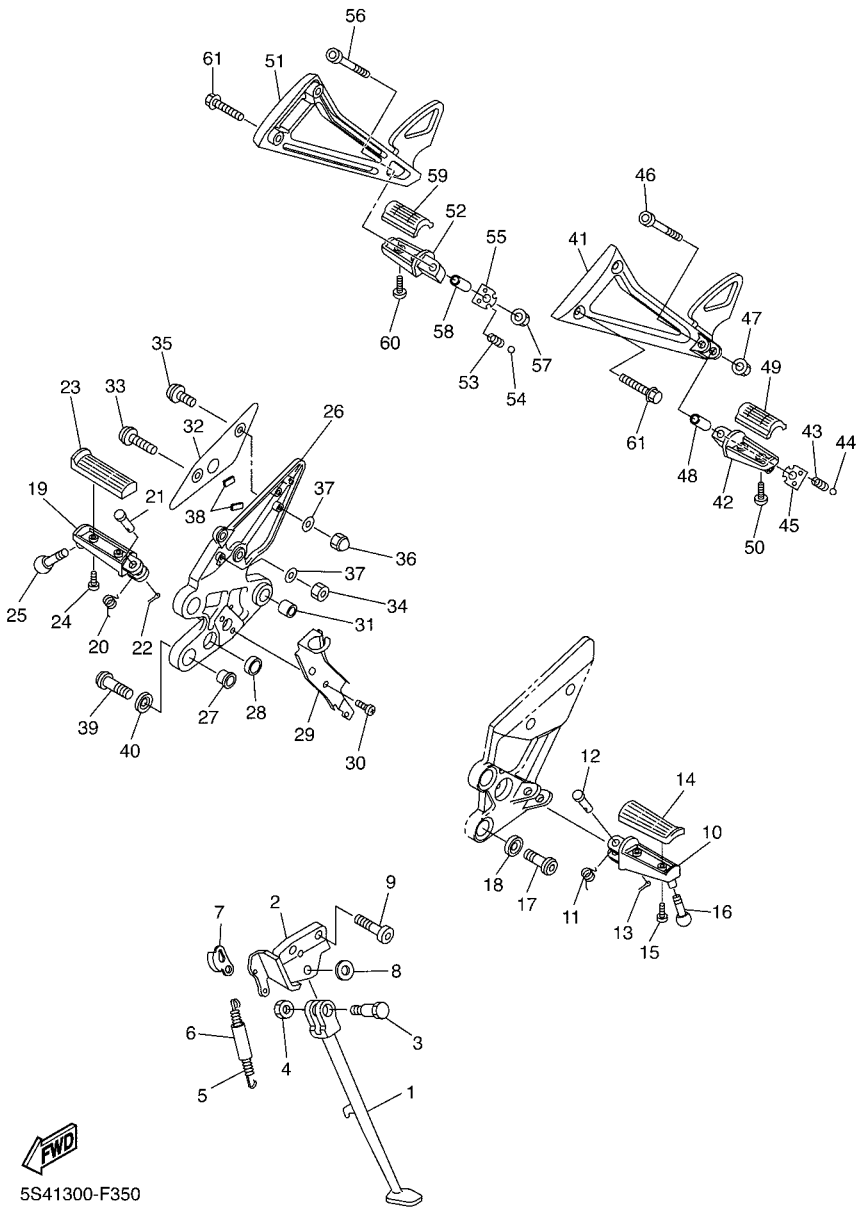


## FIG. 35 SOPORTE & APOYAPIE

| REF. Nº | CODIGO Nº | DESCRIPCION | 5S42 | | | | | OBSERVACIONES |
|---|---|---|---|---|---|---|---|---|
| 55 | 5JJ–27437–01 | ARANDELA ESPECIAL | 1 | | | | | |
| 56 | 91314–06040 | PERNO | 1 | | | | | |
| 57 | 95604–06200 | TUERCA DE AUTO-CIERRE | 1 | | | | | |
| 58 | 90387–06014 | ESPACIADOR | 1 | | | | | |
| 59 | 3YX–27413–00 | CUBIERTA DE APOYAPIE | 1 | | | | | |
| 60 | 90157–05134 | TORNILLO CABEZA CONICA PLANA | 2 | | | | | |
| 61 | 90105–081A4 | TORNILLO | 4 | | | | | |

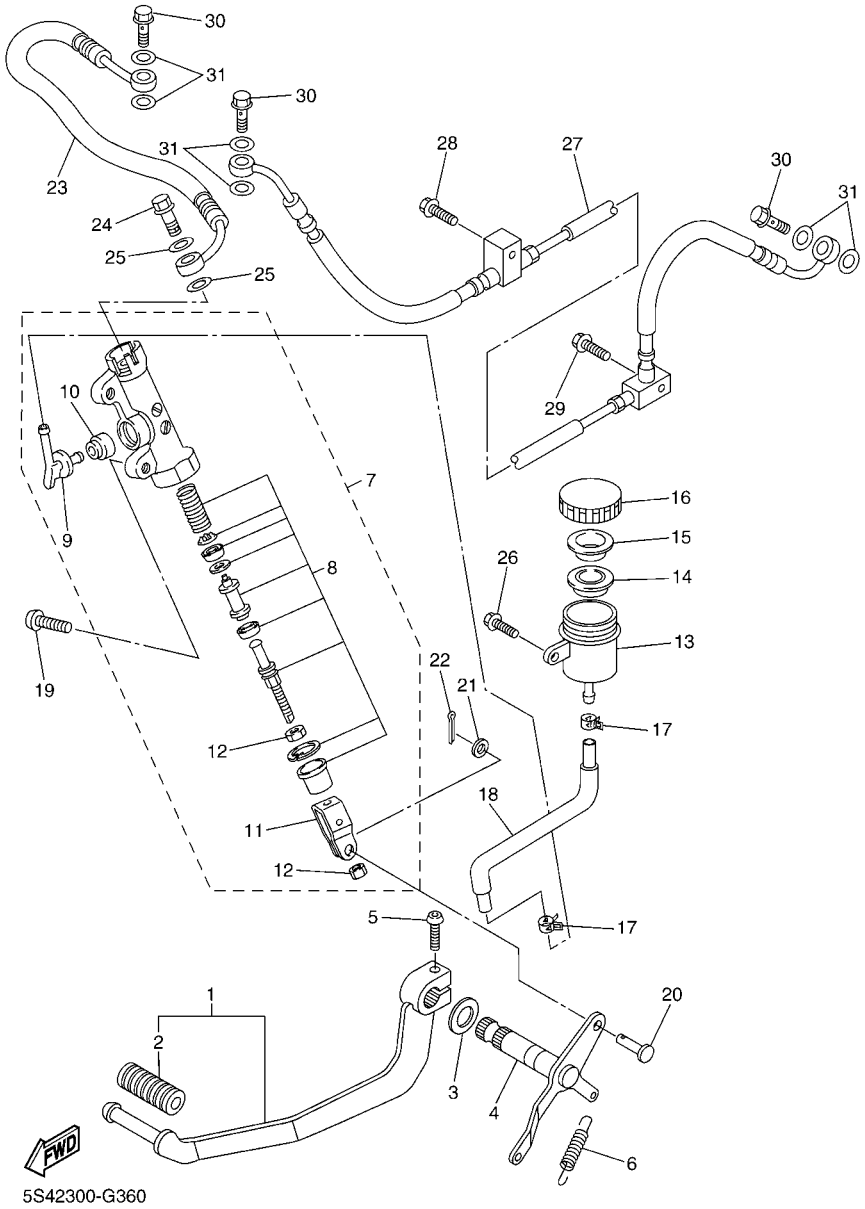


## FIG. 36 CILINDRO MAESTRO TRASERO

| REF. Nº | CODIGO Nº | DESCRIPCION | 5S42 | | | | | OBSERVACIONES |
|---|---|---|---|---|---|---|---|---|
| 1 | 5VX–27200–00 | PEDAL DE FRENO | 1 | | | | | |
| 2 | 5EB–18113–00 | .FUNDA DEL PEDAL DEL CAMBIO | 1 | | | | | |
| 3 | 90201–14215 | ARANDELA PLANA | 1 | | | | | |
| 4 | 5VX–27212–00 | EJE DE PEDAL DE FRENO | 1 | | | | | |
| 5 | 92014–06020 | PERNO | 1 | | | | | |
| 6 | 90506–20223 | RESORTE DE TENSION | 1 | | | | | |
| 7 | 4P5–2583V–00 | CILINDRO, MAESTRO TRASERO | 1 | | | | | |
| 8 | 5VX–W0042–50 | .JUEGO DE CILINDRO MAESTRO | 1 | | | | | |
| 9 | 2D1–2582A–00 | .CONECTOR | 1 | | | | | |
| 10 | 4BP–2585F–00 | .BUJE | 1 | | | | | |
| 11 | 4BP–27222–01 | .UNION | 1 | | | | | |
| 12 | 90170–08010 | .TUERCA | 2 | | | | | |
| 13 | 4P5–25894–00 | TANQUE DE RESERVA | 1 | | | | | |
| 14 | 5SL–25854–00 | DIAFRAGMA TANQUE RESERVA | 1 | | | | | |
| 15 | 5SL–25855–00 | BUJE DE DIAFRAGMA | 1 | | | | | |
| 16 | 5SL–25852–00 | TAPA DE TANQUE DE RESERVA | 1 | | | | | |
| 17 | 90467–120A3 | PRESILLA | 2 | | | | | |
| 18 | 4P5–25895–00 | MANGUERA DE TANQUE DE RESERVA | 1 | | | | | |
| 19 | 92014–08020 | PERNO | 2 | | | | | |
| 20 | 90240–08124 | PASADOR CON HOYO | 1 | | | | | |
| 21 | 90201–08083 | ARANDELA PLANA | 1 | | | | | |
| 22 | 91401–20012 | PASADOR DE CHAVETA | 1 | | | | | |
| 23 | 4P5–2581J–00 | MANGUERA, DE FRENO 4 | 1 | | | | | |
| 24 | 90401–10020 | PERNO DE UNION | 1 | | | | | |
| 25 | 90430–10005 | JUNTA | 2 | | | | | |
| 26 | 90119–06044 | TORNILLO CON ARANDELA | 1 | | | | | |
| 27 | 4P5–2581K–01 | MANGUERA, DE FRENO | 1 | | | | | |

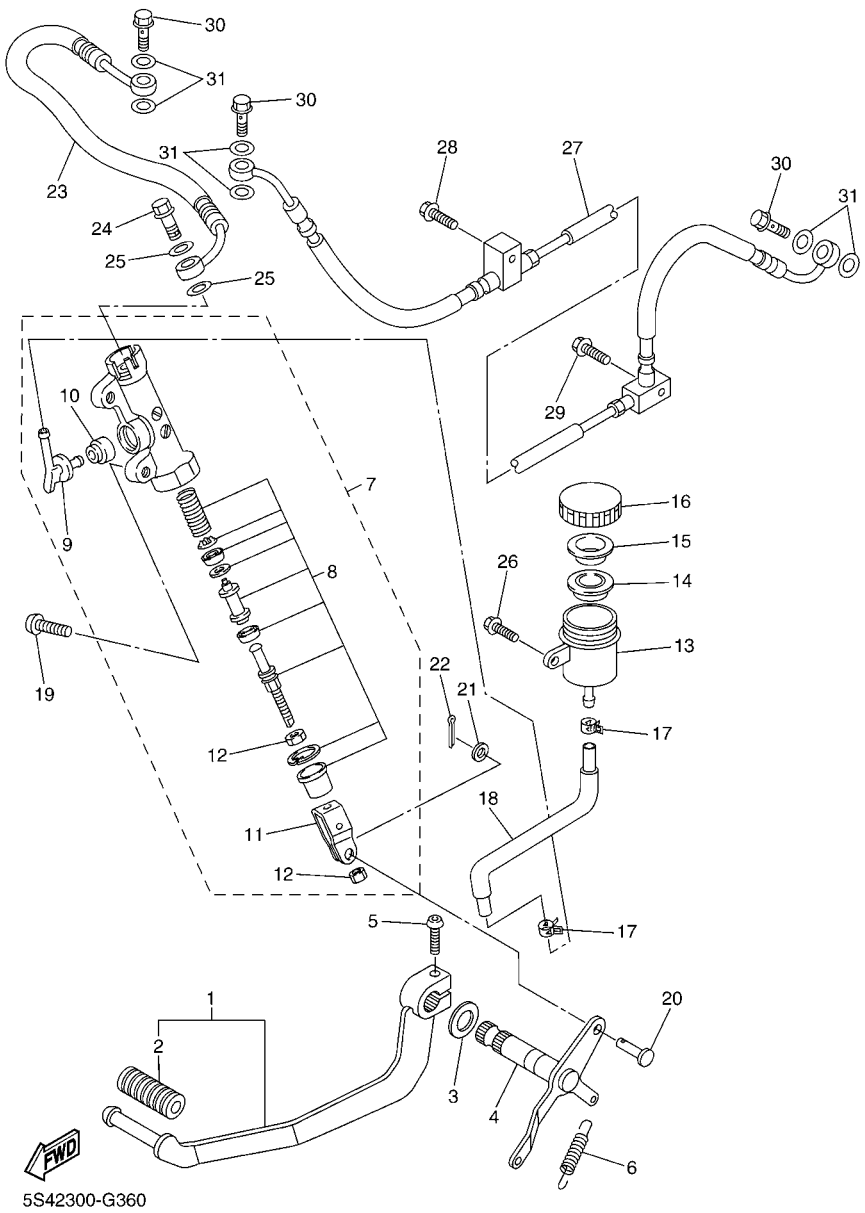


## FIG. 36 CILINDRO MAESTRO TRASERO

| REF. Nº | CODIGO Nº | DESCRIPCION | 5S42 | | | | | OBSERVACIONES |
|---|---|---|---|---|---|---|---|---|
| 28 | 95027–06025 | PERNO, DE BRIDA | 1 | | | | | |
| 29 | 95027–06010 | PERNO, DE BRIDA | 1 | | | | | |
| 30 | 90401–10020 | PERNO DE UNION | 3 | | | | | |
| 31 | 90430–10005 | JUNTA | 6 | | | | | |

## FIG. 37 GENERADOR

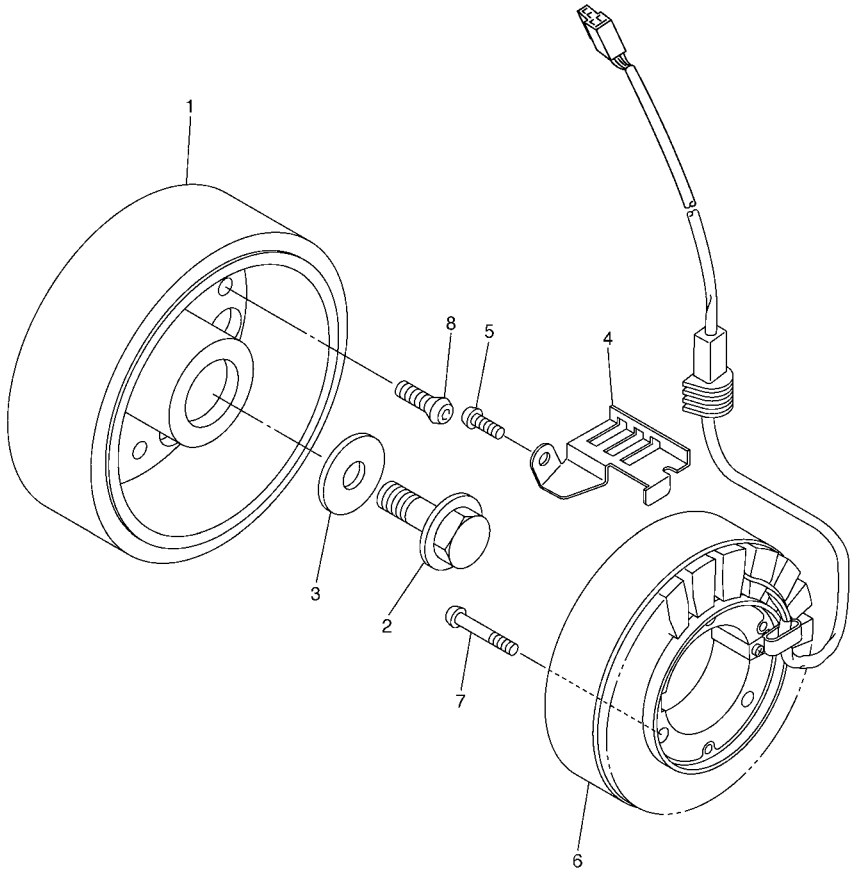

5VX1351-C380

| REF. Nº | CODIGO Nº | DESCRIPCION | 5S42 | | | | | OBSERVACIONES |
|---|---|---|---|---|---|---|---|---|
| 1 | 5VX–81450–00 | ROTOR COMPLETO | 1 | | | | | |
| 2 | 90105–126A8 | TORNILLO | 1 | | | | | |
| 3 | 90201–12008 | ARANDELA PLANA | 1 | | | | | |
| 4 | 5VX–15484–00 | GRAMPA 2 | 1 | | | | | |
| 5 | 90149–06250 | TORNILLO DE REGLAJE | 1 | | | | | |
| 6 | 5VX–81410–00 | ESTATOR COMPLETO | 1 | | | | | |
| 7 | 90149–06019 | TORNILLO DE REGLAJE | 3 | | | | | |
| 8 | 90149–08003 | TORNILLO DE REGLAJE | 3 | | | | | |

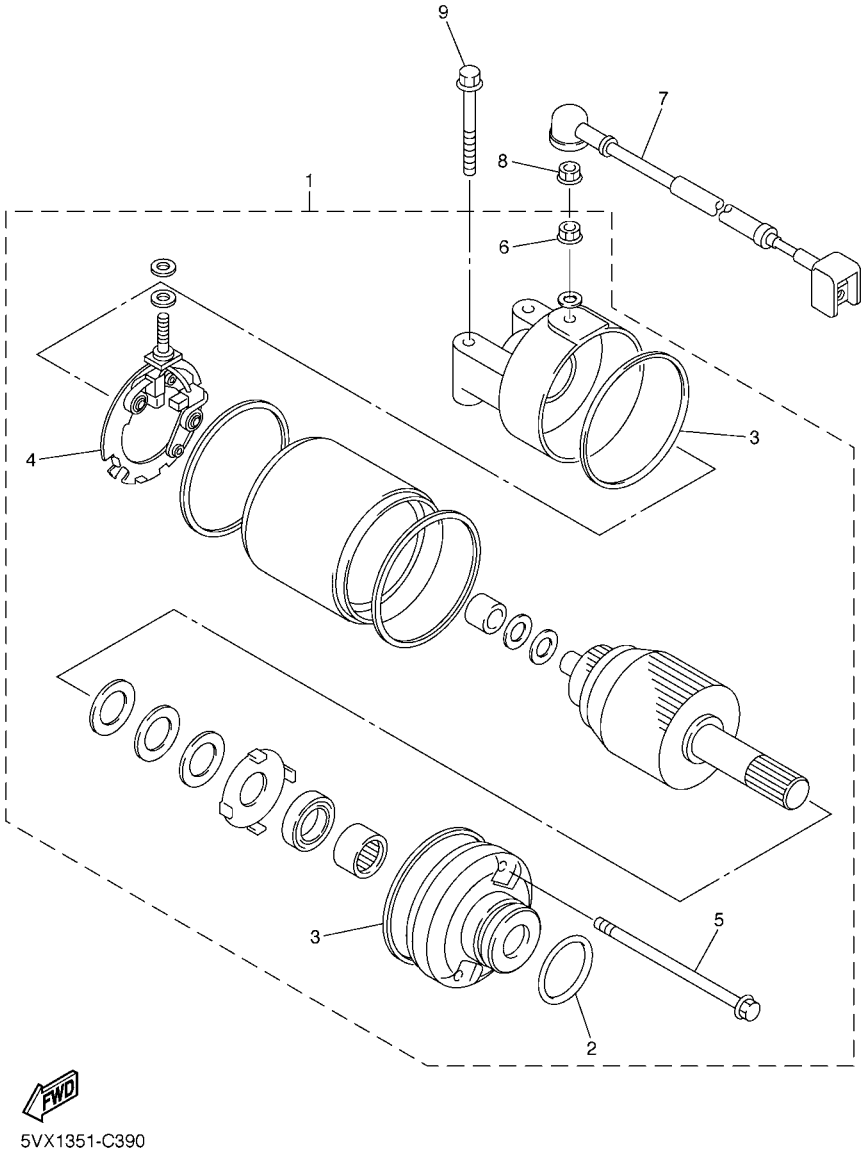


## FIG. 38 MOTOR DE ARRANQUE

| REF. Nº | CODIGO Nº | DESCRIPCION | 5S42 | | | | | OBSERVACIONES |
|---|---|---|---|---|---|---|---|---|
| 1 | 5EB–81890–00 | MOTOR DE ARRANQUE COMPLETO | 1 | | | | | |
| 2 | 1FK–81847–00 | .ANILLO GOMA | 1 | | | | | |
| 3 | 4WP–81844–00 | .EMPAQUE | 2 | | | | | |
| 4 | 4WP–81801–00 | .JUEGO DE ESCOBILLA | 1 | | | | | |
| 5 | 4WP–81826–00 | .PERNO | 2 | | | | | |
| 6 | 4XV–8182A–00 | .TUERCA | 1 | | | | | |
| 7 | 5VX–81815–00 | CABLE, MOTOR DE ARRANQUE | 1 | | | | | |
| 8 | 4XV–8182A–00 | TUERCA | 1 | | | | | |
| 9 | 95027–06040 | PERNO, DE BRIDA | 2 | | | | | |

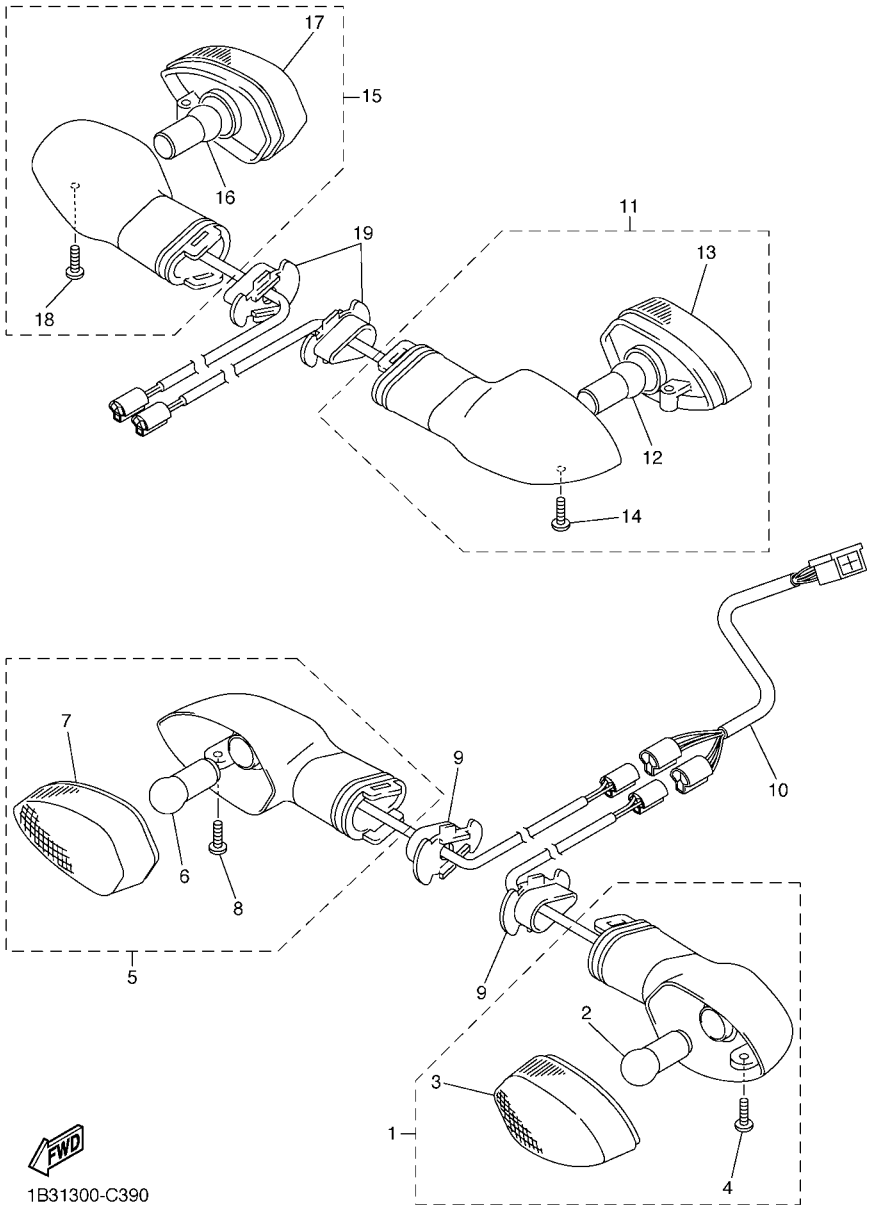


## FIG. 39 LUZ DE DESTELLADOR

| REF. Nº | CODIGO Nº | DESCRIPCION | 5S42 | | | | | OBSERVACIONES |
|---|---|---|---|---|---|---|---|---|
| 1 | 5PW–83310–01 | DESTELLADOR DE LUZ DELANT. | 1 | | | | | |
| 2 | 1KH–83311–00 | .BOMBILLA (12V-10W) | 1 | | | | | |
| 3 | 5PW–8333A–00 | .LENTES COMPLETO | 1 | | | | | |
| 4 | 97706–04012 | .TORNILLO, ROSCA CHAPA | 1 | | | | | |
| 5 | 5PW–83320–01 | DESTELLADOR DE LUZ DELANT. | 1 | | | | | |
| 6 | 1KH–83311–00 | .BOMBILLA (12V-10W) | 1 | | | | | |
| 7 | 5PW–8334A–00 | .LENTES COMPLETO | 1 | | | | | |
| 8 | 97706–04012 | .TORNILLO, ROSCA CHAPA | 1 | | | | | |
| 9 | 5PW–83318–00 | SOPORTE DE DESTELLADOR 1 | 2 | | | | | |
| 10 | 1B3–82509–00 | CABLE SUBCONDUCTOR | 1 | | | | | |
| 11 | 5VX–83330–00 | DESTELLADOR DE LUZ TRAS.COMPL. | 1 | | | | | |
| 12 | 1KH–83311–00 | .BOMBILLA (12V-10W) | 1 | | | | | |
| 13 | 5PW–8334A–00 | .LENTES COMPLETO | 1 | | | | | |
| 14 | 97706–04012 | .TORNILLO, ROSCA CHAPA | 1 | | | | | |
| 15 | 5VX–83340–00 | DESTELLADOR DE LUZ TRAS.COMPL. | 1 | | | | | |
| 16 | 1KH–83311–00 | .BOMBILLA (12V-10W) | 1 | | | | | |
| 17 | 5PW–8333A–00 | .LENTES COMPLETO | 1 | | | | | |
| 18 | 97706–04012 | .TORNILLO, ROSCA CHAPA | 1 | | | | | |
| 19 | 5PW–83318–00 | SOPORTE DE DESTELLADOR 1 | 2 | | | | | |

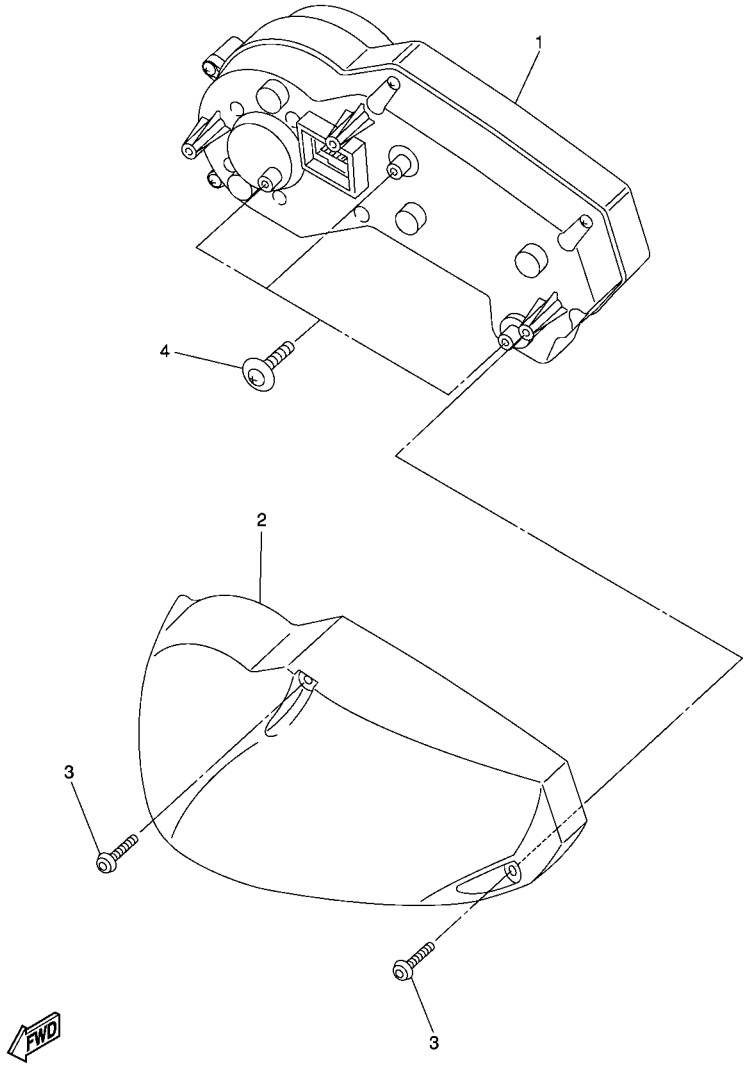


5S51300-F400

## FIG. 40 MEDIDOR

| REF. Nº | CODIGO Nº | DESCRIPCION | 5S42 | | | | | OBSERVACIONES |
|---|---|---|---|---|---|---|---|---|
| 1 | 5S2–83500–20 | VELOCIMETRO COMPLETO (KM/H) | 1 | | | | | |
| 2 | 2D1–83559–00 | CUBIERTA DE MEDIDOR | 1 | | | | | |
| 3 | 90167–05076 | TORNILLO DE ROSCA HEMBRA | 3 | | | | | |
| 4 | 90164–05014 | TORNILLO ROSCA HEMBRA | 3 | | | | | |

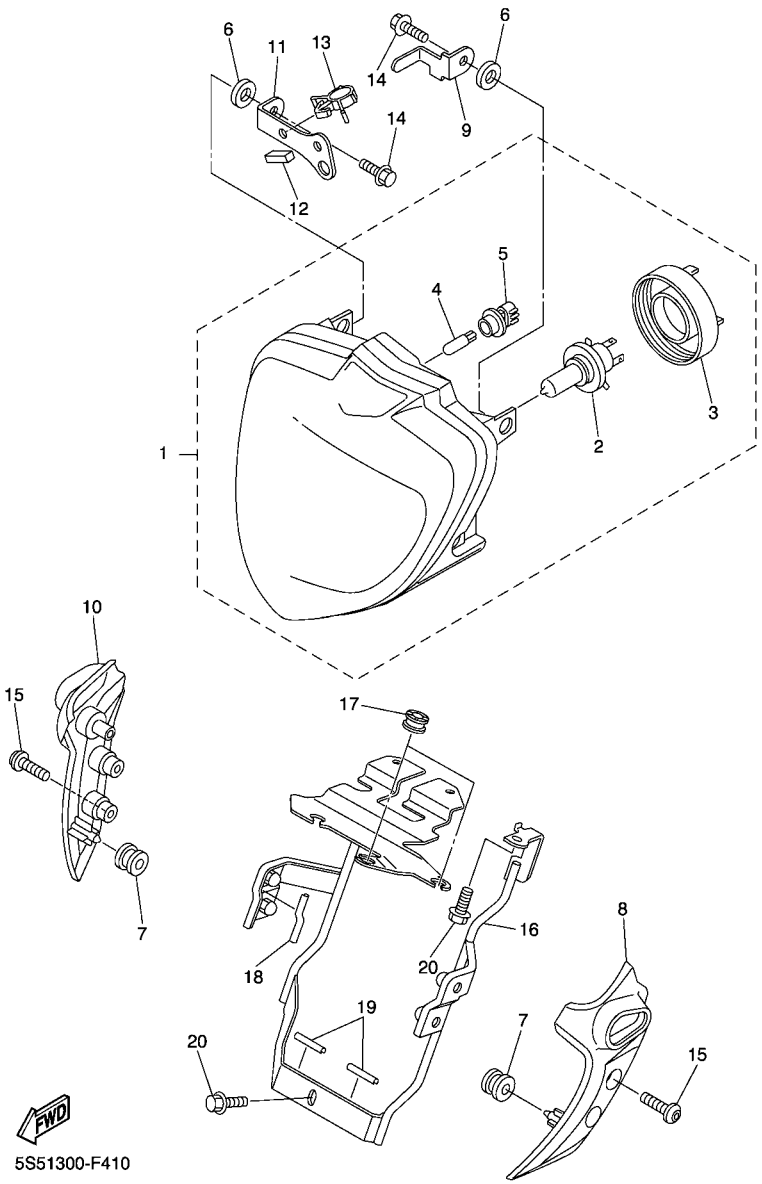


## FIG. 41 FARO DELANTERO

| REF. Nº | CODIGO Nº | DESCRIPCION | 5S42 | | | | | OBSERVACIONES |
|---|---|---|---|---|---|---|---|---|
| 1 | 1B3–84300–01 | FARO DELANTERO COMPLETO | 1 | | | | | |
| 2 | 2F9–84314–00 | .BOMBILLA (12V-60/55W) | 1 | | | | | (H4)HALOGEN |
| 3 | 5JW–84397–00 | .CUBIERTA DE ENCASTRE | 1 | | | | | |
| 4 | 5DM–84347–00 | .AMPOLLETA (12V-5W) | 1 | | | | | |
| 5 | 5JW–84346–00 | .ENCASTRE DE LUZ PILOTO | 1 | | | | | |
| 6 | 90480–14008 | TAPON | 2 | | | | | |
| 7 | 90480–12072 | TAPON | 2 | | | | | |
| 8 | 1B3–23121–10 | CUBIERTA SUPERIOR 1 | 1 | | | | | |
| 9 | 1B3–83599–00 | GUIA DE CABLE | 1 | | | | | |
| 10 | 1B3–23131–10 | CUBIERTA SUPERIOR 2 | 1 | | | | | |
| 11 | 1B3–8431R–00 | SOPORTE | 1 | | | | | |
| 12 | 1HX–27415–00 | PLACA | 1 | | | | | |
| 13 | 90464–15157 | BRIDA | 1 | | | | | |
| 14 | 95027–06014 | PERNO, DE BRIDA | 2 | | | | | |
| 15 | 90149–06302 | TORNILLO DE REGLAJE | 4 | | | | | |
| 16 | 5S4–23174–00 | SOPORTE DEL FARO DELANTERO | 1 | | | | | |
| 17 | 4XV–83513–00 | AMORTIGUADOR | 3 | | | | | |
| 18 | 1B3–28307–00 | SELLO | 1 | | | | | |
| 19 | 1B3–28307–10 | SELLO | 2 | | | | | |
| 20 | 95817–06012 | TORNILLO | 4 | | | | | |

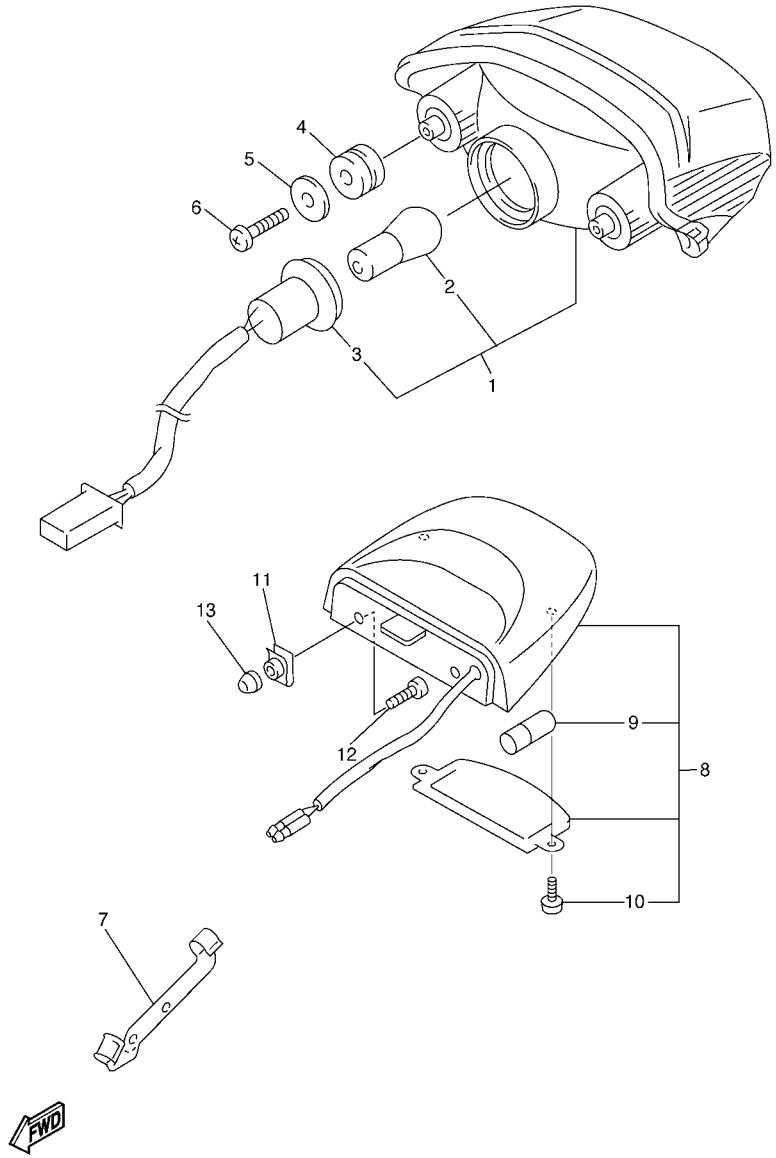


## FIG. 42 LUZ DE COLA

| REF. Nº | CODIGO Nº | DESCRIPCION | 5S42 | | | | | OBSERVACIONES |
|---|---|---|---|---|---|---|---|---|
| 1 | 5VX–84710–00 | UNIDAD FARO TRASERO COMPL. | 1 | | | | | |
| 2 | 137–84714–60 | .BOMBILLA (12V-21/5W) | 1 | | | | | |
| 3 | 5VX–84735–00 | .CABLE COMPLETA | 1 | | | | | |
| 4 | 90480–18276 | TAPON | 2 | | | | | |
| 5 | 90201–06071 | ARANDELA PLANA | 2 | | | | | |
| 6 | 97707–60016 | TORNILLO ROSCA HEMBRA | 2 | | | | | |
| 7 | 5VX–21637–00 | GRAMPA DE CABLE | 1 | | | | | |
| 8 | 5VX–84745–01 | UNIDAD DE LUZ DE LICENCIA COMP | 1 | | | | | |
| 9 | 4HC–84744–00 | .BOMBILLA (12V-5W) | 1 | | | | | |
| 10 | 97706–04012 | .TORNILLO, ROSCA CHAPA | 2 | | | | | |
| 11 | 90183–05061 | TUERCA DE RESORTE | 2 | | | | | |
| 12 | 98907–05014 | TORNILLO DE LIGAR | 2 | | | | | |
| 13 | 5VX–13569–01 | TAPON CIEGO | 2 | | | | | |

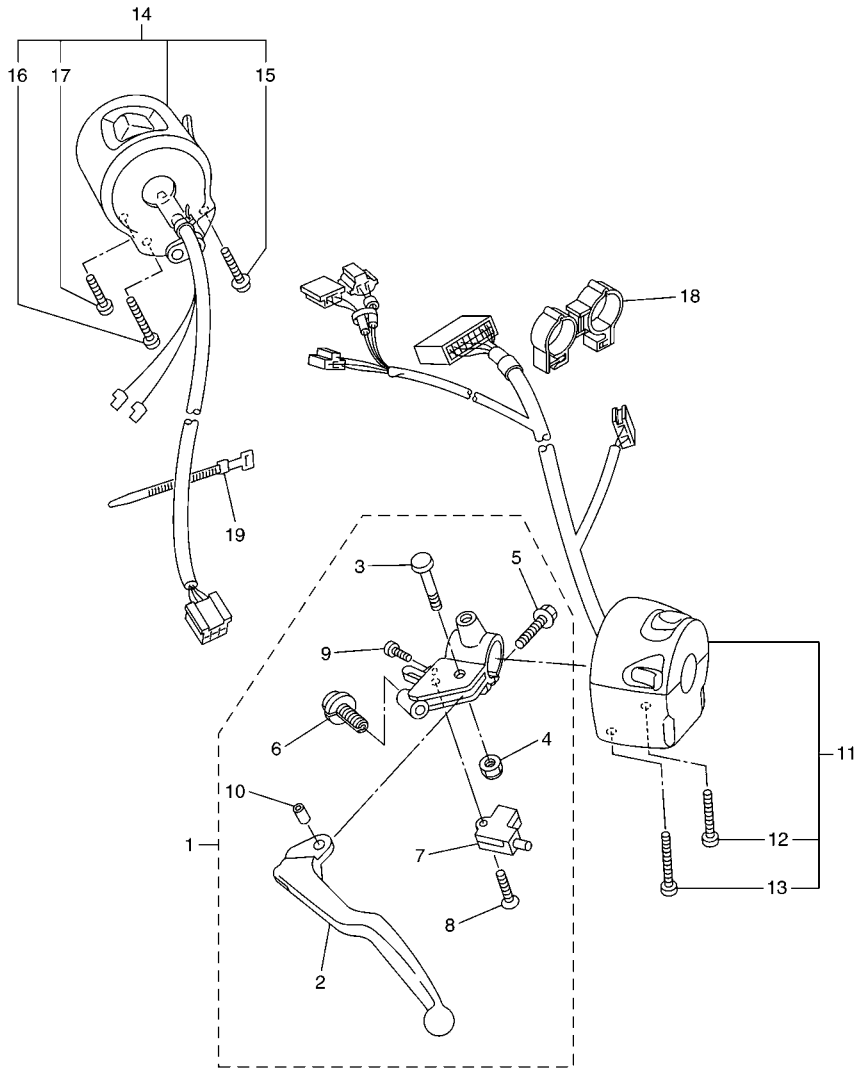


27P1280-G430

## FIG. 43 INTERRUPTOR DE MANILLAR&PALANC

| REF. Nº | CODIGO Nº | DESCRIPCION | 5S42 | | | | | OBSERVACIONES |
|---|---|---|---|---|---|---|---|---|
| 1 | 1B3–82910–01 | SOPORTE DE LEVA COMPLT 1 | 1 | | | | | |
| 2 | 5EB–83912–03 | .PALANCA 1 | 1 | | | | | |
| 3 | 4XV–83945–00 | .PERNO DE PALANCA | 1 | | | | | |
| 4 | 95607–06100 | .TUERCA AUTOBLOCANTE | 1 | | | | | |
| 5 | 95027–06020 | .PERNO, DE BRIDA | 1 | | | | | |
| 6 | 5LV–83951–00 | .PERNO DE CABLE DE AJUSTE | 1 | | | | | |
| 7 | 3YX–82917–01 | .INTERRUPTOR | 1 | | | | | |
| 8 | 98704–03020 | .TORNILLO DE CABEZA PLANA | 1 | | | | | |
| 9 | 98507–04010 | .TORNILLO DE CABEZA PLANA | 1 | | | | | |
| 10 | 5JJ–83913–00 | .COLLAR DE PALANCA 1 | 1 | | | | | |
| 11 | 1B3–83969–01 | INTERRUPTOR DE MANIJA 5 | 1 | | | | | |
| 12 | 98507–05030 | .TORNILLO DE CABEZA PLANA | 1 | | | | | |
| 13 | 98507–05045 | .TORNILLO DE CABEZA PLANA | 1 | | | | | |
| 14 | 5VX–83975–01 | INTERRUPTOR DE MANIJA 2 | 1 | | | | | |
| 15 | 97607–05255 | .TORNILLO CAB CON PLANA C/ARAN | 1 | | | | | |
| 16 | 98507–05045 | .TORNILLO DE CABEZA PLANA | 1 | | | | | |
| 17 | 98507–05020 | .TORNILLO DE CABEZA PLANA | 1 | | | | | |
| 18 | 90464–24002 | BRIDA | 1 | | | | | |
| 19 | 437–83936–01 | BANDA DE CABLE DE INTERRUPTOR | 1 | | | | | |

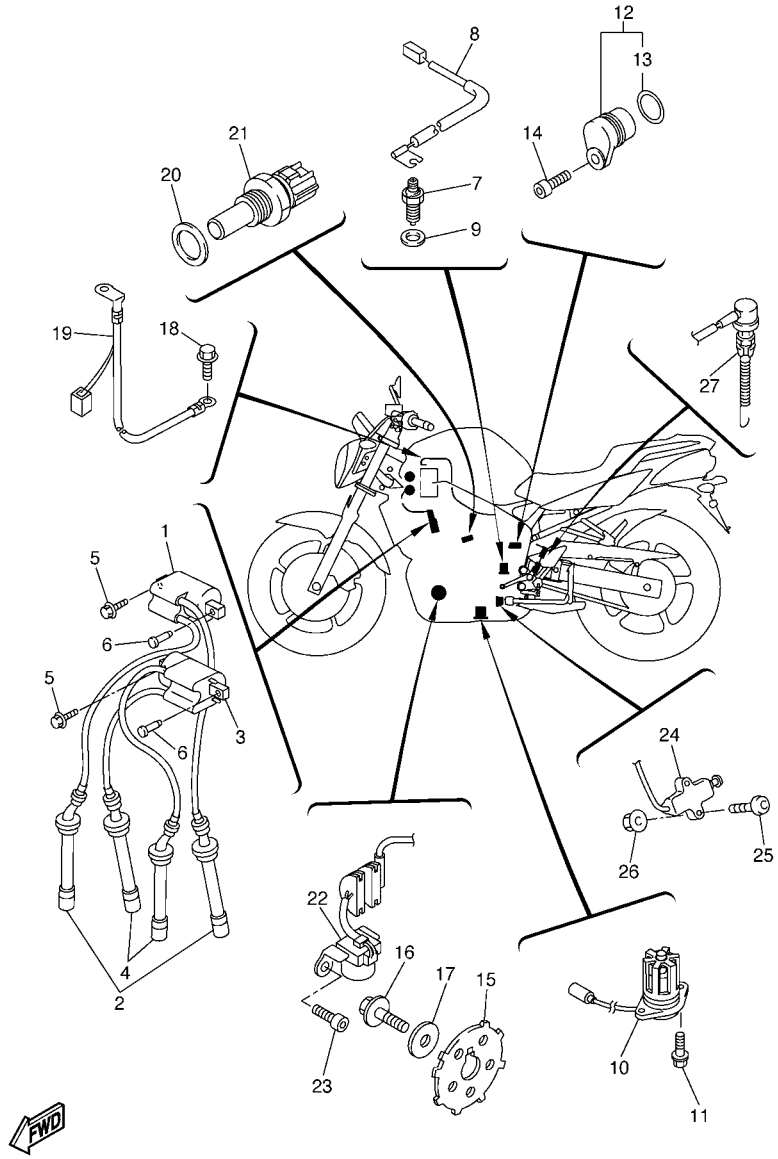


5S31300-F440

## FIG. 44 EQUIPO ELECTRICO 1

| REF. Nº | CODIGO Nº | DESCRIPCION | 5S42 | | | | | OBSERVACIONES |
|---|---|---|---|---|---|---|---|---|
| 1 | 5VX–82310–00 | BOBINA DE ENCENDIDO COMPLETA | 1 | | | | | |
| 2 | 5VX–82370–00 | TAPON DE BUJIA COMPLT | 2 | | | | | |
| 3 | 5VX–82320–00 | BOBINA DE ENCENDIDO COMPLETA | 1 | | | | | |
| 4 | 5VX–82370–00 | TAPON DE BUJIA COMPLT | 2 | | | | | |
| 5 | 90105–06557 | TORNILLO | 2 | | | | | |
| 6 | 90269–06010 | REMACHE | 2 | | | | | |
| 7 | 3GB–82540–01 | INTERRUPTOR NEUTRAL COMPL | 1 | | | | | |
| 8 | 5VX–82541–00 | CABLE CONDUCTOR | 1 | | | | | |
| 9 | 90430–10148 | JUNTA | 1 | | | | | |
| 10 | 5VX–85720–01 | MEDIDOR DE NIVEL DE ACEITE | 1 | | | | | |
| 11 | 95022–06016 | PERNO, DE BRIDA | 2 | | | | | |
| 12 | 3P6–15399–00 | TAPON CIEGO | 1 | | | | | |
| 13 | 93210–15566 | .ANILLO O | 1 | | | | | |
| 14 | 91312–06016 | TORNILLO | 1 | | | | | |
| 15 | 5VX–81673–00 | ROTOR | 1 | | | | | |
| 16 | 90105–08113 | TORNILLO | 1 | | | | | |
| 17 | 90201–08753 | ARANDELA PLANA | 1 | | | | | |
| 18 | 91380–06012 | PERNO | 1 | | | | | |
| 19 | 4P5–82116–00 | CABLE CONDUCTOR NEGATIVO | 1 | | | | | |
| 20 | 90201–12790 | ARANDELA PLANA | 1 | | | | | |
| 21 | 8CC–85790–01 | TERMICA SENSORIO | 1 | | | | | |
| 22 | 5VX–81670–00 | RECOGEDOR COMPL. | 1 | | | | | |
| 23 | 91317–06016 | PERNO | 2 | | | | | |
| 24 | 5VS–82566–61 | INTERRUPTOR | 1 | | | | | |
| 25 | 92017–05025 | PERNO | 2 | | | | | |
| 26 | 95607–05200 | TUERCA DE AUTO-CIERRE | 2 | | | | | |
| 27 | 5VX–82530–00 | INTERRUPTOR DE PARADA COMPLETO | 1 | | | | | |

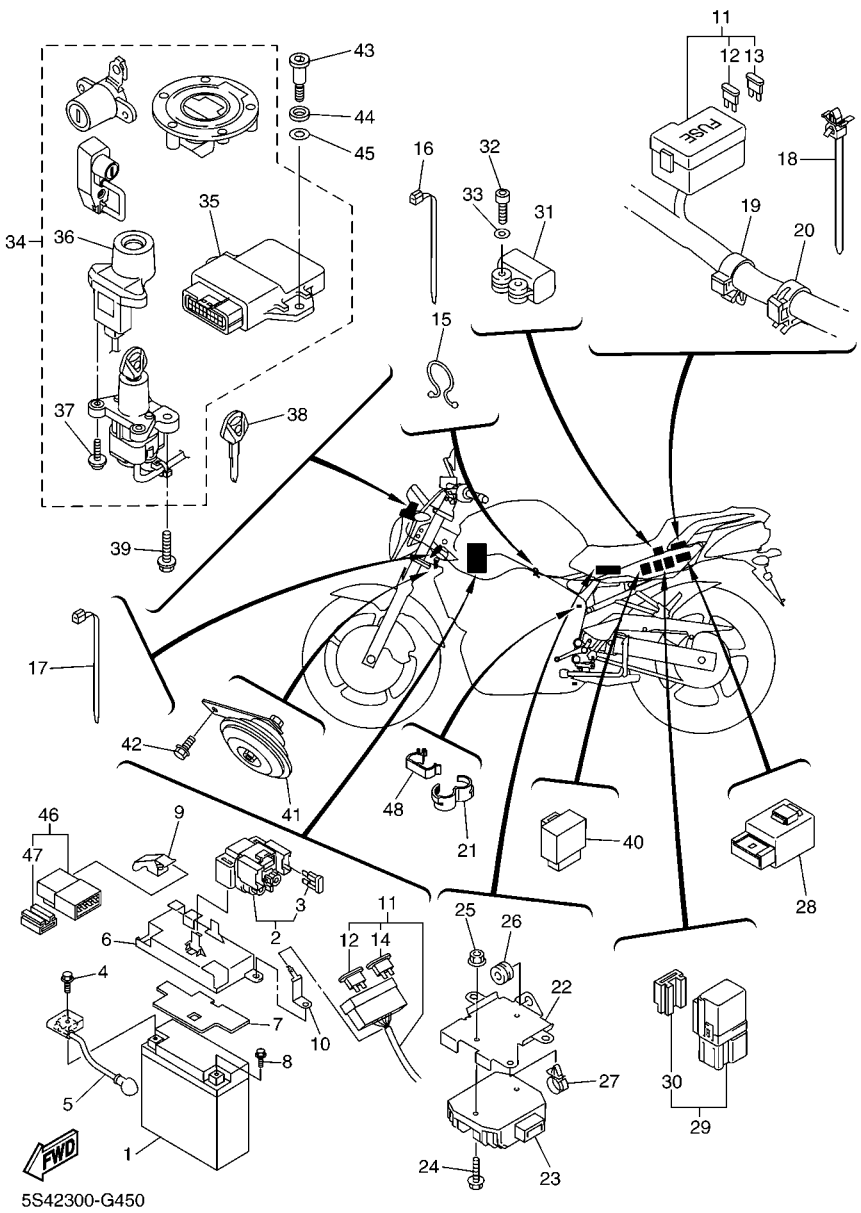


## FIG. 45 EQUIPO ELECTRICO 2

| REF. Nº | CODIGO Nº | DESCRIPCION | 5S42 | | | | | OBSERVACIONES |
|---|---|---|---|---|---|---|---|---|
| 1 | 4TX–82100–02 | BATERIA COMPLETA (GS GT12B-4) | 1 | | | | | |
| 2 | 4BH–81940–02 | CONJUNTO ARRANCADOR RELEVO | 1 | | | | | |
| 3 | 1AE–82151–00 | .FUSIBLE (30A-BL) | 2 | | | | | |
| 4 | 95027–06008 | PERNO, DE BRIDA | 1 | | | | | |
| 5 | 4P5–82115–00 | CABLE CONDUCTOR POSITIVO | 1 | | | | | |
| 6 | 5VX–2124E–00 | CUBIERAT, DE BATERIA | 1 | | | | | |
| 7 | 5VX–82123–00 | ASIENTO DE BATERIA | 1 | | | | | |
| 8 | 95027–06008 | PERNO, DE BRIDA | 1 | | | | | |
| 9 | 4P5–81953–00 | SOPORTE DE RELE | 1 | | | | | |
| 10 | 4P5–82153–00 | ABRAZADERA FUSIBLE | 1 | | | | | |
| 11 | 5S4–82590–00 | CONJUNTO DE CABLES | 1 | | | | | |
| 12 | 5JJ–82151–30 | .FUSIBLE (10A-BL) | 7 | | | | | |
| 13 | 5JJ–82151–20 | .FUSIBLE (20A-BL) | 3 | | | | | |
| 14 | 5JJ–82151–60 | .FUSIBLE (30A-BL) | 2 | | | | | |
| 15 | 90464–14058 | BRIDA | 1 | | | | | |
| 16 | 90464–13077 | BRIDA | 1 | | | | | |
| 17 | 90464–13077 | BRIDA | 1 | | | | | |
| 18 | 90464–12089 | BRIDA | 1 | | | | | |
| 19 | 90464–16006 | BRIDA | 2 | | | | | |
| 20 | 90464–15192 | BRIDA | 2 | | | | | |
| 21 | 90464–16001 | BRIDA | 1 | | | | | |
| 22 | 5VX–2128A–00 | MENSULA DE REGULADOR | 1 | | | | | |
| 23 | 5VX–81960–00 | RECTIFICADOR Y REGULADOR | 1 | | | | | |
| 24 | 95807–06020 | TORNILLO | 2 | | | | | |
| 25 | 95707–06500 | TUERCA DE BRIDA | 2 | | | | | |
| 26 | 90480–11005 | TAPON | 1 | | | | | |
| 27 | 90464–13249 | BRIDA | 1 | | | | | |

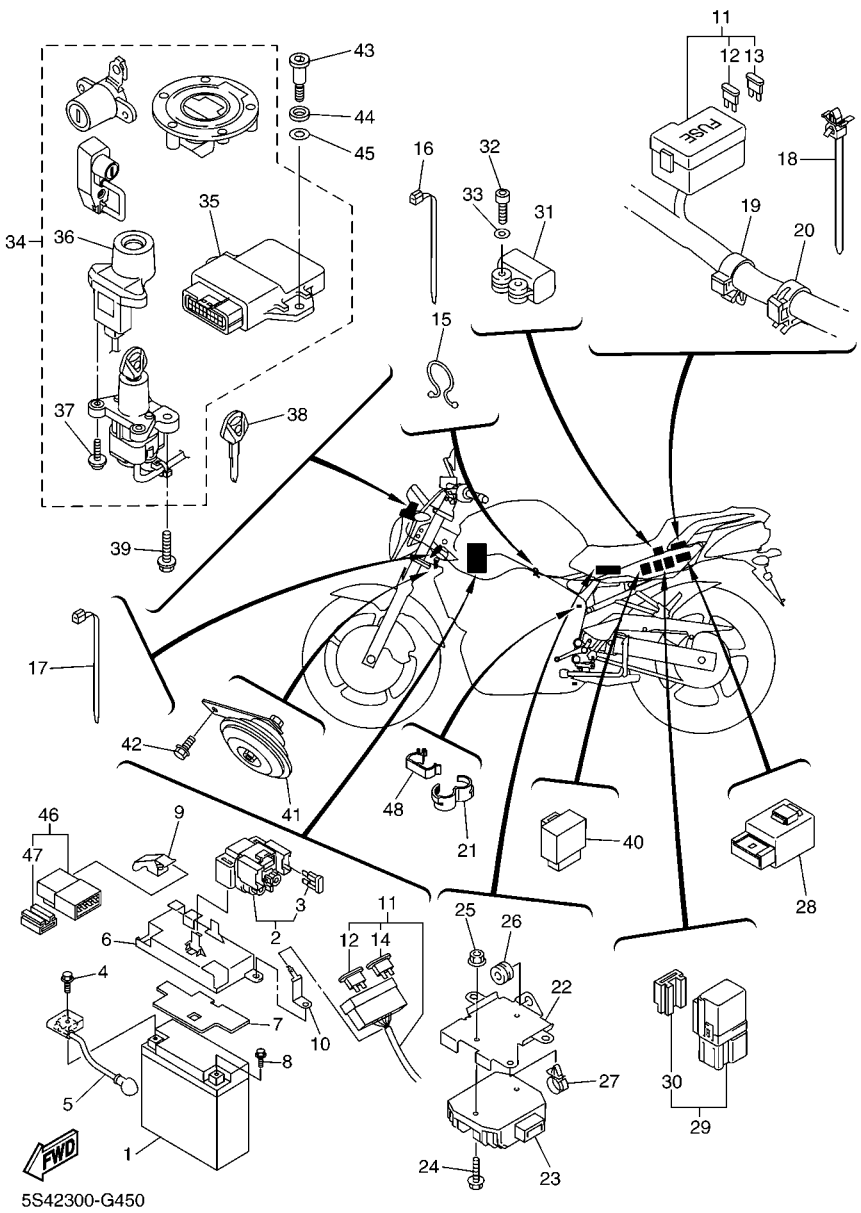


## FIG. 45 EQUIPO ELECTRICO 2

| REF. Nº | CODIGO Nº | DESCRIPCION | 5S42 | | | | | OBSERVACIONES |
|---|---|---|---|---|---|---|---|---|
| 28 | 5VK–81950–30 | RELE COMPLETO | 1 | | | | | |
| 29 | 5EA–81950–20 | RELE COMPLETO | 2 | | | | | |
| 30 | 5EA–81952–00 | .SOSTEN DE RELE | 1 | | | | | |
| 31 | 5PS–82576–01 | SENSOR ANGULO DE INCLINATION | 1 | | | | | |
| 32 | 91317–04025 | PERNO | 2 | | | | | |
| 33 | 90201–047A2 | ARANDELA PLANA | 2 | | | | | |
| 34 | 5S4–W8250–00 | JUEGO DE INMOVILIZADOR | 1 | | | | | |
| 35 | 5S2–8591A–00 | .UNIDAD CONTROL | 1 | | | | | |
| 36 | 1B3–8255P–00 | .UNIDAD INMOVILIZADORA | 1 | | | | | |
| 37 | 5SL–82113–00 | .TORNILLO | 2 | | | | | |
| 38 | 5SL–82511–08 | BLANK KEY | 1 | | | | | AP |
| 39 | 90109–080G5 | PERNO | 2 | | | | | |
| 40 | 3XV–83350–21 | RELE DE DESTELLADOR COMPL. | 1 | | | | | |
| 41 | 5MP–83371–00 | BOCINA | 1 | | | | | |
| 42 | 92017–06010 | PERNO | 1 | | | | | |
| 43 | 90109–06055 | PERNO | 2 | | | | | |
| 44 | 5VX–21778–00 | AMORTIGUADOR DE MONTAJE | 2 | | | | | |
| 45 | 90202–08205 | ARANDELA DE PLANA | 2 | | | | | |
| 46 | 5EA–81950–20 | RELE COMPLETO | 1 | | | | | |
| 47 | 5EA–81952–00 | .SOSTEN DE RELE | 1 | | | | | |
| 48 | 90464–24230 | BRIDA | 1 | | | | | |

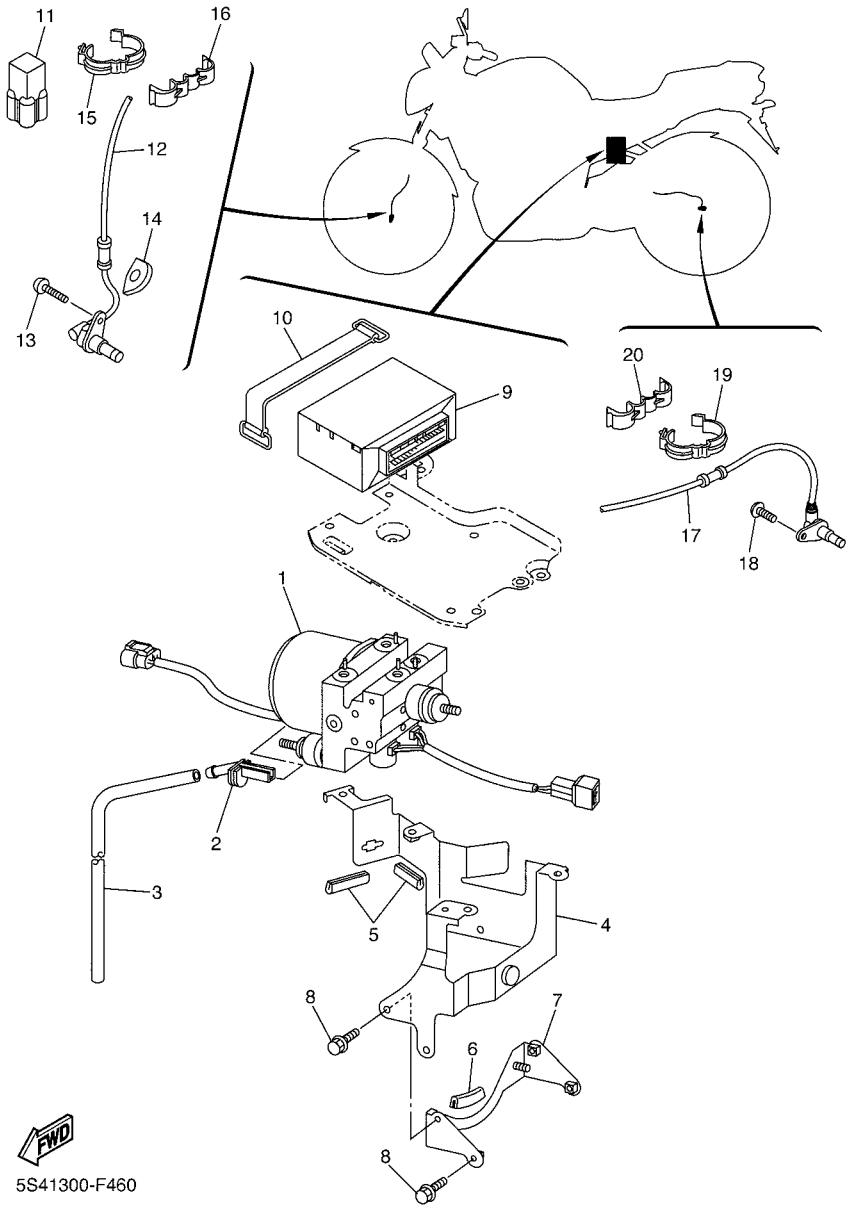


## FIG. 46 EQUIPO ELECTRICO 3

| REF. Nº | CODIGO Nº | DESCRIPCION | 5S42 | | | | | OBSERVACIONES |
|---|---|---|---|---|---|---|---|---|
| 1 | 4P5–85930–09 | UNIDAD DE HIDRAULICA | 1 | | | | | |
| 2 | 5CG–24196–00 | TAPON DE DRENAJE | 1 | | | | | |
| 3 | 90445–10144 | TUBO (L450) | 1 | | | | | |
| 4 | 4P5–2175T–00 | SOPORTE 1 | 1 | | | | | |
| 5 | 1FK–2171M–00 | MUELLE, CUBIERTA LATERAL 2 | 2 | | | | | |
| 6 | 3VD–24188–00 | MOLDURA DEPOSITO COMBUST. | 1 | | | | | |
| 7 | 4P5–2175U–00 | SOPORTE 2 | 1 | | | | | |
| 8 | 95827–06010 | TORNILLO | 4 | | | | | |
| 9 | 5S2–85940–00 | UNIDAD DE CONTROL COMPLETA | 1 | | | | | |
| 10 | 120–82131–00 | TIRANTE DE BATERIA | 1 | | | | | |
| 11 | 3YA–82378–00 | CONECTOR | 1 | | | | | |
| 12 | 5S2–85970–00 | CONJUNTO DE CABLES | 1 | | | | | |
| 13 | 92014–06014 | PERNO | 1 | | | | | |
| 14 | 5S2–23317–00 | SOSTEN DE CABLE | 1 | | | | | |
| 15 | 90464–12013 | BRIDA | 3 | | | | | |
| 16 | 90464–10233 | BRIDA | 1 | | | | | |
| 17 | 4P5–85980–00 | CONJUNTO DE CABLES | 1 | | | | | |
| 18 | 92014–06014 | PERNO | 1 | | | | | |
| 19 | 90464–12013 | BRIDA | 3 | | | | | |
| 20 | 90464–10233 | BRIDA | 1 | | | | | |

INDICE NUMERICO

| CODIGO Nº | REF. Nº |
|---|---|
| 1B3–11101–00 | B – 2 |
| 4KG–1111G–00 | B – 2 |
| 5EB–11133–10 | B – 2 |
| 5SL–11165–00 | C – 4 |
| 5VX–11181–00 | B – 2 |
| 1B3–11191–00 | B – 2 |
| 5SL–11193–00 | B – 2 |
| 214–11198–01 | B – 11 |
| 5SL–11411–00 | B – 3 |
| 5EB–11416–00 | B – 3 |
| 5EB–11416–10 | B – 3 |
| 5EB–11416–20 | B – 3 |
| 5EB–11416–30 | B – 3 |
| 5EB–11416–A0 | B – 3 |
| 5SL–11603–00 | B – 3 |
| 5SL–11631–00 | B – 3 |
| 5EB–11633–00 | B – 3 |
| 5VX–11650–00 | B – 3 |
| 5VX–11654–00 | B – 3 |
| 5VX–11656–00 | B – 3 |
| 5VX–11656–10 | B – 3 |
| 5VX–11656–20 | B – 3 |
| 5VX–11656–30 | B – 3 |
| 5SL–12111–10 | B – 4 |
| 5EB–12113–00 | B – 4 |
| 5EB–12114–00 | B – 4 |
| 5SL–12116–00 | B – 4 |
| 5EB–12117–00 | B – 4 |
| 1HX–12118–00 | B – 4 |
| 4TV–12119–00 | B – 4 |
| 5SL–12121–10 | B – 4 |
| 5EB–12124–01 | B – 4 |
| 5EB–12126–00 | B – 4 |
| 5EB–12127–00 | B – 4 |
| 5EB–12153–09 | B – 5 |
| 5EB–12153–20 | B – 5 |
| 5EB–12153–30 | B – 5 |
| 1HX–12168–00 | B – 4 |
| 1HX–12168–20 | B – 4 |
| 1HX–12168–40 | B – 4 |
| 1HX–12168–60 | B – 4 |
| 1HX–12168–80 | B – 4 |
| 1HX–12168–A0 | B – 4 |
| 1HX–12168–F0 | B – 4 |
| 1HX–12168–H1 | B – 4 |
| 1HX–12168–K1 | B – 4 |
| 1HX–12168–M1 | B – 4 |
| 1HX–12168–R1 | B – 4 |

| CODIGO Nº | REF. Nº |
|---|---|
| 1HX–12168–U1 | B – 4 |
| 1HX–12168–W1 | B – 4 |
| 1HX–12168–Y1 | B – 4 |
| 1HX–12169–11 | B – 4 |
| 1HX–12169–31 | B – 4 |
| 1HX–12169–50 | B – 5 |
| 1HX–12169–70 | B – 5 |
| 1HX–12169–90 | B – 5 |
| 1HX–12169–E0 | B – 5 |
| 1HX–12169–G0 | B – 5 |
| 1HX–12169–J0 | B – 5 |
| 1HX–12169–L0 | B – 5 |
| 1HX–12169–N0 | B – 5 |
| 1HX–12169–T0 | B – 5 |
| 5VX–12170–00 | B – 6 |
| 5VX–12176–00 | B – 6 |
| 5VX–12180–00 | B – 6 |
| 5SL–12210–10 | B – 6 |
| 4FM–12213–00 | B – 6 |
| 5SL–12214–00 | B – 6 |
| 5EL–12228–00 | B – 6 |
| 5BE–12241–00 | B – 2 |
| 5EB–12251–00 | B – 6 |
| 5EB–12252–10 | B – 6 |
| 4S8–12405–00 | B – 8 |
| 5VX–1240J–10 | B – 8 |
| 5SL–12410–00 | B – 8 |
| 5VX–12413–00 | B – 8 |
| 5EB–12421–00 | B – 7 |
| 5SL–12422–00 | B – 7 |
| 5FC–12437–00 | B – 8 |
| 11H–12438–10 | B – 7 |
| 5EB–12439–00 | B – 7 |
| 5VX–1243A–00 | B – 9 |
| 5VX–1243E–00 | B – 14 |
| 4S8–1244E–00 | B – 8 |
| 5VX–1244G–00 | B – 9 |
| 5EB–12450–00 | B – 7 |
| 4S8–12461–00 | B – 8 |
| 1B3–12462–00 | B – 8 |
| 4S8–12467–00 | B – 8 |
| 5EB–12469–00 | B – 7 |
| 5GV–1246A–00 | B – 7 |
| 5GV–1246E–00 | B – 7 |
| | B – 8 |
| 1AA–12535–00 | B – 8 |
| 5EB–12577–01 | B – 7 |
| 4S8–12578–00 | B – 8 |

| CODIGO Nº | REF. Nº |
|---|---|
| 4NK–12579–00 | B – 7 |
| 4S8–12579–00 | B – 8 |
| 5VX–12581–00 | B – 7 |
| 5SL–12588–01 | B – 7 |
| 4S8–12589–00 | B – 9 |
| 5EB–12822–00 | B – 11 |
| 5VX–13160–00 | B – 14 |
| 5EB–13161–00 | B – 10 |
| 5EB–1316E–00 | B – 10 |
| 5MT–13300–00 | B – 10 |
| 5SL–13410–00 | B – 10 |
| 5VX–13414–01 | B – 11 |
| 5EB–13415–00 | B – 10 |
| 2C0–13416–00 | B – 10 |
| 4S8–13417–00 | B – 11 |
| 5VX–13418–00 | C – 4 |
| 5GH–13440–20 | B – 11 |
| 5EB–13470–00 | B – 11 |
| 5JW–13473–00 | B – 11 |
| 5EB–13475–00 | B – 11 |
| 3KS–13490–00 | B – 11 |
| 5VX–13533–00 | B – 14 |
| 68V–13533–00 | B – 13 |
| 5VX–13569–01 | F – 6 |
| 5SL–13586–01 | B – 12 |
| 5SL–13596–01 | B – 12 |
| 5VX–13750–04 | B – 13 |
| 5VX–13761–00 | B – 13 |
| 5EB–13898–00 | B – 10 |
| 5VX–13907–01 | D – 13 |
| 5VX–13971–00 | D – 13 |
| 5JW–14104–00 | B – 13 |
| 5VX–1410E–00 | B – 13 |
| 4KM–14137–00 | B – 13 |
| 3H1–14147–00 | B – 13 |
| 5PS–14147–00 | B – 13 |
| 5VX–14148–01 | B – 12 |
| 5VX–14149–00 | B – 13 |
| 8CC–14216–10 | B – 13 |
| 3XV–14251–00 | B – 13 |
| 5PW–14251–00 | B – 13 |
| 5VX–14348–00 | B – 13 |
| 5FL–14348–10 | B – 13 |
| 5VX–14349–00 | B – 14 |
| 5VX–14396–00 | B – 13 |
| 5VX–14409–00 | B – 12 |
| 5VX–14411–00 | B – 12 |
| 5VX–14421–00 | B – 12 |

| CODIGO Nº | REF. Nº |
|---|---|
| 5CA–14435–00 | B – 12 |
| 5VX–14451–00 | B – 12 |
| 5VX–14452–00 | B – 12 |
| 5VX–14453–00 | B – 12 |
| 5VX–14463–00 | B – 12 |
| 5VX–14503–00 | B – 14 |
| 5VX–14565–00 | B – 13 |
| 4S8–14610–00 | C – 2 |
| 3YF–14613–01 | C – 2 |
| 5VX–1467K–00 | C – 2 |
| 5VX–14708–10 | C – 2 |
| 5VX–14710–01 | C – 2 |
| 5VY–14714–00 | C – 2 |
| 5EB–14714–01 | C – 2 |
| 5JW–14723–00 | B – 15 |
| 4S8–14740–00 | C – 2 |
| 4FB–14766–00 | C – 3 |
| 5VX–14807–00 | B – 14 |
| 5SL–1482K–00 | B – 2 |
| 5VX–14840–00 | B – 15 |
| 5VX–14881–00 | B – 15 |
| 5VX–14882–00 | B – 15 |
| 5VX–14883–00 | B – 15 |
| 5SL–14890–00 | B – 2 |
| 5SL–14899–00 | B – 2 |
| 3UH–14937–00 | B – 13 |
| 5VX–14987–00 | B – 13 |
| 1B3–15100–01 | C – 4 |
| 11H–15138–00 | B – 2 |
| 5EB–15155–00 | C – 4 |
| 5EB–15163–01 | C – 11 |
| 36Y–15189–00 | C – 4 |
| 5SL–15189–00 | C – 4 |
| 3F9–15362–00 | C – 6 |
| 5EB–15362–00 | C – 4 |
| 5VX–15373–00 | B – 12 |
| 3P6–15399–00 | F – 8 |
| 1B3–15411–00 | C – 6 |
| 5VX–15413–01 | C – 4 |
| 1B3–15416–00 | C – 6 |
| 1B3–15418–00 | C – 6 |
| 1B3–15421–00 | C – 6 |
| 1B3–15425–00 | C – 6 |
| 5VX–15441–00 | C – 7 |
| 5VX–15451–01 | C – 6 |
| 5SL–15456–01 | C – 6 |
| 5SL–15461–01 | C – 6 |
| 5SL–15462–00 | C – 4 |

| CODIGO Nº | REF. Nº |
|---|---|
| 5VX–15463–01 | C – 7 |
| 5VX–15484–00 | E – 15 |
| 5SL–15512–00 | C – 8 |
| 5MT–15515–00 | C – 8 |
| 5EB–15521–00 | C – 8 |
| 5SL–15590–00 | C – 8 |
| 5VX–16150–00 | C – 9 |
| 5EB–16154–00 | C – 9 |
| 1AE–16164–00 | C – 9 |
| 4FN–16321–00 | C – 9 |
| 4H7–16321–02 | C – 9 |
| 168–16324–00 | C – 9 |
| 3J2–16324–00 | C – 9 |
| 5VX–16340–00 | C – 9 |
| 132–16346–00 | C – 14 |
| 5EB–16351–01 | C – 9 |
| 5EB–16356–01 | C – 9 |
| 5VX–16371–00 | C – 9 |
| 5VX–16382–00 | C – 9 |
| 5SL–17121–00 | C – 11 |
| 5SL–17131–20 | C – 11 |
| 5VX–17151–00 | C – 11 |
| 5SL–17161–00 | C – 11 |
| 5SL–17211–00 | C – 12 |
| 5VX–17221–00 | C – 11 |
| 5SL–17231–00 | C – 12 |
| 5SL–17241–00 | C – 11 |
| 5VX–17251–00 | C – 12 |
| 5VX–17261–00 | C – 11 |
| 5SL–17411–00 | C – 11 |
| 4S8–17421–00 | C – 11 |
| 278–17424–01 | C – 12 |
| 5VX–17460–00 | C – 12 |
| 5VX–18101–11 | C – 14 |
| 5VX–18110–00 | C – 14 |
| 5VX–18112–01 | C – 14 |
| 5EB–18113–00 | C – 14 |
| | E – 13 |
| 5VX–18115–02 | C – 14 |
| 5VX–18116–00 | C – 14 |
| 1D7–18127–00 | C – 14 |
| 5VX–18140–00 | C – 14 |
| 5VX–18154–00 | C – 14 |
| 5SL–18511–00 | C – 13 |
| 5MT–18512–00 | C – 13 |
| 5EB–18513–00 | C – 13 |
| 4XV–18531–00 | C – 13 |
| 5EB–18536–00 | C – 13 |

| CODIGO Nº | REF. Nº |
|---|---|
| 5VX–18540–00 | C – 13 |
| 136–18542–00 | C – 13 |
| 4S8–21110–09 | D – 2 |
| 5VX–2117B–31 | D – 3 |
| 5VX–2117B–41 | D – 3 |
| 5VX–2117B–A1 | D – 4 |
| 1B3–2117F–00 | D – 2 |
| 5PW–2117K–00 | D – 15 |
| 5VX–2117M–01 | D – 3 |
| 4S8–21190–09 | D – 2 |
| 4S8–2119V–00 | D – 4 |
| 4P5–21228–00 | D – 4 |
| 5VX–21238–00 | D – 2 |
| 5VX–21239–00 | D – 3 |
| 5VX–21249–00 | D – 3 |
| 5VX–2124E–00 | F – 9 |
| 5VX–21268–00 | D – 2 |
| 5VX–21269–00 | D – 3 |
| 5VX–21279–10 | D – 2 |
| 5VX–2128A–00 | F – 9 |
| 4R8–21308–01 | D – 3 |
| 5VX–2135F–00 | D – 3 |
| 5VX–2139B–00 | D – 2 |
| 5VX–2139R–00 | D – 3 |
| 5VX–2139W–00 | D – 3 |
| 5VX–2140A–00 | D – 2 |
| 4S8–21445–00 | C – 2 |
| 5VX–21446–10 | C – 2 |
| 5VX–2144G–00 | E – 11 |
| 4S8–21511–00–P0 | D – 5 |
| 4S8–21511–00–P5 | D – 5 |
| 4S8–21511–00–P6 | D – 5 |
| 5PA–21568–00 | D – 14 |
| 5VS–21578–10 | D – 5 |
| 5VS–21578–20 | D – 5 |
| 5VX–2161G–00 | D – 6 |
| 5VX–21621–00 | D – 6 |
| 5VX–21629–00 | D – 6 |
| 5VX–21637–00 | F – 6 |
| 5VX–21639–00 | D – 5 |
| 5VX–2163A–00 | D – 7 |
| 5VX–2164F–00 | D – 6 |
| 5VX–21650–00 | D – 8 |
| 5VX–21651–00 | D – 5 |
| 5VX–21665–00 | D – 6 |
| 3XW–21668–A1 | D – 8 |
| 5VX–21669–00 | D – 5 |
| 5VX–21710–10 | D – 7 |

INDICE NUMERICO

| CODIGO Nº | REF. Nº |
|---|---|
| 1FK–2171M–00 | F – 11 |
| 5VX–21720–10 | D – 7 |
| 4P5–2172W–00 | B – 9 |
| 5VX–21732–00 | D – 5 |
| 5VX–21735–01 | D – 5 |
| 5VX–2173M–00 | D – 4 |
| 5VX–2173N–01 | D – 6 |
| 5VX–2174X–00 | D – 7 |
| 5VX–2174Y–00 | D – 7 |
| 4P5–2175T–00 | F – 11 |
| 4P5–2175U–00 | F – 11 |
| 4P5–2175V–00 | D – 4 |
| 5VX–21778–00 | F – 10 |
| 5VX–21779–00 | D – 4 |
| 5VX–2177F–00 | D – 7 |
| 5VX–2177G–00 | D – 2 |
| 1B3–21781–80 | D – 7 |
| 1B3–21781–90 | D – 7 |
| 26H–21828–00 | B – 9 |
| 5VX–21843–00 | D – 4 |
| 4P5–21871–00 | B – 9 |
| 4P5–21873–00 | B – 9 |
| 3P6–21875–00 | B – 9 |
| 4S8–22110–00 | D – 8 |
| 5JJ–22128–00 | D – 8 |
| 4FN–22141–00 | D – 8 |
| 5VX–22151–00 | D – 8 |
| 5EB–22184–00 | D – 8 |
| 5VX–22210–00 | D – 9 |
| 34L–22216–00 | D – 9 |
| 5VX–22836–00 | D – 4 |
| 4S8–23102–00 | D – 11 |
| 4S8–23103–00 | D – 11 |
| 4S8–23110–00 | D – 11 |
| 4TX–23115–00 | D – 11 |
| 5VX–23118–00 | D – 11 |
| 5VX–2311H–00 | D – 11 |
| 1B3–23121–10 | F – 5 |
| 4KM–23123–01 | D – 12 |
| 4TX–23125–B0 | D – 11 |
| 4S8–23126–00 | D – 11 |
| 1B3–23131–10 | F – 5 |
| 4TX–23135–B0 | D – 11 |
| 4S8–23136–00 | D – 11 |
| 5VX–23141–00 | D – 11 |
| 4S8–23142–00 | D – 11 |
| 4TX–23144–00 | D – 11 |
| 5VX–23145–00 | D – 11 |

| CODIGO Nº | REF. Nº |
|---|---|
| 4TX–23151–00 | D – 11 |
| 4TX–23156–00 | D – 11 |
| 5VX–23170–00 | D – 11 |
| 4TX–23173–00 | D – 11 |
| 5S4–23174–00 | F – 5 |
| 5S2–23317–00 | F – 11 |
| 4TX–2331G–00 | D – 11 |
| 1B3–23327–10 | D – 12 |
| 5VX–23340–00 | D – 12 |
| 1B3–23377–20 | D – 3 |
| 5VX–23415–00 | D – 10 |
| 26H–23418–01 | D – 10 |
| 4XV–2341B–00 | D – 10 |
| 1B3–23435–10 | D – 10 |
| 4S8–23441–00 | D – 10 |
| 3FV–23462–00 | D – 12 |
| 5SL–2413B–00 | D – 13 |
| 5VX–24141–00 | D – 14 |
| 5EJ–2414H–00 | B – 12 |
| | D – 2 |
| 3ME–2415E–01 | D – 14 |
| 4S8–24161–00 | D – 13 |
| 5VX–24181–00 | D – 13 |
| 5VX–24183–00 | D – 13 |
| 3VD–24188–00 | F – 11 |
| 5VX–24191–00 | D – 13 |
| 5PW–24192–00 | D – 13 |
| 5CG–24196–00 | F – 11 |
| 5S5–24230–00 | D – 13 |
| 5S5–24230–10 | D – 13 |
| 68V–24376–00 | B – 13 |
| 3YJ–24481–00 | D – 2 |
| 5JW–24486–00 | D – 13 |
| 5SL–24491–00 | D – 13 |
| 5JJ–24602–00 | D – 13 |
| 4S8–2470F–10 | D – 15 |
| 5VX–24724–00 | D – 15 |
| 4NK–24728–00 | D – 15 |
| 4S8–24730–10 | D – 15 |
| 5VX–24773–00–P3 | D – 5 |
| 4BP–24780–00 | D – 15 |
| 5VX–2478E–00 | D – 15 |
| 4BP–24792–00 | D – 15 |
| 5EA–25117–00 | E – 2 |
| 4P5–2517A–00–98 | E – 2 |
| 4XV–25181–10 | E – 2 |
| 4XV–25317–00 | E – 4 |
| 4P5–25338–00–0X | E – 4 |

| CODIGO Nº | REF. Nº |
|---|---|
| 4P5–25338–00–98 | E – 4 |
| 5VX–25364–00 | E – 4 |
| 5SL–25366–00 | E – 4 |
| 4P5–2537G–00 | E – 4 |
| 5SL–25381–10 | E – 5 |
| 5SL–25383–00 | E – 4 |
| 5SL–25388–00 | E – 5 |
| 5SL–25389–00 | E – 5 |
| 5MT–25398–00 | E – 2 |
| | E – 4 |
| 5MT–25398–10 | E – 2 |
| | E – 4 |
| 5MT–25398–20 | E – 2 |
| | E – 4 |
| 5VX–25446–01 | E – 4 |
| 4S8–2580T–00 | E – 3 |
| 5S2–2580U–00 | E – 3 |
| 4P5–2580W–00 | E – 6 |
| 4P5–2581J–00 | E – 13 |
| 4P5–2581K–01 | E – 13 |
| 5VX–2581T–01 | E – 3 |
| 5SL–25827–00 | E – 6 |
| 5SL–25827–10 | E – 6 |
| 5SL–25828–00 | E – 6 |
| 2D1–2582A–00 | E – 13 |
| 2D1–2582W–00 | E – 6 |
| 5SL–25838–00 | E – 6 |
| 4P5–2583V–00 | E – 13 |
| 4P5–2584B–11 | E – 8 |
| 5S2–2584C–00 | E – 8 |
| 5SL–25852–00 | E – 13 |
| 5VS–25852–00 | E – 8 |
| 5SL–25854–00 | E – 13 |
| 5VS–25854–00 | E – 8 |
| 5SL–25855–00 | E – 13 |
| 5VS–25855–00 | E – 8 |
| 4BP–2585F–00 | E – 13 |
| 5VS–25867–00 | E – 8 |
| 5S2–25872–00 | E – 8 |
| 4S8–25876–00 | E – 8 |
| 5SL–25876–00 | E – 8 |
| 4P5–2587A–00 | D – 8 |
| 4P5–2588F–00 | E – 9 |
| 4P5–2588G–00 | C – 7 |
| 4P5–25894–00 | E – 13 |
| 4P5–25895–00 | E – 13 |
| 5VS–2589F–00 | E – 8 |
| 5VS–2589H–00 | E – 8 |

| CODIGO Nº | REF. Nº |
|---|---|
| 5SL–25914–00 | E – 6 |
| 5DH–25916–00 | E – 6 |
| 3JD–25917–00 | E – 6 |
| 5SL–25917–00 | E – 6 |
| 4SV–25919–00 | E – 3 |
| 5SL–25919–00 | E – 6 |
| 4P5–25921–50 | E – 6 |
| 4SV–25924–00 | E – 3 |
| 8CR–25924–00 | E – 6 |
| 3GM–25925–00 | E – 3 |
| 5SL–25926–00 | E – 6 |
| 1B3–26111–10 | E – 7 |
| 5PS–26133–20 | E – 7 |
| 4YR–26240–02 | E – 7 |
| 4YR–26241–02 | E – 7 |
| 51J–26246–01 | E – 7 |
| 1B3–26280–10 | E – 7 |
| 1B3–26290–10 | E – 7 |
| 1B3–26311–00 | E – 7 |
| 1B3–26312–00 | E – 7 |
| 5VS–26332–00 | E – 8 |
| 1B3–26335–00 | E – 7 |
| 371–27114–00 | D – 15 |
| 5VX–27114–00 | C – 14 |
| | E – 11 |
| 5VX–27200–00 | E – 13 |
| 5VX–27212–00 | E – 13 |
| 4BP–27222–01 | E – 13 |
| 5VX–27311–01 | E – 10 |
| 5VX–27315–00 | E – 10 |
| 5VX–27321–02 | E – 10 |
| 5VX–27351–00 | E – 10 |
| 3YX–27413–00 | E – 10 |
| 1HX–27415–00 | F – 5 |
| 4S8–27415–00 | C – 15 |
| | E – 11 |
| 4S8–2741L–00 | E – 11 |
| 4XV–27424–00 | C – 2 |
| 5VX–27424–00 | C – 14 |
| | E – 10 |
| 4S8–2742L–00 | E – 11 |
| 5LV–27431–01 | E – 11 |
| 4BP–27434–01 | C – 14 |
| 5JJ–27437–01 | E – 11 |
| 5LV–27441–01 | E – 11 |
| 5VX–27442–10 | C – 14 |
| 5VX–27443–10 | E – 10 |
| 4S8–27445–00 | C – 14 |

| CODIGO Nº | REF. Nº |
|---|---|
| 4S8–27446–00 | E – 11 |
| 4BH–27451–01 | E – 10 |
| 4BH–27461–01 | E – 10 |
| 5VX–28100–00 | D – 6 |
| 31A–28217–00 | D – 5 |
| 1B3–28307–00 | F – 5 |
| 1B3–28307–10 | F – 5 |
| 5VX–81410–00 | E – 15 |
| 5VX–81450–00 | E – 15 |
| 5VX–81670–00 | F – 8 |
| 5VX–81673–00 | F – 8 |
| 4WP–81801–00 | F – 2 |
| 5VX–81815–00 | F – 2 |
| 4WP–81826–00 | F – 2 |
| 4XV–8182A–00 | F – 2 |
| 4WP–81844–00 | F – 2 |
| 1FK–81847–00 | F – 2 |
| 5EB–81890–00 | F – 2 |
| 4BH–81940–02 | F – 9 |
| 5EA–81950–20 | F – 10 |
| 5VK–81950–30 | F – 10 |
| 5EA–81952–00 | F – 10 |
| 4P5–81953–00 | F – 9 |
| 5VX–81960–00 | F – 9 |
| 4TX–82100–02 | F – 9 |
| 5SL–82113–00 | F – 10 |
| 4P5–82115–00 | F – 9 |
| 4P5–82116–00 | F – 8 |
| 5VX–82122–00 | D – 2 |
| 5VX–82123–00 | F – 9 |
| 120–82131–00 | F – 11 |
| 122–82131–00 | D – 6 |
| 3TJ–82131–00 | D – 6 |
| 1AE–82151–00 | F – 9 |
| 5JJ–82151–20 | F – 9 |
| 5JJ–82151–30 | F – 9 |
| 5JJ–82151–60 | F – 9 |
| 4P5–82153–00 | F – 9 |
| 5VX–82310–00 | F – 8 |
| 5VX–82320–00 | F – 8 |
| 5VX–82370–00 | F – 8 |
| 3YA–82378–00 | F – 11 |
| 5VX–82380–00 | B – 13 |
| 5VX–82386–00 | B – 14 |
| 1B3–82509–00 | F – 3 |
| 5SL–82511–08 | F – 10 |
| 5VX–82530–00 | F – 8 |
| 3GB–82540–01 | F – 8 |

| CODIGO Nº | REF. Nº |
|---|---|
| 5VX–82541–00 | F – 8 |
| 1B3–8255P–00 | F – 10 |
| 5VS–82566–61 | F – 8 |
| 5PS–82576–01 | F – 10 |
| 5S4–82590–00 | F – 9 |
| 1UA–82591–00 | E – 8 |
| 1B3–82910–01 | F – 7 |
| 3YX–82917–01 | F – 7 |
| 5PW–83310–01 | F – 3 |
| 1KH–83311–00 | F – 3 |
| 5PW–83318–00 | F – 3 |
| 5PW–83320–01 | F – 3 |
| 5VX–83330–00 | F – 3 |
| 5PW–8333A–00 | F – 3 |
| 5VX–83340–00 | F – 3 |
| 5PW–8334A–00 | F – 3 |
| 3XV–83350–21 | F – 10 |
| 5MP–83371–00 | F – 10 |
| 5S2–83500–20 | F – 4 |
| 4XV–83513–00 | F – 5 |
| 2D1–83559–00 | F – 4 |
| 1B3–83599–00 | F – 5 |
| 5EB–83912–03 | F – 7 |
| 5JJ–83913–00 | F – 7 |
| 5VS–83922–00 | E – 8 |
| 437–83936–01 | F – 7 |
| 4XV–83945–00 | F – 7 |
| 5LV–83951–00 | F – 7 |
| 1B3–83969–01 | F – 7 |
| 5VX–83975–01 | F – 7 |
| 4HM–83980–00 | E – 8 |
| 1B3–84300–01 | F – 5 |
| 2F9–84314–00 | F – 5 |
| 1B3–8431R–00 | F – 5 |
| 5JW–84346–00 | F – 5 |
| 5DM–84347–00 | F – 5 |
| 5JW–84397–00 | F – 5 |
| 5VX–84710–00 | F – 6 |
| 137–84714–60 | F – 6 |
| 5VX–84735–00 | F – 6 |
| 4HC–84744–00 | F – 6 |
| 5VX–84745–01 | F – 6 |
| 3Y6–85130–02 | D – 6 |
| 5VX–85720–01 | F – 8 |
| 8CC–85790–01 | F – 8 |
| 2D1–85885–00 | B – 13 |
| 5CA–85886–00 | B – 12 |
| 5S2–8591A–00 | F – 10 |

INDICE NUMERICO

| CODIGO Nº | REF. Nº |
|---|---|
| 2D1–8592A–00 | C – 2 |
| 4P5–85930–09 | F – 11 |
| 5S2–85940–00 | F – 11 |
| 5S2–85970–00 | F – 11 |
| 4P5–85980–00 | F – 11 |
| 5VX–88158–00 | D – 5 |
| 5S5–F8199–S1 | D – 6 |
| 5VS–W0041–00 | E – 8 |
| 5VX–W0042–50 | E – 13 |
| 5VN–W0045–00 | E – 3 |
| 5VX–W0046–00 | E – 6 |
| 5SL–W0047–00 | E – 6 |
| 3GM–W0047–10 | E – 3 |
| 3MA–W0047–10 | E – 3 |
| 1J3–W0048–00 | E – 3 |
| 5VS–W0048–00 | E – 3 |
| 8CR–W0048–00 | E – 6 |
| 4SV–W0057–00 | E – 3 |
| 5SL–W0057–00 | E – 6 |
| 4SV–W0057–10 | E – 3 |
| 2TV–W2470–00 | D – 15 |
| 4P5–W2516–00–0X | E – 2 |
| 4P5–W2516–00–98 | E – 2 |
| 2B0–W2587–00 | E – 8 |
| 5S4–W8250–00 | F – 10 |
| 5VX–Y2410–30–W1 | D – 13 |
| 5VX–Y2410–30–W2 | D – 13 |
| 5VX–Y2410–30–X3 | D – 13 |
| 90101–08013 | E – 5 |
| 90105–05015 | E – 4 |
| 90105–06027 | B – 2 |
| 90105–06040 | E – 9 |
| 90105–06053 | B – 7 |
| 90105–060A6 | B – 9 |
| 90105–06145 | C – 4 |
| 90105–06557 | B – 8 |
| | D – 3 |
| | F – 8 |
| 90105–07004 | B – 6 |
| 90105–08021 | C – 2 |
| 90105–08063 | C – 2 |
| 90105–08113 | F – 8 |
| 90105–081A4 | E – 12 |
| 90105–086A9 | C – 4 |
| 90105–087A0 | C – 4 |
| 90105–10032 | D – 2 |
| 90105–10323 | D – 9 |
| 90105–10638 | E – 3 |

| CODIGO Nº | REF. Nº |
|---|---|
| 90105–10N53 | D – 2 |
| 90105–126A8 | E – 15 |
| 90109–06031 | B – 10 |
| | D – 5 |
| 90109–06055 | F – 10 |
| 90109–06060 | D – 2 |
| 90109–06168 | C – 4 |
| 90109–064G6 | E – 3 |
| 90109–066F0 | B – 2 |
| 90109–067F4 | D – 3 |
| 90109–08045 | E – 6 |
| 90109–080G5 | F – 10 |
| 90109–08174 | E – 10 |
| 90109–10011 | E – 10 |
| 90109–10654 | D – 9 |
| 90110–05014 | D – 13 |
| 90110–05112 | D – 13 |
| 90110–06018 | C – 13 |
| 90110–06022 | C – 6 |
| 90110–06079 | D – 13 |
| 90110–06086 | B – 7 |
| 90110–06161 | B – 10 |
| | C – 4 |
| 90110–06169 | B – 11 |
| 90110–08220 | E – 10 |
| 90110–10010 | E – 10 |
| 90110–10N52 | D – 11 |
| 90111–06019 | C – 15 |
| 90111–06031 | B – 8 |
| 90116–10485 | E – 4 |
| 90119–06044 | E – 13 |
| 90119–06062 | D – 13 |
| 90119–06096 | D – 8 |
| 90119–06117 | D – 8 |
| 90119–10003 | B – 2 |
| 90149–06019 | E – 15 |
| 90149–06023 | D – 3 |
| 90149–06082 | C – 4 |
| 90149–06250 | E – 15 |
| 90149–06302 | F – 5 |
| 90149–06308 | D – 15 |
| 90149–08003 | E – 15 |
| 90149–10006 | D – 2 |
| 90149–10012 | D – 2 |
| 90151–06008 | C – 11 |
| 90151–06018 | D – 3 |
| 90154–06061 | D – 5 |
| 90157–05079 | E – 10 |

| CODIGO Nº | REF. Nº |
|---|---|
| 90157–05134 | E – 11 |
| 90159–06002 | C – 9 |
| 90164–05014 | F – 4 |
| 90167–05076 | F – 4 |
| 90170–06228 | C – 14 |
| 90170–08010 | E – 13 |
| 90170–20008 | C – 9 |
| 90176–05001 | E – 11 |
| 90176–22081 | D – 10 |
| 90179–06403 | D – 5 |
| 90179–08410 | C – 2 |
| 90179–20011 | C – 12 |
| 90179–25033 | D – 10 |
| 90183–05061 | D – 5 |
| | F – 6 |
| 90183–06053 | D – 2 |
| 90183–060A1 | D – 2 |
| 90185–10002 | D – 2 |
| 90185–10009 | E – 4 |
| 90185–10037 | E – 10 |
| 90185–18167 | D – 8 |
| 90185–24007 | E – 4 |
| 90201–047A2 | F – 10 |
| 90201–05725 | D – 6 |
| 90201–06055 | D – 3 |
| 90201–06071 | F – 6 |
| 90201–06M30 | D – 3 |
| 90201–08034 | C – 2 |
| 90201–08083 | E – 13 |
| 90201–082U5 | C – 2 |
| 90201–08753 | F – 8 |
| 90201–08784 | C – 14 |
| 90201–087K3 | C – 4 |
| 90201–10020 | D – 2 |
| 90201–10021 | E – 4 |
| 90201–10119 | C – 9 |
| 90201–101J1 | D – 9 |
| 90201–12008 | E – 15 |
| 90201–12013 | C – 14 |
| 90201–12021 | E – 10 |
| 90201–12790 | F – 8 |
| 90201–14215 | E – 13 |
| 90201–15013 | C – 10 |
| 90201–154E8 | C – 14 |
| 90201–177G4 | C – 14 |
| 90201–18020 | D – 8 |
| 90201–20023 | C – 12 |
| 90201–20278 | C – 12 |

| CODIGO Nº | REF. Nº |
|---|---|
| 90201–220T0 | D – 10 |
| 90201–25020 | E – 5 |
| 90201–255A6 | C – 9 |
| 90202–08205 | F – 10 |
| 90202–24190 | D – 10 |
| 90202–26142 | D – 10 |
| 90206–12074 | C – 14 |
| 90209–08295 | E – 10 |
| 90209–21332 | C – 11 |
| 90209–21351 | C – 11 |
| 90209–22352 | C – 11 |
| 90209–25342 | C – 11 |
| 90209–25349 | C – 11 |
| 90209–25350 | C – 11 |
| 90215–20004 | C – 9 |
| 90240–08124 | E – 13 |
| 90269–06010 | F – 8 |
| 90269–08001 | D – 8 |
| 90269–08066 | D – 3 |
| 90338–06018 | D – 15 |
| 90338–08174 | B – 12 |
| 90338–08220 | D – 2 |
| 90338–21145 | D – 2 |
| 90340–14132 | B – 11 |
| 90340–20090 | B – 2 |
| 90340–32004 | C – 6 |
| 90383–14001 | E – 11 |
| 90387–06014 | E – 11 |
| 90387–06068 | D – 13 |
| 90387–06073 | B – 12 |
| 90387–06075 | D – 6 |
| 90387–06078 | D – 3 |
| 90387–06107 | D – 5 |
| | D – 7 |
| 90387–0614M | B – 8 |
| 90387–061N6 | C – 2 |
| 90387–061W6 | D – 13 |
| 90387–06372 | C – 15 |
| | D – 8 |
| 90387–065J6 | D – 5 |
| 90387–066H4 | B – 8 |
| 90387–082W9 | C – 2 |
| 90387–09003 | D – 5 |
| 90387–1012B | D – 9 |
| 90387–127V3 | C – 14 |
| 90387–22002 | E – 2 |
| 90387–2202V | C – 12 |
| 90387–25010 | C – 9 |

| CODIGO Nº | REF. Nº |
|---|---|
| 90387–2504A | C – 11 |
| 90387–2513E | C – 11 |
| 90387–253M6 | C – 11 |
| 90387–28001 | E – 4 |
| 90387–2813C | C – 11 |
| 90387–2813D | C – 11 |
| 90401–10020 | E – 8 |
| | E – 13 |
| 90401–10038 | E – 8 |
| 90401–20145 | B – 11 |
| 90430–06014 | B – 7 |
| 90430–08119 | B – 2 |
| 90430–08143 | C – 6 |
| 90430–09002 | B – 13 |
| 90430–10005 | E – 9 |
| | E – 13 |
| 90430–10148 | F – 8 |
| 90430–10171 | D – 11 |
| 90445–08025 | B – 9 |
| 90445–081F2 | B – 9 |
| 90445–10032 | D – 14 |
| 90445–10033 | D – 14 |
| 90445–10144 | F – 11 |
| 90445–11795 | B – 12 |
| 90450–22017 | B – 7 |
| | B – 9 |
| 90450–32001 | B – 7 |
| | B – 9 |
| 90450–32003 | B – 8 |
| 90450–35001 | B – 7 |
| | B – 8 |
| 90450–38040 | B – 7 |
| 90450–53002 | B – 12 |
| 90450–63003 | B – 12 |
| 90464–04003 | E – 8 |
| 90464–07012 | B – 9 |
| 90464–10233 | F – 11 |
| 90464–12013 | E – 8 |
| | F – 11 |
| 90464–12089 | F – 9 |
| 90464–12238 | B – 9 |
| 90464–13077 | F – 9 |
| 90464–13249 | F – 9 |
| 90464–14001 | D – 3 |
| 90464–14002 | D – 5 |
| 90464–14058 | F – 9 |
| 90464–15157 | D – 3 |
| | F – 5 |

| CODIGO Nº | REF. Nº |
|---|---|
| 90464–15192 | F – 9 |
| 90464–15195 | E – 9 |
| 90464–16001 | F – 9 |
| 90464–16005 | D – 13 |
| 90464–16006 | F – 9 |
| 90464–16061 | D – 15 |
| 90464–18002 | D – 5 |
| 90464–18029 | D – 6 |
| 90464–23041 | B – 14 |
| 90464–24002 | F – 7 |
| 90464–24230 | F – 10 |
| 90465–08045 | C – 6 |
| 90465–10030 | B – 11 |
| 90465–10042 | C – 6 |
| 90465–13152 | D – 6 |
| 90465–14011 | C – 6 |
| 90467–08075 | B – 9 |
| 90467–10008 | D – 14 |
| 90467–10041 | B – 12 |
| 90467–11090 | B – 9 |
| | B – 14 |
| 90467–120A3 | E – 13 |
| 90467–14015 | B – 12 |
| 90467–15054 | B – 12 |
| 90467–17003 | B – 15 |
| 90467–17089 | B – 12 |
| | B – 15 |
| 90467–17128 | B – 15 |
| 90467–200A0 | B – 9 |
| 90480–01558 | D – 7 |
| 90480–10332 | C – 2 |
| 90480–11005 | F – 9 |
| 90480–12006 | C – 2 |
| 90480–12072 | D – 5 |
| | F – 5 |
| 90480–12237 | D – 3 |
| 90480–12314 | B – 12 |
| 90480–13163 | D – 4 |
| 90480–13398 | D – 5 |
| 90480–14008 | F – 5 |
| 90480–15005 | D – 13 |
| 90480–15363 | B – 8 |
| 90480–18276 | F – 6 |
| 90501–064L1 | C – 13 |
| 90501–15001 | E – 11 |
| 90501–225A9 | C – 9 |
| 90506–14003 | C – 14 |
| 90506–20223 | E – 13 |

INDICE NUMERICO

| CODIGO Nº | REF. Nº |
|---|---|
| 90506–23007 | E – 10 |
| 90508–18016 | C – 10 |
| 90508–20572 | E – 10 |
| 90508–295B2 | C – 14 |
| 90560–06201 | D – 4 |
| 91312–06016 | F – 8 |
| 91312–06025 | B – 11 |
| 91312–10025 | D – 12 |
| 91314–06020 | C – 6 |
| 91314–06025 | B – 6 |
| | C – 4 |
| | C – 6 |
| 91314–06030 | C – 6 |
| 91314–06040 | E – 11 |
| 91314–06060 | B – 2 |
| 91314–08030 | D – 10 |
| 91314–08045 | D – 12 |
| 91314–10050 | D – 2 |
| 91317–04025 | F – 10 |
| 91317–05010 | D – 13 |
| 91317–06016 | F – 8 |
| 91317–06020 | B – 2 |
| | B – 12 |
| 91317–08030 | C – 2 |
| 91380–06012 | F – 8 |
| 91401–20012 | E – 13 |
| 91401–25015 | E – 10 |
| 91701–08040 | E – 10 |
| 91808–17032 | B – 10 |
| 92014–05012 | C – 15 |
| | E – 11 |
| 92014–05014 | E – 11 |
| 92014–06014 | F – 11 |
| 92014–06020 | E – 13 |
| 92014–08014 | C – 6 |
| 92014–08020 | E – 13 |
| 92014–08045 | C – 2 |
| 92017–05025 | F – 8 |
| 92017–06010 | F – 10 |
| 92017–06012 | D – 6 |
| 92017–06014 | D – 7 |
| 92017–06016 | D – 6 |
| 92017–06020 | D – 3 |
| 92902–04100 | E – 8 |
| 92902–04600 | E – 8 |
| 92904–05600 | B – 8 |
| 92907–05100 | B – 13 |
| 92907–05600 | B – 13 |

| CODIGO Nº | REF. Nº |
|---|---|
| 92907–06100 | B – 8 |
| 92907–06600 | B – 8 |
| | D – 8 |
| 92907–08600 | C – 9 |
| 92990–05200 | C – 15 |
| | E – 11 |
| 93101–12173 | B – 7 |
| 93102–12106 | C – 15 |
| 93102–15212 | C – 9 |
| 93102–35423 | C – 12 |
| 93106–28043 | E – 2 |
| 93106–40013 | E – 4 |
| 93109–17071 | D – 9 |
| 93210–04092 | C – 4 |
| 93210–06667 | B – 10 |
| 93210–09165 | B – 10 |
| | C – 5 |
| 93210–14003 | B – 10 |
| 93210–14579 | C – 4 |
| 93210–15566 | B – 11 |
| | F – 8 |
| 93210–16325 | C – 4 |
| 93210–27194 | C – 6 |
| 93210–32172 | C – 6 |
| 93210–33133 | B – 7 |
| 93210–34504 | D – 11 |
| 93210–46001 | B – 7 |
| 93306–00106 | B – 7 |
| 93306–00304 | C – 9 |
| 93306–00420 | E – 2 |
| 93306–20464 | C – 11 |
| 93306–20531 | E – 4 |
| 93306–30525 | C – 11 |
| 93306–30546 | C – 11 |
| 93310–340N8 | C – 9 |
| 93315–31502 | C – 9 |
| 93315–31758 | D – 9 |
| 93315–42523 | D – 8 |
| 93317–11096 | C – 9 |
| 93317–11295 | C – 15 |
| 93317–43580 | E – 4 |
| 93399–99931 | D – 10 |
| 93399–99932 | D – 12 |
| 93420–61M07 | E – 4 |
| 93440–10153 | B – 2 |
| 93440–25186 | C – 11 |
| 93440–28062 | C – 11 |
| 93450–17129 | B – 3 |

| CODIGO Nº | REF. Nº |
|---|---|
| 93501–04011 | E – 11 |
| 93607–44002 | B – 6 |
| 93608–17263 | C – 6 |
| 93900–00030 | E – 2 |
| | E – 4 |
| 94112–17066 | E – 2 |
| 94112–17067 | E – 2 |
| 94118–17041 | E – 4 |
| 94118–17053 | E – 4 |
| 94580–25080 | B – 10 |
| 94582–11118 | E – 4 |
| 94591–49120 | B – 6 |
| 94701–00403 | B – 2 |
| 95022–06016 | F – 8 |
| 95024–06020 | B – 7 |
| 95024–08035 | D – 10 |
| 95024–10020 | B – 9 |
| 95027–06008 | F – 9 |
| 95027–06010 | E – 9 |
| | E – 14 |
| 95027–06012 | D – 3 |
| 95027–06014 | F – 5 |
| 95027–06020 | E – 8 |
| | F – 7 |
| 95027–06025 | E – 9 |
| | E – 14 |
| 95027–06040 | F – 2 |
| 95027–08012 | B – 2 |
| 95302–08600 | E – 5 |
| 95304–06700 | C – 14 |
| 95602–06200 | D – 15 |
| 95604–06200 | E – 11 |
| 95607–05100 | C – 15 |
| | D – 6 |
| | E – 11 |
| 95607–05200 | F – 8 |
| 95607–06100 | F – 7 |
| 95607–10100 | D – 9 |
| 95607–10200 | D – 2 |
| | D – 9 |
| 95617–06100 | E – 8 |
| 95617–08625 | B – 2 |
| 95707–06500 | D – 15 |
| | F – 9 |
| 95807–06010 | E – 8 |
| 95807–06016 | D – 4 |
| 95807–06020 | F – 9 |
| 95807–06025 | D – 2 |

| CODIGO Nº | REF. Nº |
|---|---|
| 95812–06045 | C – 4 |
| 95812–06055 | C – 4 |
| 95812–06065 | C – 4 |
| 95812–06100 | C – 4 |
| 95812–08014 | C – 2 |
| 95812–08035 | C – 2 |
| 95812–08065 | C – 4 |
| 95814–08045 | C – 2 |
| 95817–06012 | D – 12 |
| | F – 5 |
| 95824–06012 | B – 8 |
| 95824–06020 | C – 14 |
| 95824–06030 | B – 8 |
| 95827–06010 | D – 4 |
| | F – 11 |
| 95827–06016 | D – 6 |
| 95827–06090 | D – 13 |
| 95827–08012 | D – 6 |
| 95827–08025 | D – 4 |
| | D – 5 |
| 97004–05012 | B – 8 |
| 97007–06025 | D – 8 |
| 97307–06012 | B – 8 |
| 97607–05255 | F – 7 |
| 97706–04012 | F – 3 |
| | F – 6 |
| 97707–40012 | D – 6 |
| 97707–50012 | D – 5 |
| 97707–50025 | B – 12 |
| 97707–60016 | F – 6 |
| 98502–04012 | E – 8 |
| 98507–04010 | F – 7 |
| 98507–05010 | B – 13 |
| 98507–05016 | B – 13 |
| 98507–05020 | F – 7 |
| 98507–05030 | F – 7 |
| 98507–05045 | F – 7 |
| 98507–06008 | E – 11 |
| 98507–06012 | B – 13 |
| | C – 6 |
| 98704–03020 | F – 7 |
| 98902–06020 | C – 3 |
| 98907–05008 | D – 13 |
| 98907–05012 | D – 5 |
| 98907–05014 | F – 6 |
| 98907–06012 | D – 6 |
| 99001–07600 | C – 9 |
| 99009–10400 | C – 9 |

| CODIGO Nº | REF. Nº |
|---|---|
| 99009–12400 | B – 7 |
| 99009–17400 | C – 14 |
| 99530–08012 | C – 6 |
| 99530–10014 | C – 4 |
| 99530–10114 | B – 2 |

| CODIGO Nº | REF. Nº |
|---|---|